Programmable Logic Controller

XGB Series

LSIS

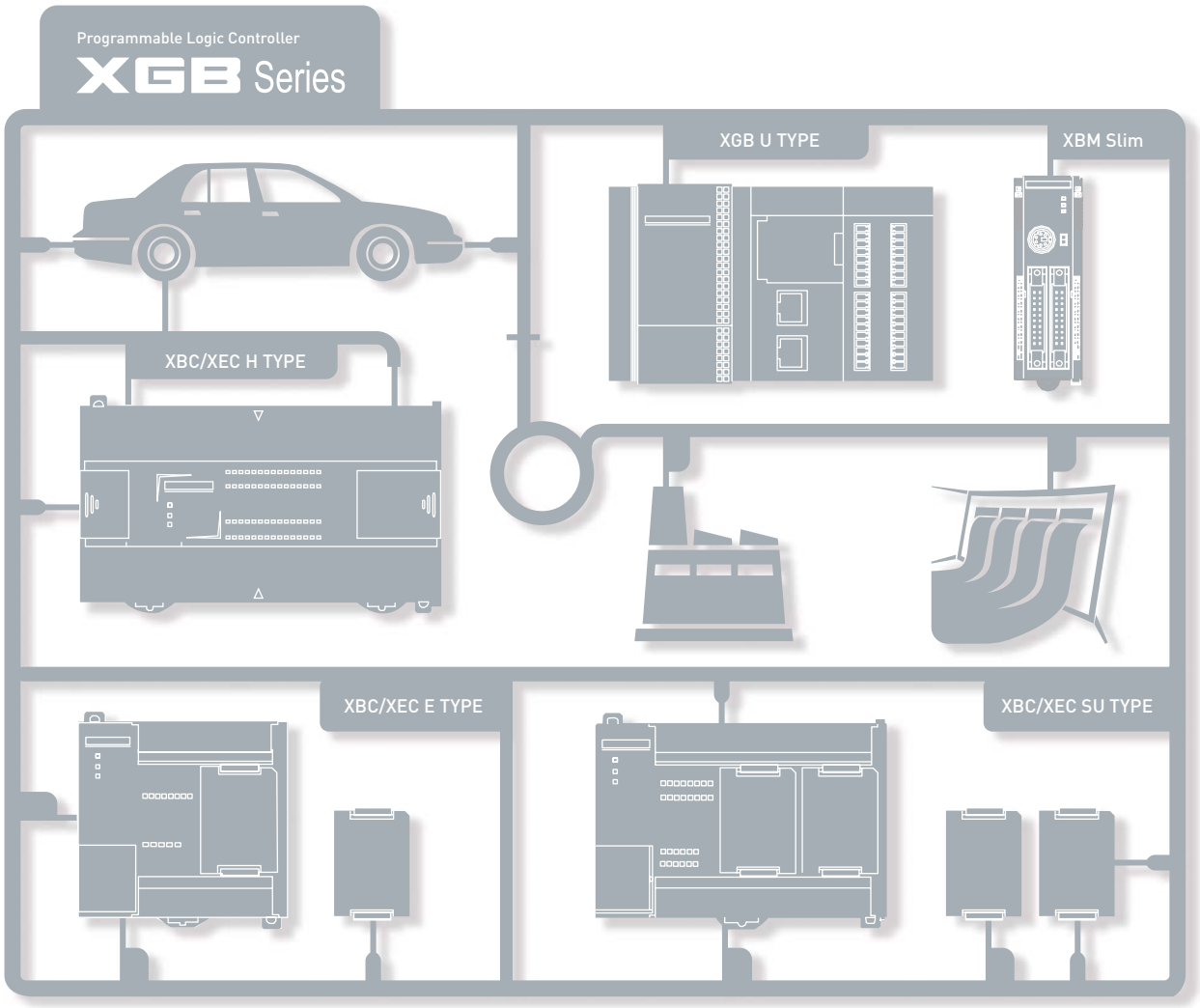

EASINESS
COMPACTNESS
FUNCTIONALITY
CONVENIENCE
HIGH PERFORMANCE

Programmable Logic Controller

XGB Series

URES
4 ~ 15

FEATURES

XBC/XEC U
16 ~ 23

XGB U

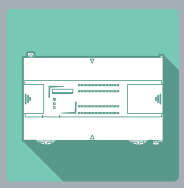

XBC/XEC H
24 ~ 29

XBC/XEC H

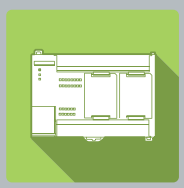

XBC/XEC SU
30 ~ 33

XBC/XEC SU

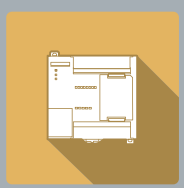

XBC/XEC E
40 ~ 47

XBC/XEC E

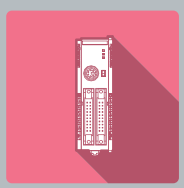

XBM Slim
48 ~61

XBM Slim

APPLICATION
62 ~ 120

APPLICSTION

All-In-One PLC

With Next Generation Technology

XGB

XGB is a micro PLC that offers maximum performance at minimum cost.

With its high functionality, XGB supports from simple control system to complex task.

Strengthening its communication functions, XGB offers user-oriented integrated control.

Based on its strengths, XGB can be used in many application fields.

Series

It's Slim
It's Powerful

It's Slim

Item Size (W×H×D)	XBC/XEC U Type (Standard)	XBC/XEC H Type	XBC/XEC SU Type	XBC/XEC E Type	XBM Slim Type
Size (W×H×D)	150×64×90	114×64×90	135×64×90	100×64×90	30×60×90

Expansion	Special Module	Communication Module
Size (W×H×D)	20×63×90	27×63×90

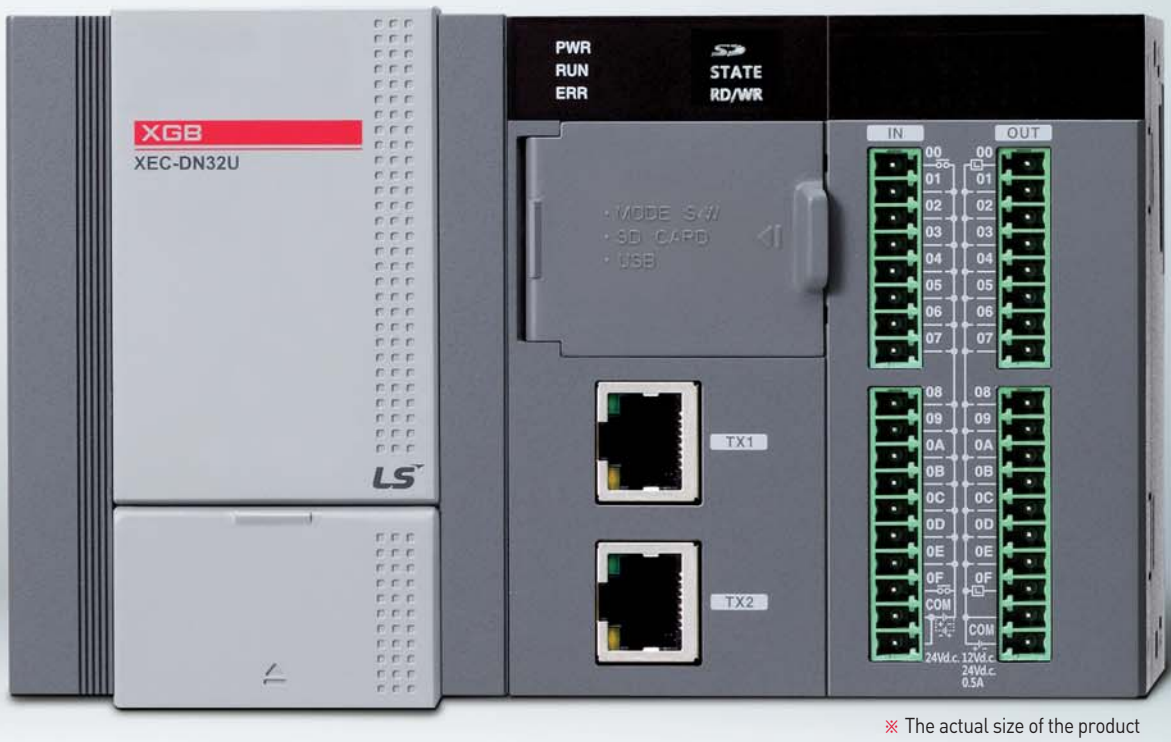

※ The actual size of the product

It's Powerful

- Ethernet 1 Ch. (Dual Port)
- RS-232C 1 Ch.
- RS-485 1 Ch.
- PID
- Web Server
- Data Log
- USB
- Pulse catch
- High speed counter 8 Ch. HSC
- Analog input/ output 8 Ch. IN OUT
- Positioning 4 axes
- External interrupt

※ XBC/XEC U Type

What you have dreamed of, we make it happen.

XGB U sets new standards in **Ultimate performance** with its many innovations

IoT (Internet of Things) realizes smart factories

XGB-U is a **user-oriented** controller

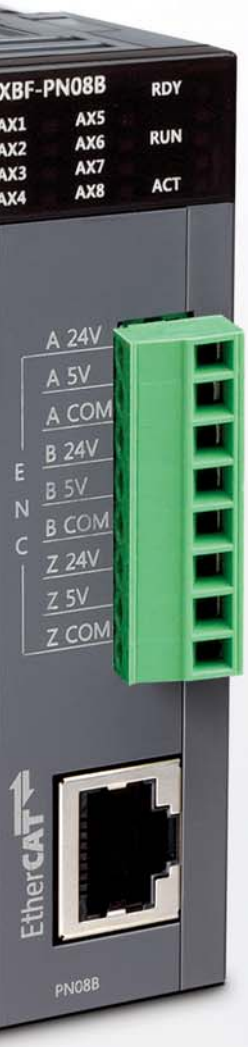

Various Expansion

- Compatible with XGB expansion modules
- Max. 2 High speed backplane expansion modules
- Max. 10 expansion modules
- Max. 352 I/O points
- Expansion I/O module
  - DC24 input, Transistor output, Relay output
- Special module
  - Analog input, Analog output, RTD, Thermocouple, High-speed counter, Positioning (Line drive 2 axes, EtherCAT network 8 axes)
- Communication modules
  - RS-232C, RS-422/485, Ethernet, CANopen (Master/Slave), Profibus-DP (Master/Slave), DeviceNet (Slave), EtherNet/IP, RAPIEnet

Expansion(XBC/XEC U Type)

- Max. 10 expansion modules
  - Max. 2 High speed backplane modules
  - Max. 2 Communication modules

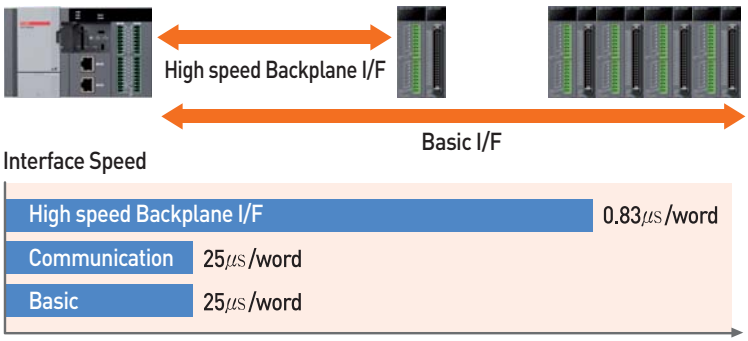

Data Log

- Easy parameter set up for [General save], [Trigger save], [Event save] without instruction
- 16GB of operation data storable
- Additional function
  - SD memory format, FTP link, Diagnosis, Sending email attached with a data log file
  - PLC program upload/download
  - O/S update

Dual Port Ethernet(XBC/XEC U type)

- 2 ports unmanaged Ethernet switch support
- Cost saving through simple wiring
- FTP server support (Data logging)

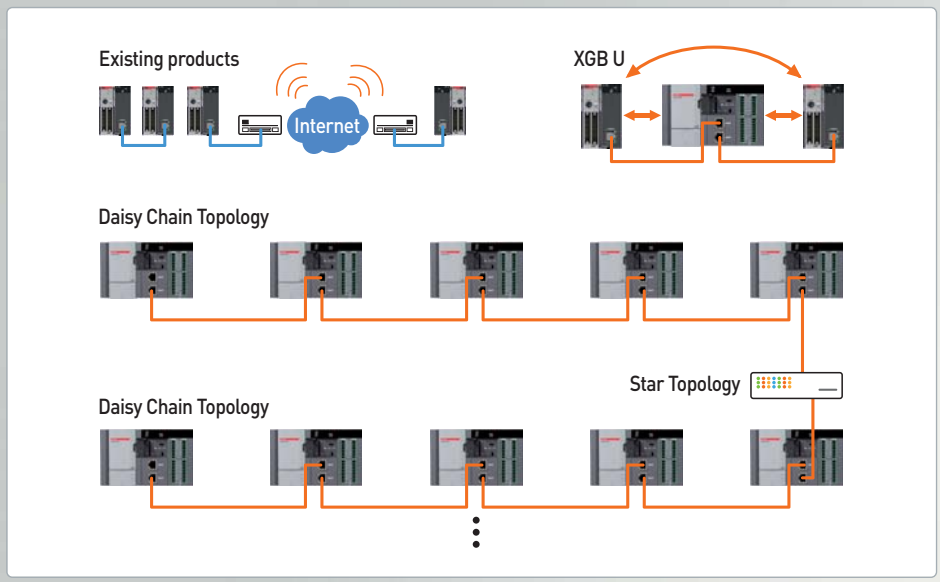

Web Server

- Monitoring of PLC information and data through web browser (PLC basic info., module info., diagnosis, device monitoring, flag monitoring, data log file download, O/S update, ladder program update, etc.)
- Time synchronization by setting basic parameters (SNTP: Simple Network Time Protocol)
- Email service through commercial email (SMTP: Simple Mail Transfer Protocol)

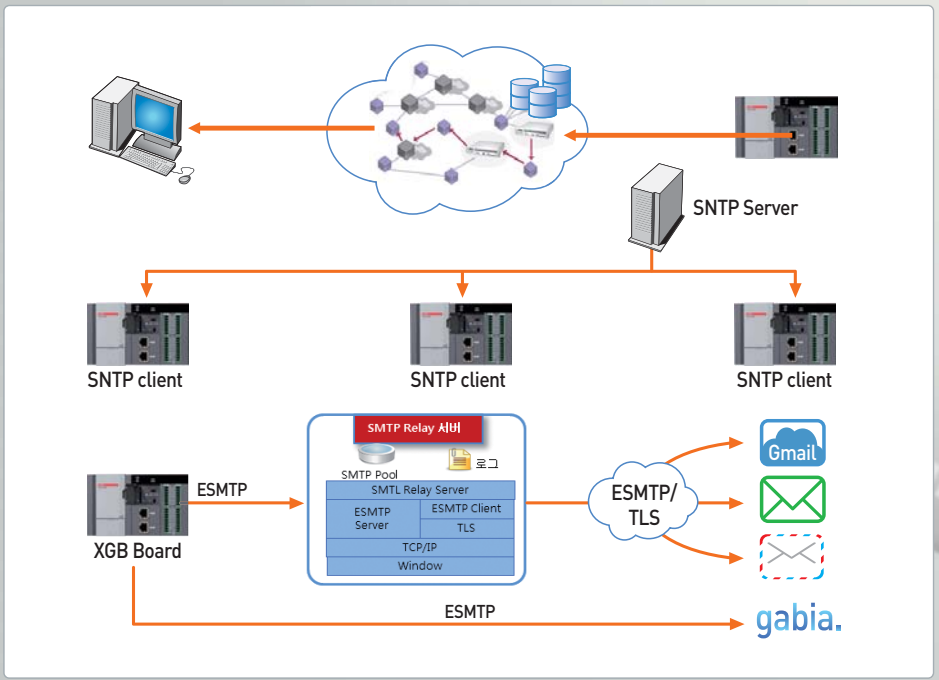

Ultimate Performance
Universal IoT
User Oriented

U will experience the utmost efficiency for your applications with U's outstanding features

Powerful built-in function

Built-in high speed counter

Phase	XBC/XEC				XBM
	U	H	SU	E	
1 Phase	100kHz(8Ch)	100kHz(4Ch)	100kHz(2Ch)	4kHz	20kHz
		20kHz(4Ch)	20kHz(6Ch)		
	8Ch	8Ch	8Ch	4Ch	4Ch
2 Phase	50kHz(4Ch)	50kHz(4Ch)	50kHz(1Ch)	2kHz	2 multiplication: 10kHz 4 multiplication: 8kHz
		10kHz(4Ch)	8kHz(3Ch)		
	4Ch	4Ch	4Ch	2Ch	2Ch

Built-in PID function

- It supports built-in PID control function up to 16 loops.
  - It provides parameter setting using XG5000, convenient loop state monitoring through trend monitor.
  - It can simply get a coefficient value by improved auto-tuning algorithm
  - Control accuracy improvement by using various additional functions such as PWM output, ⊿MV, ⊿PV, SV Ramp, etc.
  - It provides various control modes such as forward/reverse mixed operation, 2-stage SV PID control, cascade control, etc.
  - Various alarm functions such as MV high/low limit, PV high/low limit, PV variation

Built-in analog I/O function (Available for XBC/XEC-DN32UA type only)

- Built-in analog input 4 channels (voltage/current, 14bit)
- Built-in analog output 4 channels (voltage/current 14bit)

Built-in position control function (Available for XBC/XEC-DN32UP type only)

- Line drive output positioning function with up to 2Mpps 4-axis
- Parameter set up by XG-PM providing operation data edition, divers monitoring and diagnosis functions.

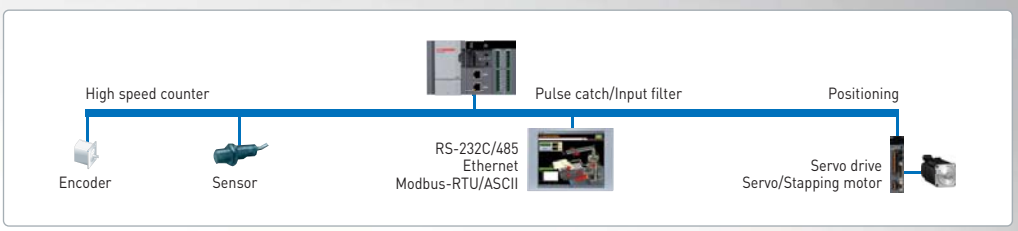

With its high-speed processing and system capability, XGB offers the utmost efficiency for your applications.

XBC/XEC U

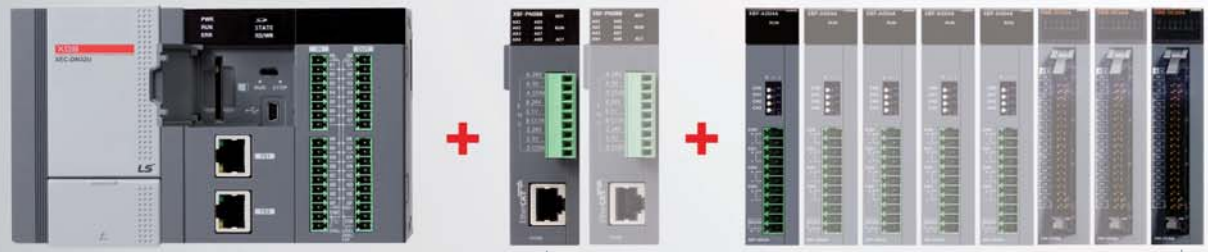

Standard type

Max. 10 stages (High speed interface module : Max. 2 stages)

XBC/XEC H

Max. 10 stage (Including communication 2 stages)

XBC/XEC SU

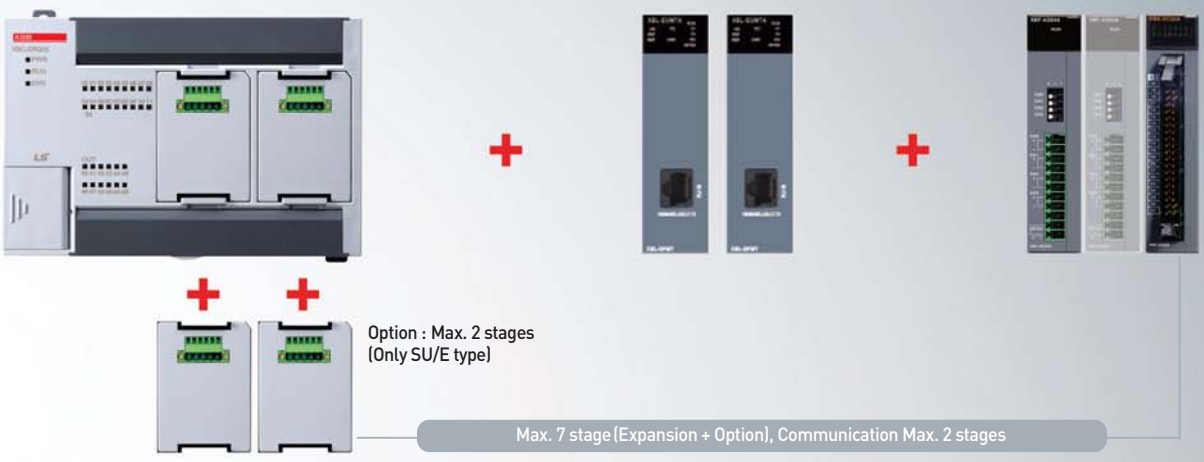

XBC/XEC E

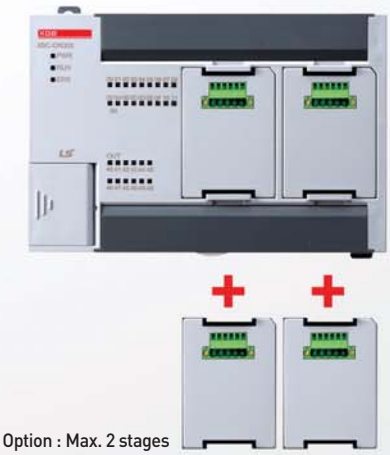

Option modules	
XBO-M2MB	Memory / program READ/WRITE
XBO-RTCA	RTC (Real time clock), Battery
XBO-DC04A	DC 24V, Input 4 points
XBO-TN04A	TR (Sink), Output 4 points
XBO-AD02A	Voltage/Current, Input 2ch
XBO-DA02A	Voltage/Current, Output 2ch
XBO-AH02A	Voltage/Current, Input 1ch / Voltage/Current, Output 1ch
XBO-RD01A	RTD (Resistance temperature detector), Input 1ch
XBO-TC02A	TC (Thermo couple), Input 2ch

XBM Slim

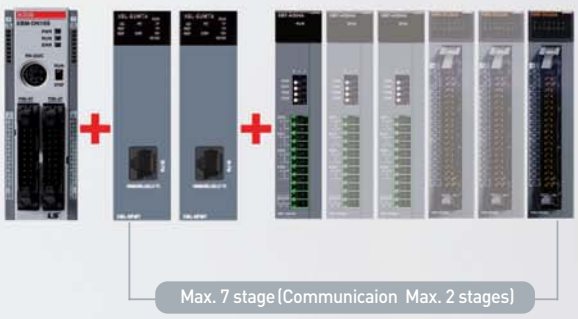

XBM/XEM H, H2, HP

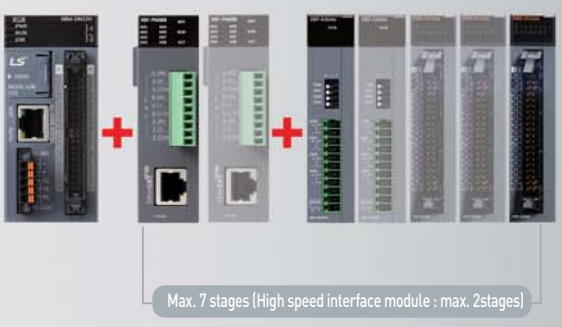

XGB U

Ultimate Performance
Universal IoT
User Oriented

Contents

General specifications 18
Performance specifications 19
Wiring 23

XGB
XEC-DN32UA
PWR
RUN
ERR
STATE
RD/WR
A/D
D/A
IN
OUT
TX1
XGB
XEC-DN32U
TX2
AX3
AX4
AX1
AX2

Block type unit
(U, H, SU, E)

Item	Descriptions				Standard
Ambient temperature	0 ~ 55 °C				
Storage temperature	-25 ~ +70 °C				
Ambient humidity	5 ~ 95%RH (Non-condensing)				
Storage humidity	5 ~ 95%RH (Non-condensing)				
Vibration resistance	Occasional vibration			10 times each direction (X, Y and Z)	IEC61131-2
	Frequency	Acceleration	Pulse width		
	10 ≤ f < 57Hz	–	0.075mm		
	57 ≤ f ≤ 150Hz	9.8m/s² (1G)	–		
	Continuous vibration				
	Frequency	Acceleration	Pulse width		
	10 ≤ f < 57Hz	–	0.035mm		
	57 ≤ f ≤ 150Hz	4.9m/s² (0.5G)	–		
Shock resistance	• Peak acceleration: 147m/s² (15g) • Duration: 11ms • Pulse waveform: Half-sine, 3times each direction per each axis				IEC61131-2
Noise resistance	Square wave impulse noise	±500 V			LSIS Standard
	Electrostatic discharge	4kV			IEC61131-2 IEC61000-4-2
	Radiated electromagnetic field noise	80 ~ 1000MHz, 10V/m			IEC61131-2 IEC61000-4-3
	Fast transient/ Burst noise	Main unit	Expansion module		IEC61131-2 IEC61000-4-4
		2kV	1kV		
Operating ambience	Free from corrosive gases and excessive dust				
Altitude	Up to 2,000m				
Pollution level*1)	Less than 2				
Cooling	Air-cooling				

*1) Pollution level indicates the degree to which conductive material is generated in the environment where the equipment is used. Pollution level 2 is the condition that only non-conductive pollution occurred but temporary conductivity may be produced due to condensing.

XBC U

Performance specifications

Item		Specifications						Remark
		XBC-DN(P)32U	XBC-DR28U	XBC-DN(P)32UA	XBC-DR28UA	XBC-DN(P)32UP	XBC-DR28UP	
Program control method		Cyclic execution of stored program, Time-driven interrupt, Process-driven interrupt						
I/O control method		Batch processing by simultaneous scan (Refresh method), Directed by program instruction						
Program language		Ladder Diagram, Instruction List						
Number of instructions	Basic	28						
	Application	677						
Processing speed (Basic instruction)		60ns/step						
Program capacity		32Kstep						
Max. I/O points		352points	348points	352points	348points	352points	348points	Main + 10 expansioons
Data area	P	P00000 ~ P2047F(32,768 point)						Input/Ouput
	M	M00000 ~ M2047F(32,768 point)						
	K	K00000 ~ K8191F(131,072 point)						
	L	L00000 ~ L4095F (65,536 point)						Link
	F	F00000 ~ F2047F (32,768 point)						Flag
	T	100ms, 10ms, 1ms: T0000 ~ T2047 (2,048 point)						Timer
	C	C000 ~ C2047 (2,048 point)						Counter
	S	S00.00 ~ S127.99						Step
	D	D00000 ~ D19999(20000word)						Data register
	U	U00.00 ~ U0B.31 (384 word)						Analog Data
	Z	Z000~Z127 (128 word)						
	N	N0000~N10239(10,240 word)						
File register	R	RAM area 2 block (R0 ~ R16,383)						
		FLASH area : 4 block (128Kbyte)						
Total program		256						
Initial task	Initial task	1						
	Cyclic task	Max 16						
	I/O task	Max 8						
	Internal device task	Max 16						
	High Speed Counter task	Max 8						
Operation mode		RUN, STOP, DEBUG						
Self-diagnosis function		Detects errors of scan time, memory, I/O and power supply						
Program port		USB 1 channel, Ethernet						
Retain data at power failure		Latch area setting in basic parameter						
Internal consumption current		700mA	990mA	780mA	1,040mA	1,250mA	1,550mA	
Weight		571g	630g	683g	732g	673g	722g	

*1) Auto-MDIX (Automatic medium-dependent interface crossover) :
It is the function to automatically detect whether the cable connected to the Ethernet port is peer-to-peer(straight) or cross cable

XEC U

Performance specifications

Item			Specifications						Remark
			XEC-DN(P)32U	XEC-DR28U	XEC-DN(P)32UA	XEC-DR28UA	XEC-DN(P)32UP	XEC-DR28UP	
Program control method			Cyclic execution of stored program, Time-driven interrupt, Process-driven interrupt						
I/O control method			Batch processing by simultaneous scan (Refresh method), Directed by program instruction						
Program language			Ladder Diagram, Instruction List, SFC, ST						
Number of instructions	Operator		18						
	Basic function		136 + Floating-point Arithmetic Functions						
	Basic function block		43						
	Special function block		Each special module has own special function blocks						
Processing speed (Basic instruction)			60ns/step						
Program memory			384Kbyte						
Max. I/O points			352points	348points	352points	348points	352points	348points	Main + 10 expansioons
Data area	Symbolic variable(A)		64KB (Retain setting available)						
	Input variable(I)		2KB						
	Output variable(Q)		2KB						
	Direct variable	M	32KB (Retain setting available)						
		R	32KB * 2blocks						
		W	64KB						Same area with R
	Flag variable	F	4KB						System flag
		K	16KB						Keep relay
		L	8KB						Link relay
		U	768 Byte						Analog data refresh area
		N	20KB						P2P parameter
Flash area			4blocks (128Kbyte)						Using R device
Timer			No limit in points (Time range: 0.001~ 4,294,967.295)						
Counter			No limit in points (Counter range: 64 bit range)						
Total program			256						
Initial task	Initial task		1						
	Cyclic task		Max 16						
	Initial task		1						
	Cyclic task		Max 16						
	I/O task		Max 8						
	Internal device task		Max 16						
	High Speed Counter task		Max 8						
Operation mode			RUN, STOP, DEBUG						
Self-diagnosis function			Detects errors of scan time, memory, I/O and power supply						
Program port			USB 1 channel						
Retain data at power failure			Latch area setting in basic parameter						
Internal consumption current			700mA	990mA	780mA	1,040mA	1,250mA	1,550mA	
Weight			571g	630g	683g	732g	673g	722g	

Built-in function

Item		Specifications						Remark
		XBC/XEC-DN(P)32U	XBC/XEC-DR28U	XBC/XEC-DN(P)32UA	XBC/XEC-DR28UA	XBC/XEC-DN(P)32UP	XBC/XEC-DR28UP	
PID control		Control by instruction, auto-tunning, PWM output, Forced output, Operation scan time setting, Antiwindup, Delta MV, PV tracking, Hybrid operation, Cascade operation						
Seria	Protocol	Dedicated protocol, Modbus protocol User defined protocol , LS bus(inverter protocol)						Embedded00 P2P:01
	Channel	RS-232C 1 port and RS-485 1 port						
Ethernet	Transfer spec	Cable: 100Base-TX Speed: 100Mbps Auto-MDIX *1 IEEE 802.3						
	Topology	Line, star						
	Diagnosis	Module information, service condition						
	Protocol	XGT dedicated Modbus TCP/IP user define frame						Embedded01 P2P:02 High-speed link:01
	Service	P2P, High Speed link, Remote connection						
Datalog	Group	Max 10 group						
	Data set	32 per group						
	Extension	csv file						
	File size	Max 16Mbyte						
	SD memory type	SD,SDHC type(Recommand: SanDisk,Transcend)						
	Memory size	Max 16GB						
	File system	FAT32						
High Speed Counter	Performance	1-phase : 100KHz 8 channels 2-phase : 50KHz 4 channels						
	Counter mode	4 counter modes are supported based on input pulse and INC/DEC method • 1 pulse operation Mode : INC/DEC count by program • 1 pulse operation Mode : INC/DEC count by phase B pulse input • 2 pulse operation Mode : INC/DEC count by input pulse • 2 pulse operation Mode : INC/DEC count by difference of phase						
	Function	• Internal/external preset • Latch counter • Compare output • No. of rotation per unit time						

*1) Auto-MDIX(Automatic medium-dependent interface crossover) : It is the function to automatically detect whether the cable connected to the Ethernet port is peer-to-peer(straight) or cross cable

XEC U

Positioning

Item	Specifications	Remark
Basic Function	No. of control axi: 4axis Control Method:Position, Speed, Speed/Position,Feed Control Control Unit: Pulse ,mm, inch, degree Positioning Data: Each axis can have up to 400 data(Step number:1~400) Operation pattern: End, Keep, Continuous Operation method: Singular, Repeat	Available On UP type
interpolation	2/3/4 axis linear interpolation 2 axis circular interpolation 3 axis helical interpolation	
Positioning	Method: Absolute/Incremental method Address range: 2,147,483,648~2,147,483,647 Speed: Max 2Mpps(1~2,000,000pps) Acc /Dec process: Trapezoid type, S-type	
Homing method	DOG+HOME(Off), DOG+HOME(On), Upper limit + HOME,DOG, High speed, Upper/Lower limit, HOME	
Manual operation	Jog operation, MPG operation, Inching operation	
Encoder input	Line drive(RS-422A) input 1Channel(Max 200kpps)	

Analog

Item			Specifications		Remark
Analog input	**Channels**		4channels (current/voltage)		Available On UP type
	Specification	Input Range	Voltage: 1~5V, 0~5V, 0~10V, -10~10V, Current: 4~20㎃,0~20㎃		
			Current input or Voltage input can be selected through the external terminal wiring setting.		
		Input resistance	1㏁ or more(voltage input), 250Ω (current iput)		
		Max.Resolution	1/16000		
			0.250mV(1 ~ 5V), 0.3125mV(0 ~ 5V) 0.625mV(0 ~ 10V), 1.250mV(±10V)	1.0㎂ (4 ~ 20㎃) 1.25㎂ (0 ~ 20㎃)	
		Accuracy	±0.2% or less (When ambient temperature is 25℃) ±0.3% or less (When ambient temperature is 0 ~ 55℃)		
Analog output	**Channels**		Voltage 2 channels ,Current 2 channels		
	Specification	Output Range	Voltage: 1~5V, 0~5V, 0~10V, -10~10V, Current: 4~20㎃,0~20㎃		
			Output ranges are set in user program or I/O parameter per each channel.		
		Load resistance	1㏁ or more(voltage output), 600Ω or less(current output)		
		Max.Resolution	1/16000		
			0.250mV(1 ~ 5V), 0.3125mV(0 ~ 5V) 0.625mV(0 ~ 10V), 1.250mV(±10V)	1.0㎂ (4 ~ 20㎃) 1.25㎂ (0 ~ 20㎃)	
		Accuracy	±0.2% or less (When ambient temperature is 25℃) ±0.3% or less (When ambient temperature is 0 ~ 55℃)		

XBC-DN(P)32U
(16 point input)

Circuit configuration

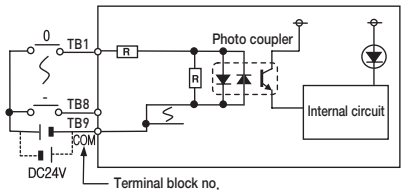

No.	Contact	No.	Contact
TB1	0	TB1	8
TB2	1	TB2	9
TB3	2	TB3	A
TB4	3	TB4	B
TB5	4	TB5	C
TB6	5	TB6	D
TB7	6	TB7	E
TB8	7	TB8	F
		TB9	COM
		TB10	COM

Type

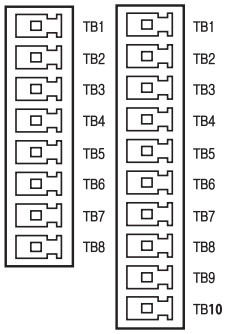

XBC-DN32U
Transistor output
(Sink type)

Circuit configuration

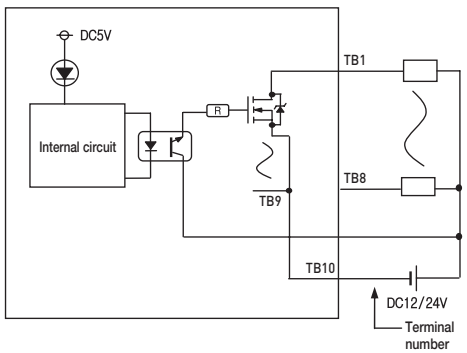

No.	Contact
TB1	0
TB2	1
TB3	2
TB4	3
TB5	4
TB6	5
TB7	6
TB8	7
TB1	8
TB2	9
TB3	A
TB4	B
TB5	C
TB6	D
TB7	E
TB8	F
TB9	DC12/24V
TB10	COM

Type

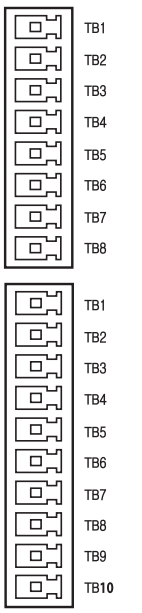

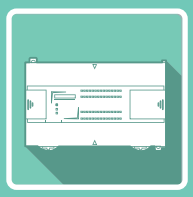

XBC/XEC H

High Performance

Contents

Performance specifications 26
Wiring 27

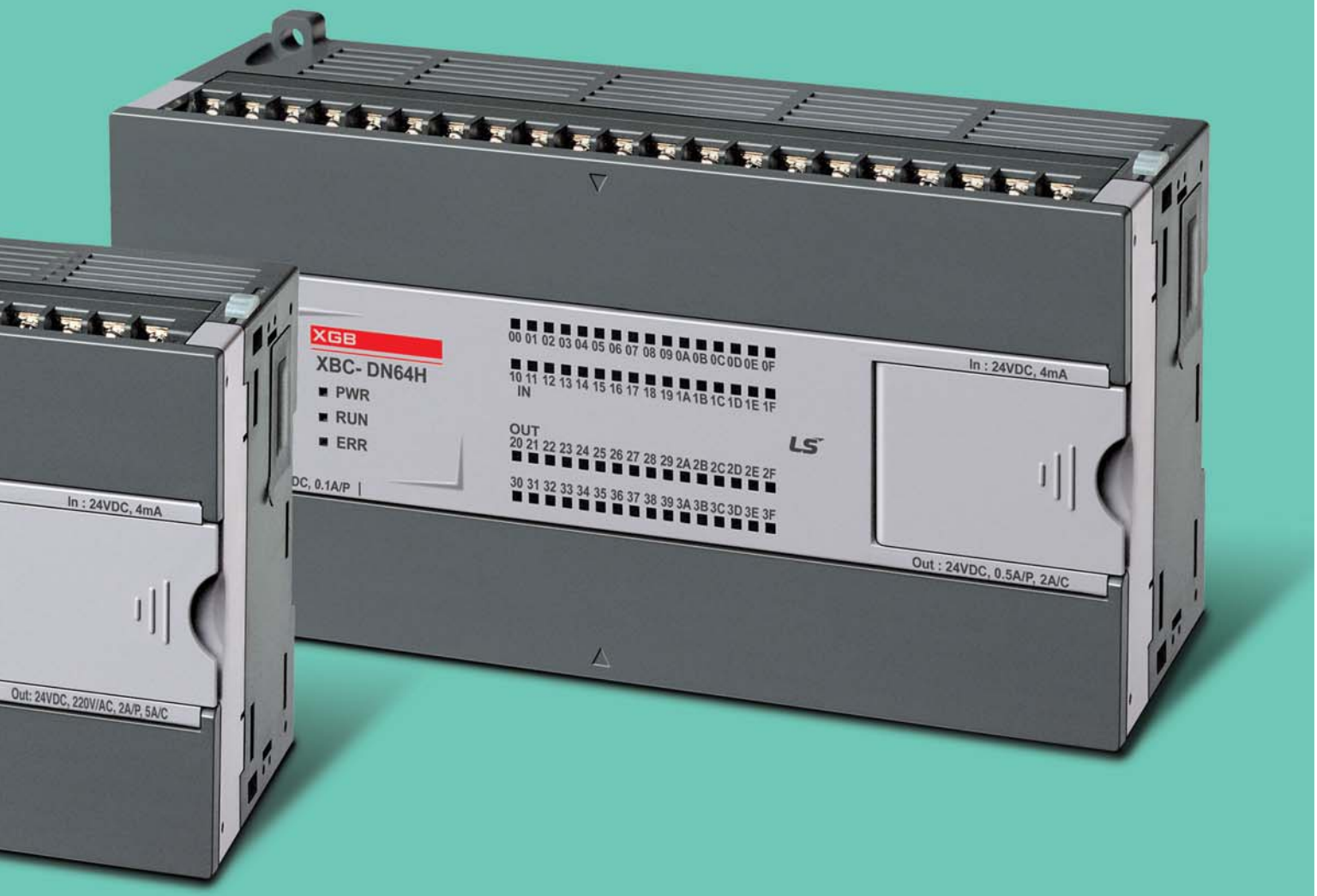
XGB
XBC- DN64H
PWR
RUN
ERR
00 01 02 03 04 05 06 07 08 09 0A 0B 0C 0D 0E 0F
10 11 12 13 14 15 16 17 18 19 1A 1B 1C 1D 1E 1F
IN
OUT
20 21 22 23 24 25 26 27 28 29 2A 2B 2C 2D 2E 2F
30 31 32 33 34 35 36 37 38 39 3A 3B 3C 3D 3E 3F
In : 24VDC, 4mA
Out : 24VDC, 0.5A/P, 2A/C
In : 24VDC, 4mA
Out: 24VDC, 220V/AC, 2A/P, 5A/C

High performance type

Performance specifications

Item	XBC/XEC-DR32H XBC-DR32H/DC*1) XEC-DR32H/DI	XBC/XEC-DN32H XEC-DP32H*1) XBC-DN32H/DC	XBC/XEC-DR64H XBC-DR64H/DC*1) XEC-DR64H/DI	XBC/XEC-DN64H XEC-DP64H*1) XBC-DN64H/DC
Control method	Repetitive, cyclic, interrupt, constant scan			
I/O control method	Refresh mode (Batch processing by scan synchronization), Direct mode by instruction			
Programming language	Ladder diagram or IEC standard (LD, SFC, ST)*1)			
Processing speed	83 ns / Step			
Program capacity	15Kstep (IEC type: 200KB)			
Main unit I/O points	32 (Input:16, Output:16)	32 (Input:16, Output:16)	64 (Input: 32, Output: 32)	64 (Input: 32, Output: 32)
Max. I/O points (Main + Expansion 10 stages)	352 points		384 points	
Total program	128			
Operation mode	RUN, STOP, DEBUG			
Self diagnosis	Detects errors of scan time, memory error, I/O error, battery error, power error, etc.			
Program port	USB (Rev 1.1), RS-232C 1 channel (Loader)			
Retain data at power failure	Latch area setting at basic parameter			
Built-in functions	RS-232C / RS-485 (2 ch), Pulse catch, Input filter, External interrupt, PID control, High-speed counter, Positioning, RTC			

Data memory				
XBC		XEC (IEC type)		
P	P0000 ~ P1023F (16,384 points)	Symbolic variable	A	32KB (Max. 16KB retain setting available)
M	M0000 ~ M1023F (16,384 points)	Input variable	I	2KB (%IX 15.15.63)
K	K0000 ~ K4095F (65,536 points)	Output variable	Q	2KB (%QX 15.15.63)
L	L0000 ~ L2047F (32,768 points)	Direct variable	M	16KB (Max. 8KB retain setting available)
F	F0000 ~ F1023F (16,384 points)		R	20KB (1 block)
T	100ms, 10ms, 1ms: T0000 ~ T1023 (1,024)(Adjustable by parameter setting)		W	20KB
C	C0000 ~ C1023 (1,024)	Flag variable	F	2KB
S	S00.00 ~ S127.99		K	8KB
D	D0000 ~ D10239 (10,240 word)		L	4KB
U	U00.00 ~ U0A.31 (Analog data refresh area: 352 word)		N	10KB
Z	Z000 ~ Z127 (128 word)		U	1KB
N	N000 ~ N5119 (5,120 word)	Flash area	R	20KB (2 blocks)

*1) XEC is IEC standard language programming.

XBC/XEC-DN(R)32H
XBC/XEC-DN/DR/DP32H
Input wiring
(sink/source type)

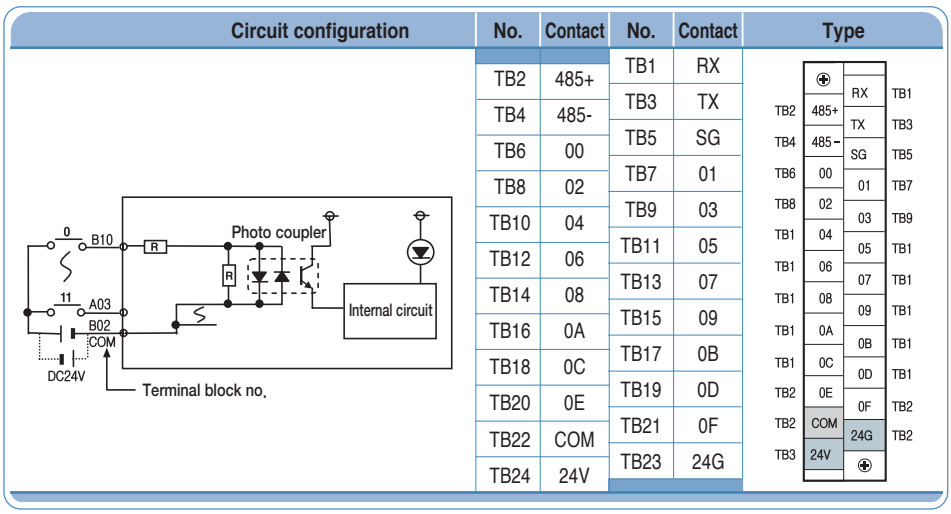

XBC/XEC-DR32H
Relay output wiring type

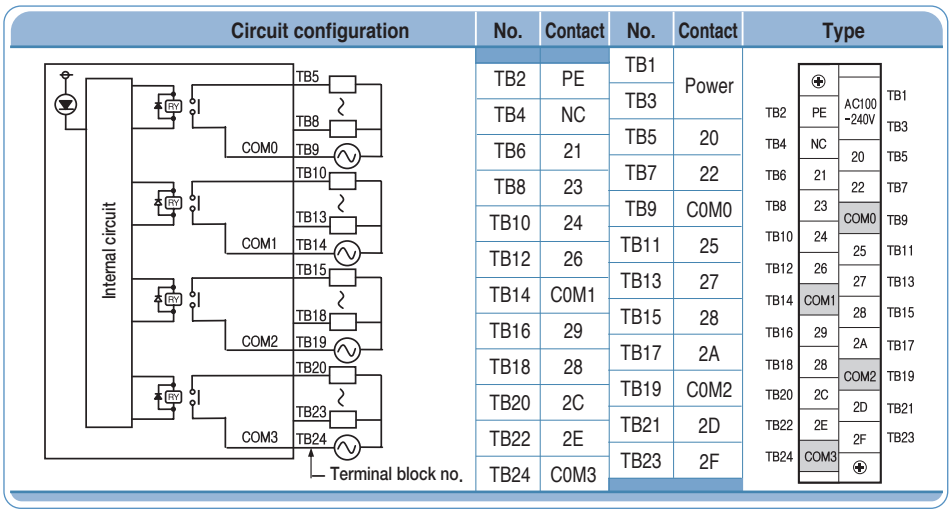

XBC/XEC-DN32H
Transistor output wiring
(sink type)

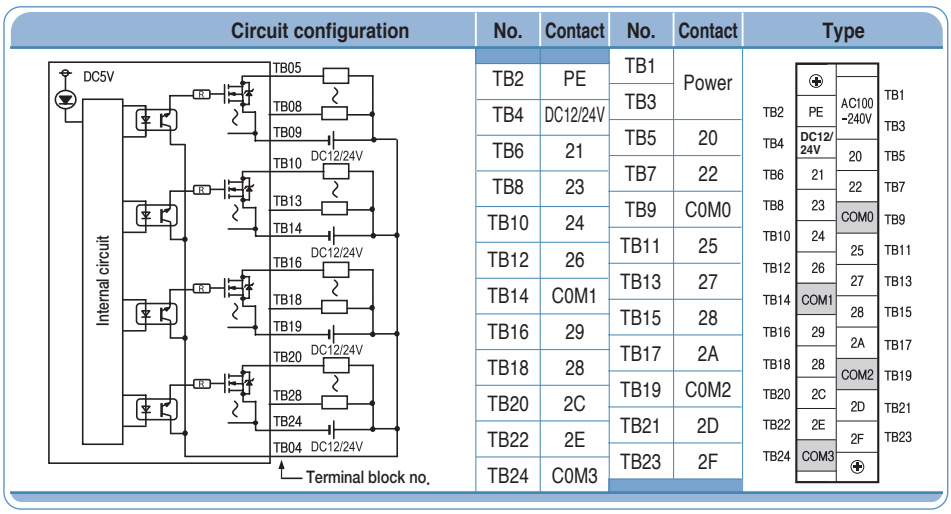

* XBC input : P00~P1F, XEC input : I00~I31 * XBC output : P21~P3F, XEC output : Q00~Q31

XEC-DP32H
Transistor output wiring
(source type)

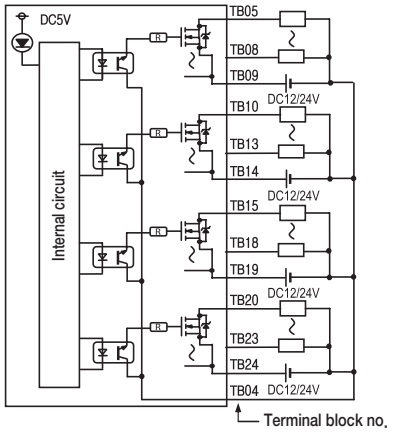

No.	Contact	No.	Contact
TB2	PE	TB1	Power
TB4	DC12/24V	TB3	
TB6	21	TB5	20
TB8	23	TB7	22
TB10	24	TB9	C0M0
TB12	26	TB11	25
TB14	C0M1	TB13	27
TB16	29	TB15	28
TB18	28	TB17	2A
TB20	2C	TB19	C0M2
TB22	2E	TB21	2D
TB24	C0M3	TB23	2F

Type

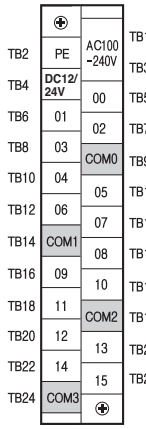

XBC-DN(R)64H
XEC-DN/DR/DP64H
Input wiring
(sink/source type)

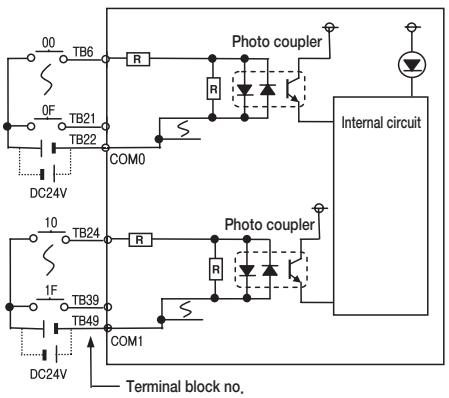

No.	Contact	No.	Contact
TB2	485+	TB1	RX
TB4	485-	TB3	TX
TB6	00	TB5	SG
TB8	02	TB7	01
TB10	04	TB9	03
TB12	06	TB11	05
TB14	08	TB13	07
TB16	0A	TB15	09
TB18	0O	TB17	0B
TB20	0E	TB19	0D
TB22	C0M0	TB21	0F
TB24	10	TB23	MC
TB26	12	TB25	11
TB28	14	TB27	13
TB30	16	TB29	15
TB32	18	TB31	17
TB34	1A	TB33	19
TB36	1C	TB35	1B
TB38	1E	TB37	1D
TB40	C0M1	TB39	1F
TB42	24V	TB41	24G

Type

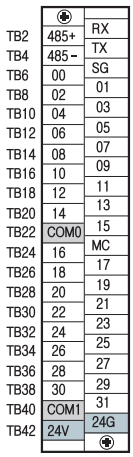

XBC-DR60H
XEC-DR64H
Relay output wiring

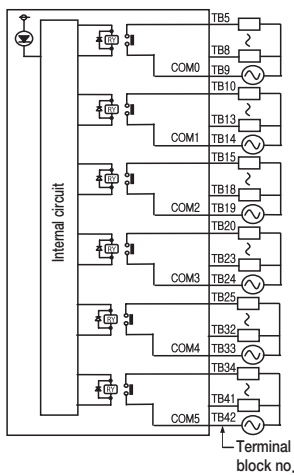

No.	Contact	No.	Contact
TB2	PE	TB1	Power
TB4	NC	TB3	
TB6	21	TB5	20
TB8	23	TB7	22
TB10	24	TB9	COM0
TB12	26	TB11	25
TB14	COM1	TB13	27
TB16	29	TB15	28
TB18	2B	TB17	2A
TB20	2C	TB19	COM2
TB22	2E	TB21	2D
TB24	COM2	TB23	2F
TB26	31	TB25	30
TB28	33	TB27	32
TB30	35	TB29	34
TB32	37	TB31	36
TB34	38	TB33	COM4
TB36	3A	TB35	39
TB38	3C	TB37	38
TB40	3E	TB39	3D
TB42	COM5	TB41	3F

Type

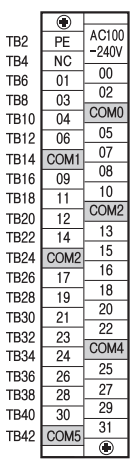

* XBC input : P00~P1F, XEC input : I00~I31 * XBC output : P21~P3F, XEC output : Q00~Q31

XBC-DP64H
Transistor output wiring
(sink type)

Circuit configuration

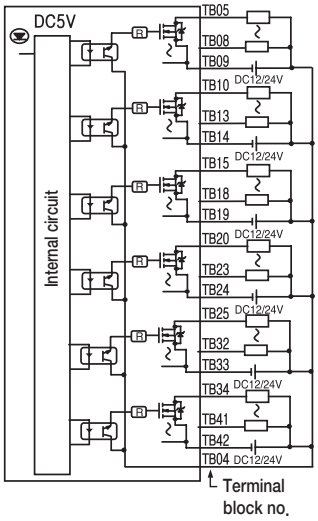

No.	Contact	No.	Contact
TB2	PE	TB1	Power
TB4	DC12/24V	TB3	
TB6	21	TB5	20
TB8	23	TB7	22
TB10	24	TB9	COM0
TB12	26	TB11	25
TB14	COM1	TB13	27
TB16	29	TB15	28
TB18	2B	TB17	2A
TB20	2C	TB19	COM2
TB22	2E	TB21	2D
TB24	COM2	TB23	2F
TB26	31	TB25	30
TB28	33	TB27	32
TB30	35	TB29	34
TB32	37	TB31	36
TB34	38	TB33	COM4
TB36	3A	TB35	39
TB38	3C	TB37	38
TB40	3E	TB39	3D
TB42	COM5	TB41	3F

Type

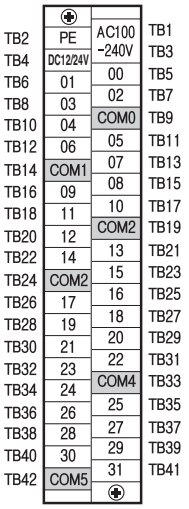

XBC-DP64H
Transistor output wiring
(source type)

Circuit configuration

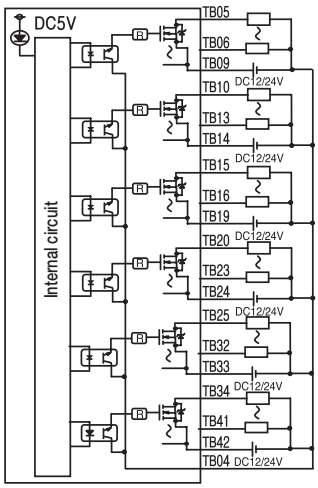

No.	Contact	No.	Contact
TB2	PE	TB1	Power
TB4	DC12/24V	TB3	
TB6	21	TB5	20
TB8	23	TB7	22
TB10	24	TB9	COM0
TB12	26	TB11	25
TB14	COM1	TB13	27
TB16	29	TB15	28
TB18	2B	TB17	2A
TB20	2C	TB19	COM2
TB22	2E	TB21	2D
TB24	COM2	TB23	2F
TB26	31	TB25	30
TB28	33	TB27	32
TB30	35	TB29	34
TB32	37	TB31	36
TB34	38	TB33	COM4
TB36	3A	TB35	39
TB38	3C	TB37	38
TB40	3E	TB39	3D
TB42	COM5	TB41	3F

Type

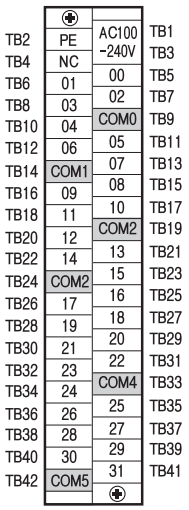

* XBC input : P00~P1F, XEC input : I00~I31 * XBC output : P21~P3F, XEC output : Q00~Q31

XBC/XEC SU

Standard

Contents

Performance specifications ····· 32
Wiring ····· 33

00 01 02 03 04 05 06 07 08 09 10 11 12 13 14 15 16 17
18 19 20 21 22 23 24 25 26 27 28 29 30 31 32 33 34 35
IN
OUT
00 01 02 03 04 05 06 07 08 09 10 11
12 13 14 15 16 17 18 19 20 21 22 23
XBO-TN04A
BATTERY
XBO-RTCA

Standard type

Performance specifications

Item	XBC/XEC-DN20SU XBC/XEC-DR20SU XBC/XEC-DP20SU	XBC/XEC-DN30SU XBC/XEC-DR30SU XBC/XEC-DP30SU	XBC/XEC-DN40SU XBC/XEC-DR40SU XBC/XEC-DP40SU	XBC/XEC-DN60SU XBC/XEC-DR60SU XBC/XEC-DP60SU
Control method	Repetitive, cyclic, interrupt, constant scan			
I/O control method	Refresh mode (Batch processing by scan synchronization), Direct mode by instruction			
Programming language	Ladder diagram, Instruction List			
Processing speed	94 ns / Step			
Program capacity	15Kstep / 200KB			
Main unit I/O points	20 (Input:12, Output:8)	30 (Input:18, Output:12)	40 (Input:24, Output:16)	60 (Input:36, Output:24)
Max. I/O points (Main + Expansion 7 stages)	244 points	254 points	264 points	284 points
Total program	128			
Operation mode	RUN, STOP, DEBUG			
Self diagnosis	Detects errors of scan time, memory error, I/O error, battery error, power error, etc.			
Program port	RS-232C 1 channel (Loader), USB 1 channel (U-type model)			
Retain data at power failure	Latch area setting at basic parameter			
Built-in functions	RS-232C / RS-485(2 ch), Pulse catch, Input filter, External interrupt, PID control, High-speed counter, Positioning			

Data memory

XBC			XEC		
Data area	P	P0000 ~ P1023F (16,384 points)	Symbolic variable	A	16KB (Max. 16KB retain setting abailable)
	M	M0000 ~ M1023F (16,384 points)			
	K	K0000 ~ K4095F (65,536 points)	Input variable	I	2KB (%IX 15.15.63)
	L	L0000 ~ L2047F (32,768 points)	Output variable	Q	2KB (%QX 15.15.63)
	F	F0000 ~ F1023F (16,384 points)	Direct variable	M	8KB (Max. retain setting available)
	T	100ms, 10ms, 1ms: T0000 ~ T1023 (1,024) (Adjustable by parameter setting)		R	20KB (1 block)
	C	C0000 ~ C1023 (1,024)		W	20KB
	S	S00.00 ~ S127.99	Flag variable	F	2KB
	D	D0000 ~ D10239 (10,240 word)		K	8KB
	U	U00.00 ~ U0A.31 (Analog data refresh area: 352 word)		L	4KB
				U	1KB
	Z	Z000 ~ Z127 (128 word)	Flash area		20KB (2 block)
	R	N0000 ~ N10236 (10,240 word)			

*Some products are due in market soon.

XBC/XEC-DR20SU
XBC/XEC-DN20SU
XBC/XEC-DP20SU

Input wiring
(sink/source type)

Circuit configuration

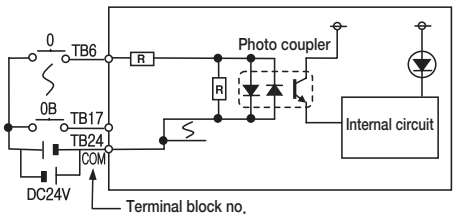

No.	Contact	No.	Contact
TB2	485+	TB1	RX
TB4	485-	TB3	TX
TB6	00	TB5	SG
TB8	02	TB7	01
TB10	04	TB9	03
TB12	06	TB11	05
TB14	08	TB13	07
TB16	0A	TB15	09
TB18	NC	TB17	0B
TB20	NC	TB19	NC
TB22	NC	TB21	NC
TB24	COM	TB23	NC

Type

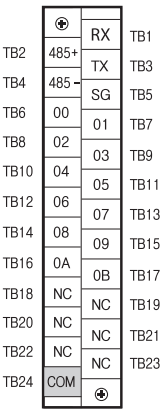

XBC/XEC-DR20SU

Relay output wiring

Circuit configuration

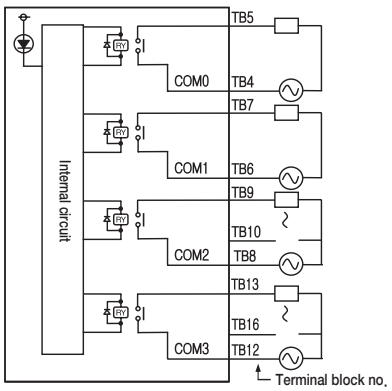

No.	Contact	No.	Contact
TB2	PE	TB1	AC100
TB4	C0M0	TB3	-240V
TB6	C0M1	TB5	40
TB8	C0M2	TB7	41
TB10	43	TB9	42
TB12	COM3	TB11	NC
TB14	45	TB13	44
TB16	47	TB15	46
TB18	NC	TB17	NC
TB20	NC	TB19	NC
TB22	NC	TB21	NC
TB24	24G	TB23	24V

Type

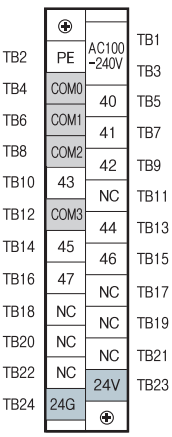

XBC/XEC-DN20SU

Transistor output wiring
(sink type)

Circuit configuration

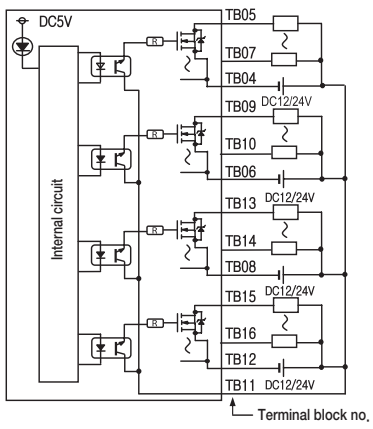

No.	Contact	No.	Contact
TB2	PE	TB1	AC100
TB4	COM0	TB3	-240V
TB6	COM1	TB5	40
TB8	COM2	TB7	41
TB10	43	TB9	42
TB12	COM3	TB11	P
TB14	45	TB13	44
TB16	47	TB15	46
TB18	NC	TB17	NC
TB20	NC	TB19	NC
TB22	NC	TB21	NC
TB24	24G	TB23	24V

Type

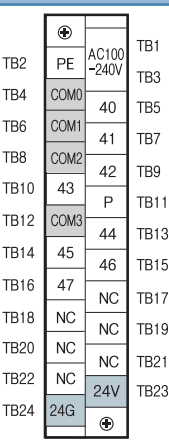

* XBC input : P00~P23, XEC input : I00~I35 * XBC output : P40~P57, XEC output : Q00~Q23

XBC/XEC-DP32H

Transistor output wiring
(source type)

Circuit configuration

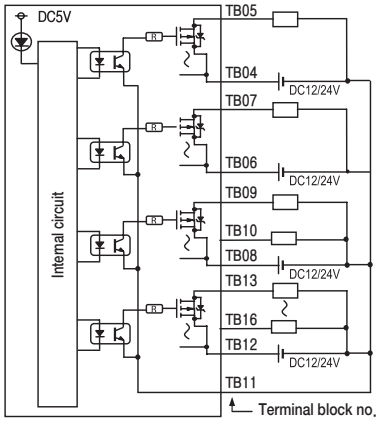

No.	Contact	No.	Contact
TB2	PE	TB1	AC100
TB4	C0M0	TB3	-240V
TB6	C0M1	TB5	Q00
TB8	C0M2	TB7	Q01
TB10	Q03	TB9	Q02
TB12	COM3	TB11	N
TB14	Q05	TB13	Q04
TB16	Q07	TB15	Q06
TB18	NC	TB17	NC
TB20	NC	TB19	NC
TB22	NC	TB21	NC
TB24	24G	TB23	24V

Type

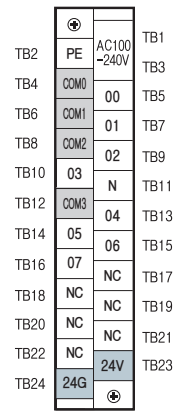

XBC/XEC-DR30SU
XBC/XEC-DN30SU
XBC/XEC-DP30SU

Input wiring
(sink/source type)

Circuit configuration

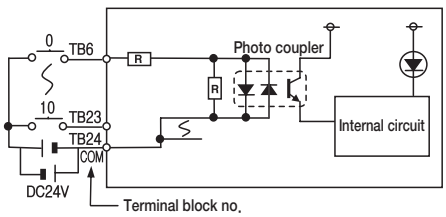

No.	Contact	No.	Contact
TB2	485+	TB1	RX
TB4	485-	TB3	TX
TB6	00	TB5	SG
TB8	02	TB7	01
TB10	04	TB9	03
TB12	06	TB11	05
TB14	08	TB13	07
TB16	0A	TB15	09
TB18	0C	TB17	0B
TB20	0E	TB19	0D
TB22	10	TB21	0F
TB24	COM	TB23	11

Type

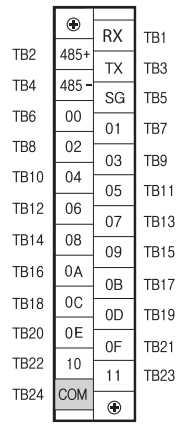

XBC/XEC-DR30SU

Relay output wiring

Circuit configuration

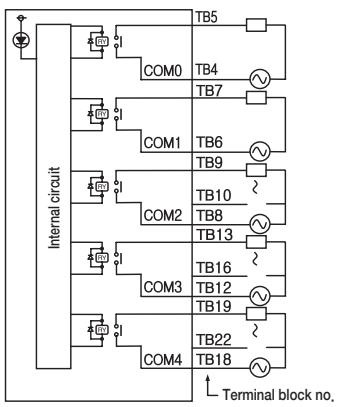

No.	Contact	No.	Contact
TB2	PE	TB1	AC100
TB4	COM0	TB3	-240V
TB6	COM1	TB5	40
TB8	COM2	TB7	41
TB10	43	TB9	42
TB12	COM3	TB11	NC
TB14	45	TB13	44
TB16	47	TB15	46
TB18	COM4	TB17	NC
TB20	49	TB19	48
TB22	4B	TB21	4A
TB24	24G	TB23	24V

Type

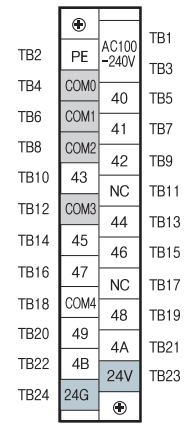

* XBC input : P00~P23, XEC input : I00~I35 * XBC output : P40~P57, XEC output : Q00~Q23

XBC/XEC-DN30SU

Transistor output wiring
(sink type)

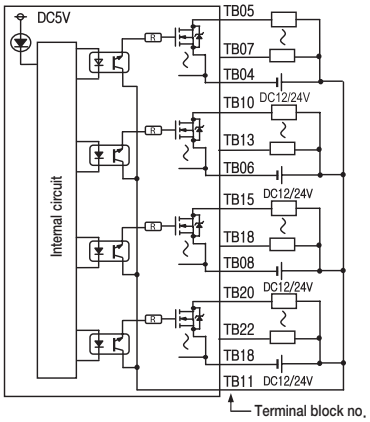

No.	Contact	No.	Contact
TB2	PE	TB1	AC100
TB4	COM0	TB3	-240V
TB6	COM1	TB5	40
TB8	COM2	TB7	41
TB10	43	TB9	42
TB12	COM3	TB11	P
TB14	45	TB13	44
TB16	47	TB15	46
TB18	COM4	TB17	NC
TB20	49	TB19	48
TB22	4B	TB21	4A
TB24	24G	TB23	24V

Type

TB2	PE	AC100 -240V	TB1
TB4	COM0	40	TB3
TB6	COM1	41	TB5
TB8	COM2	42	TB7
TB10	43	P	TB9
TB12	COM3	44	TB11
TB14	45	46	TB13
TB16	47	NC	TB15
TB18	COM4	48	TB17
TB20	49	4A	TB19
TB22	4B	24V	TB21
TB24	24G		TB23

XBC/XEC-DP30SU

Transistor output wiring
(source type)

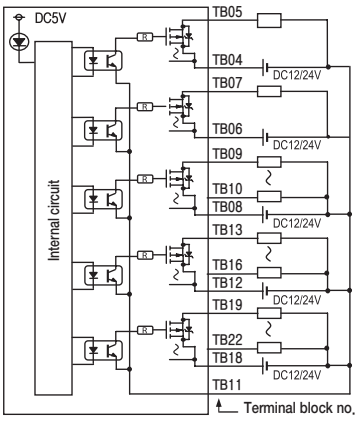

No.	Contact	No.	Contact
TB2	PE	TB1	AC100
TB4	COM0	TB3	-240V
TB6	COM1	TB5	Q00
TB8	COM2	TB7	Q01
TB10	Q03	TB9	Q02
TB12	COM3	TB11	N
TB14	Q05	TB13	Q04
TB16	Q07	TB15	Q06
TB18	COM4	TB17	NC
TB20	Q09	TB19	Q08
TB22	Q11	TB21	Q10
TB24	24G	TB23	24V

Type

TB2	PE	AC100 -240V	TB1
TB4	COM0	00	TB3
TB6	COM1	01	TB5
TB8	COM2	02	TB7
TB10	03	N	TB9
TB12	COM3	04	TB11
TB14	05	06	TB13
TB16	07	NC	TB15
TB18	COM4	08	TB17
TB20	09	10	TB19
TB22	11	24V	TB21
TB24	24G		TB23

XBC/XEC-DR40SU
XBC/XEC-DN40SU
XBC/XEC-DP40SU

DC24 Input wiring
(sink/source type)

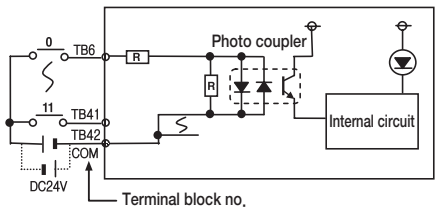

No.	Contact	No.	Contact
TB2	485+	TB1	RX
TB4	485-	TB3	TX
TB6	00	TB5	SG
TB8	02	TB7	01
TB10	04	TB9	03
TB12	06	TB11	05
TB14	08	TB13	07
TB16	0A	TB15	09
TB18	0C	TB17	0B
TB20	0E	TB19	0D
TB22	10	TB21	0F
TB24	12	TB23	11
TB26	14	TB25	13
TB28	16	TB27	15
TB30	COM	TB29	17

Type

TB2	485+	RX	TB1
TB4	485-	TX	TB3
TB6	00	SG	TB5
TB8	02	01	TB7
TB10	04	03	TB9
TB12	06	05	TB11
TB14	08	07	TB13
TB16	0A	09	TB15
TB18	0C	0B	TB17
TB20	0E	0D	TB19
TB22	10	0F	TB21
TB24	12	11	TB23
TB26	14	13	TB25
TB28	16	15	TB27
TB30	COM	17	TB29

* XBC input : P00~P23, XEC input : I00~I35 * XBC output : P40~P57, XEC output : Q00~Q23

XBC/XEC-DR40SU
Relay output wiring

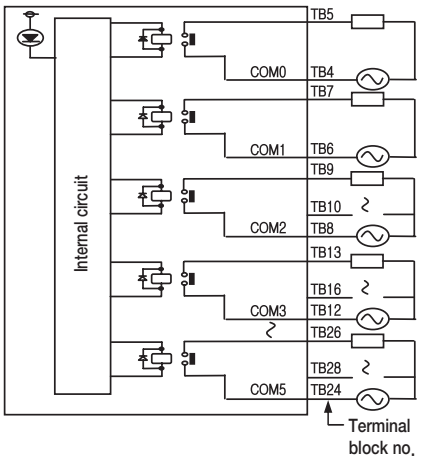

No.	Contact	No.	Contact
		TB1	AC100
TB2	PE	TB3	-240V
TB4	COM0	TB5	40
TB6	COM1	TB7	41
TB8	COM2	TB9	42
TB10	43	TB11	NC
TB12	COM3	TB13	44
TB14	45	TB15	46
TB16	47	TB17	NC
TB18	COM4	TB19	48
TB20	49	TB21	4A
TB22	4B	TB23	NC
TB24	COM5	TB25	4C
TB26	4D	TB27	4E
TB28	4F	TB29	24V
TB30	24G		

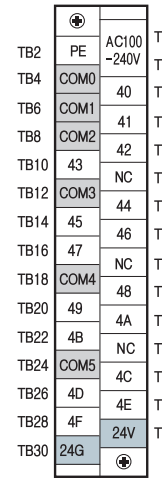

XBC/XEC-DN40SU
Transistor output wiring (sink type)

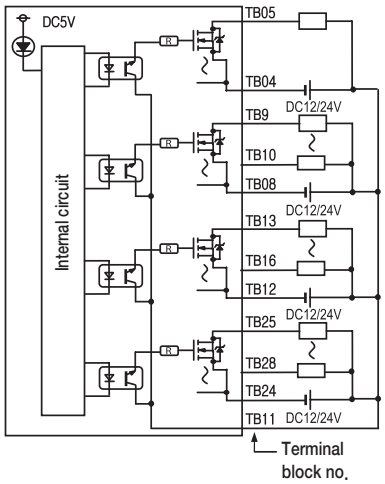

No.	Contact	No.	Contact
		TB1	AC100
TB2	PE	TB3	-240V
TB4	COM0	TB5	40
TB6	COM1	TB7	41
TB8	COM2	TB9	42
TB10	43	TB11	P
TB12	COM3	TB13	44
TB14	45	TB15	46
TB16	47	TB17	NC
TB18	COM4	TB19	48
TB20	49	TB21	4A
TB22	4B	TB23	NC
TB24	COM5	TB25	4C
TB26	4D	TB27	4E
TB28	4F	TB29	24V
TB30	24G		

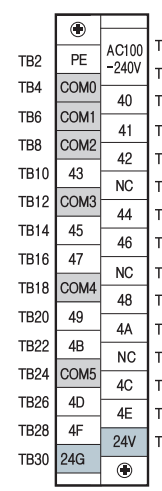

XBC/XEC-DP40SU
Transistor output wiring (source type)

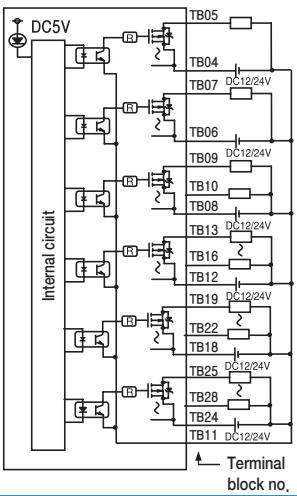

No.	Contact	No.	Contact
		TB1	AC100
TB2	PE	TB3	-240V
TB4	COM0	TB5	00
TB6	COM1	TB7	01
TB8	COM2	TB9	02
TB10	03	TB11	N
TB12	COM3	TB13	04
TB14	05	TB15	06
TB16	07	TB17	NC
TB18	COM4	TB19	08
TB20	09	TB21	10
TB22	11	TB23	NC
TB24	COM5	TB25	12
TB26	13	TB27	14
TB28	15	TB29	24V
TB30	24G		

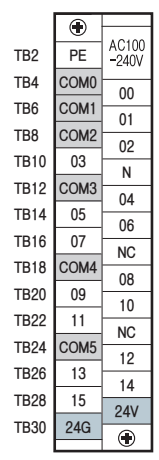

* XBC input : P00~P23, XEC input : I00~I35 * XBC output : P40~P57, XEC output : Q00~Q23

XBC/XEC-DR60SU
XBC/XEC-DN60SU
XBC/XEC-DP60SU
Input wiring
(sink/source type)

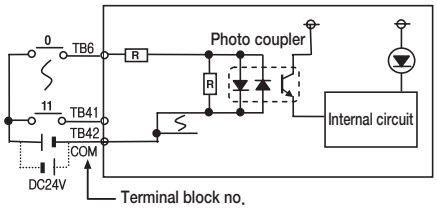

No.	Contact	No.	Contact
TB2	485+	TB1	RX
TB4	485-	TB3	TX
TB6	00	TB5	SG
TB8	02	TB7	01
TB10	04	TB9	03
TB12	06	TB11	05
TB14	08	TB13	07
TB16	0A	TB15	09
TB18	0C	TB17	0B
TB20	0E	TB19	0D
TB22	10	TB21	0F
TB24	12	TB23	11
TB26	14	TB25	13
TB28	16	TB27	15
TB30	18	TB29	17
TB32	1A	TB31	19
TB34	1C	TB33	1B
TB36	1E	TB35	1D
TB38	20	TB37	1F
TB40	22	TB39	21
TB42	COM	TB41	23

Type

TB2	485+	RX	TB1
TB4	485-	TX	TB3
TB6	00	SG	TB5
TB8	02	01	TB7
TB10	04	03	TB9
TB12	06	05	TB11
TB14	08	07	TB13
TB16	0A	09	TB15
TB18	00	0B	TB17
TB20	0E	0D	TB19
TB22	10	0F	TB21
TB24	12	11	TB23
TB26	14	13	TB25
TB28	16	15	TB27
TB30	18	17	TB29
TB32	1A	19	TB31
TB34	1C	1B	TB33
TB36	1E	1D	TB35
TB38	20	1F	TB37
TB40	22	21	TB39
TB42	COM	23	TB41

XBC/XEC-DR60SU
Relay output wiring

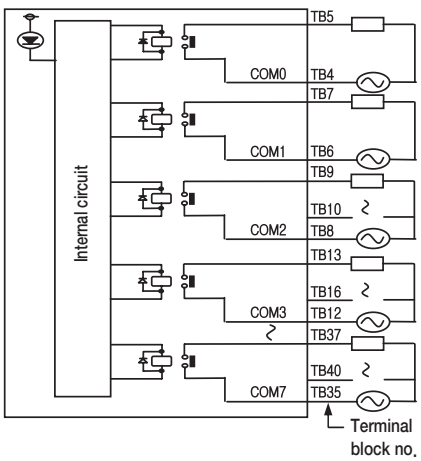

No.	Contact	No.	Contact
TB2	PE	TB1	AC100
TB4	C0M0	TB3	-240V
TB6	C0M1	TB5	40
TB8	C0M2	TB7	41
TB10	43	TB9	42
TB12	COM3	TB11	NC
TB14	45	TB13	44
TB16	47	TB15	46
TB18	COM4	TB17	NC
TB20	49	TB19	48
TB22	4B	TB21	4A
TB24	COM5	TB23	NC
TB26	4D	TB25	4C
TB28	4F	TB27	4E
TB30	COM6	TB29	NC
TB32	51	TB31	50
TB34	53	TB33	52
TB36	COM7	TB35	NC
TB38	55	TB37	54
TB40	57	TB39	56
TB42	24G	TB41	24V

Type

TB2	485+	AC100	TB1
TB4	485-	-240V	TB3
TB6	00	40	TB5
TB8	02	41	TB7
TB10	04	42	TB9
TB12	06	NC	TB11
TB14	08	44	TB13
TB16	0A	46	TB15
TB18	00	NC	TB17
TB20	0E	48	TB19
TB22	10	4A	TB21
TB24	12	NC	TB23
TB26	14	4C	TB25
TB28	16	4E	TB27
TB30	18	NC	TB29
TB32	1A	50	TB31
TB34	1C	52	TB33
TB36	1E	NC	TB35
TB38	20	54	TB37
TB40	22	56	TB39
TB42	COM	24V	TB41

* XBC input : P00~P23, XEC input : I00~I35 * XBC output : P40~P57, XEC output : Q00~Q23

XBC/XEC-DN60SU

Transistor output wiring (sink type)

Circuit configuration

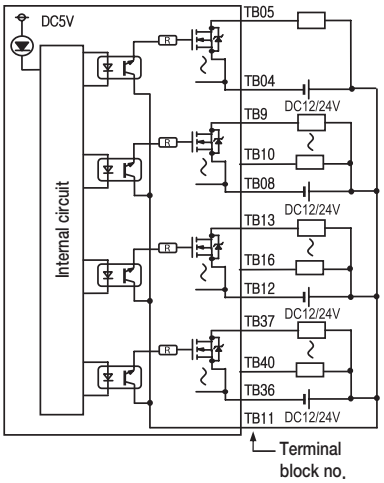

No.	Contact	No.	Contact
TB2	PE	TB1	AC100
TB4	C0M0	TB3	-240V
TB6	C0M1	TB5	40
TB8	C0M2	TB7	41
TB10	43	TB9	42
TB12	COM3	TB11	P
TB14	45	TB13	44
TB16	47	TB15	46
TB18	COM4	TB17	NC
TB20	49	TB19	48
TB22	4B	TB21	4A
TB24	COM5	TB23	NC
TB26	4D	TB25	4C
TB28	4F	TB27	4E
TB30	COM6	TB29	NC
TB32	51	TB31	50
TB34	53	TB33	52
TB36	COM7	TB35	NC
TB38	55	TB37	54
TB40	57	TB39	56
TB42	24G	TB41	24V

Type

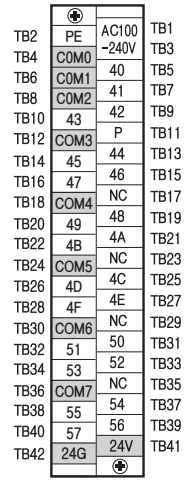

XBC/XEC-DP60SU

Transistor output wiring (source type)

Circuit configuration

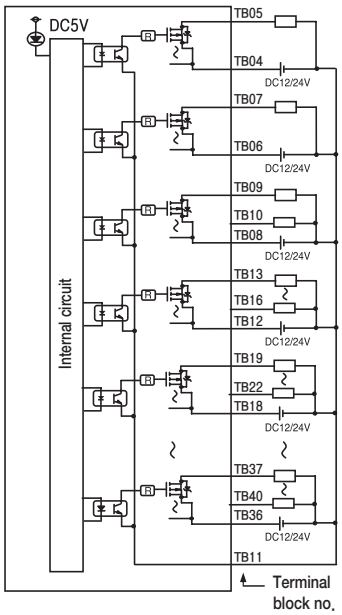

No.	Contact	No.	Contact
TB2	PE	TB1	AC100
TB4	C0M0	TB3	-240V
TB6	C0M1	TB5	00
TB8	C0M2	TB7	01
TB10	03	TB9	02
TB12	COM3	TB11	N
TB14	05	TB13	04
TB16	07	TB15	06
TB18	COM4	TB17	NC
TB20	09	TB19	08
TB22	11	TB21	10
TB24	COM5	TB23	NC
TB26	13	TB25	12
TB28	15	TB27	14
TB30	COM6	TB29	NC
TB32	17	TB31	16
TB34	19	TB33	18
TB36	COM7	TB35	NC
TB38	21	TB37	20
TB40	23	TB39	22
TB42	24G	TB41	24V

Type

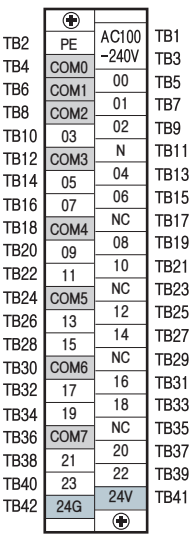

* XBC input : P00~P23, XEC input : I00~I35 * XBC output : P40~P57, XEC output : Q00~Q23

XGB
XEC-DR20E
PWR
RUN
ERR
00 01 02 03 04 05
06 07 08 09 10 11
IN
OUT
00 01 02 03
04 05 06 07
XBO-TC02A
XGB
XEC-DR20E
PWR
RUN
ERR
00 01 02 03 04 05
06 07 08 09 10 11
IN
OUT
00 01 02 03
04 05 06 07
XBO-TC02A

XBC/XEC E

Economic

Contents

Performance specifications ····· 42
Wiring ····· 43

Economic

Performance specifications

Item		Specifications ('E' type)			
		XBC/XEC-DR10E XBC/XEC-DN10E XBC/XEC-DP10E	XBC/XEC-DR14E XBC/XEC-DN14E XBC/XEC-DP14E	XBC/XEC-DR20E XBC/XEC-DN20E XBC/XEC-DP20E	XBC/XEC-DR30E XBC/XEC-DN30E XBC/XEC-DP30E
Program control method		Reiterative operation, Fixed cycle operation			
I/O control method		Scan synchronized batch processing method (Refresh method) Direct method by instruction			
Program language		Ladder Diagram (LD), Sequential Function Chart (SFC) Structured Text (ST), Instruction List (IL)			
Processing speed (Basic instruction)		240 ns/step			
Program capacity		4 Kstep (XBC-D×××E), 50 KB (XEC-D×××E)			
Max. I/O points (Main+Option X)		14 point (1 option)	18 point (1 option)	28 point (2 option)	38 point (2 option)
Operation Mode		RUN, STOP, DEBUG			
Total number of program block		128			
Task	Initialization	1			
	Fixed period	8			
	External input	4 (%I×0.0.0~%I×0.0.3)			
	Internal device	8			
Program port		RS-232C 1 channel (Loader)			
Self-diagnostic functions		Watchdog Timer, Memory error detection I/O error detection, etc.			
Built-in functions		RS-232C or RS-485(1 ch), Pulse catch, Input filter, External interrupt, High-speed counter			
Retain data at power failure		Latch area setting at basic parameter			

XBC/XEC-DR10E
XBC/XEC-DN10E
XBC/XEC-DP10E
Input iring
(sink/source type)

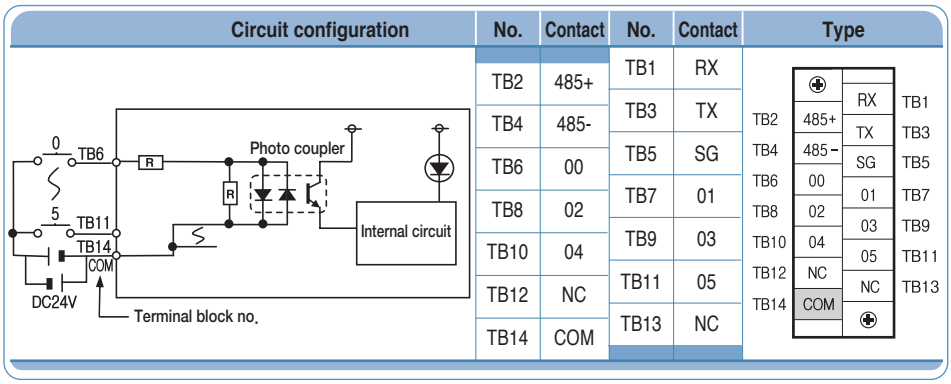

XBC/XEC-DR10E
Relay output wiring

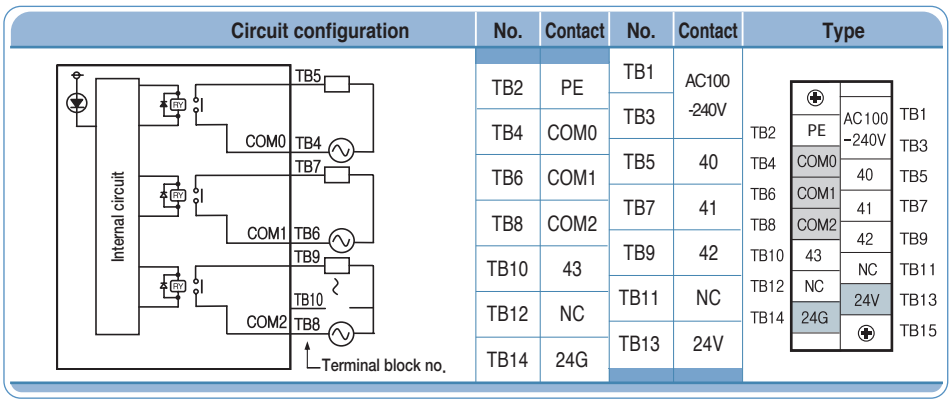

XBC/XEC-DN10E
Transistor output wiring
(sink type)

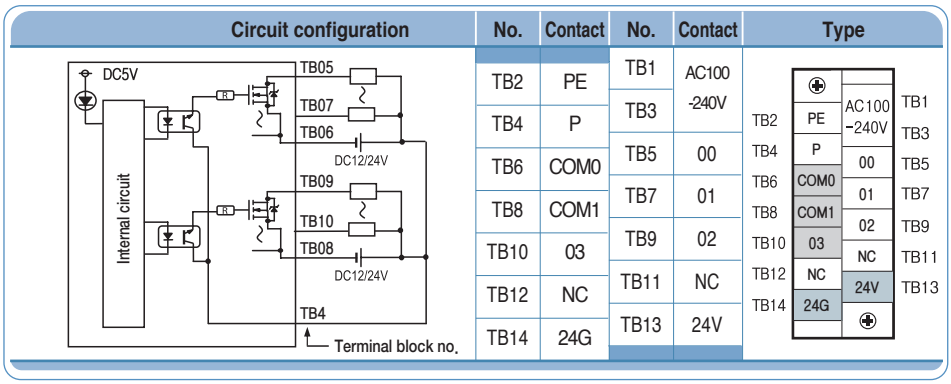

XBC/XEC-DP10E
Transistor output wiring
(source type)

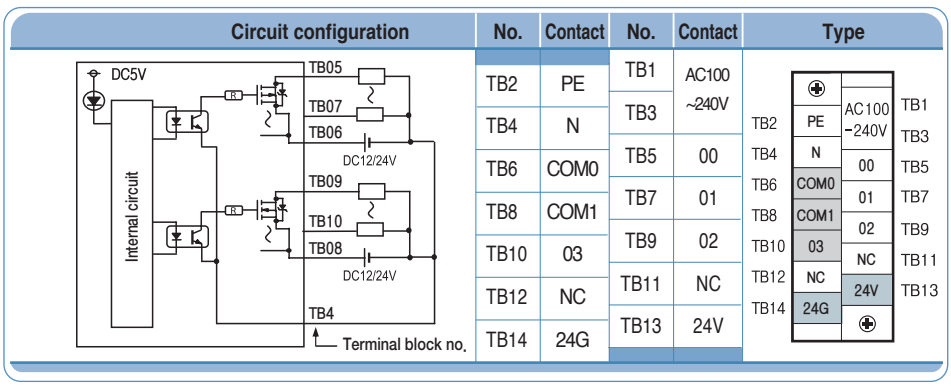

* XBC input : P00~P11, XEC input : I00~I17 * XBC output : P40~P4B, XEC output : Q00~Q11

XBC/XEC-DR14E
XBC/XEC-DN14E
XBC/XEC-DP14E
Input iring
(sink/source type)

Circuit configuration

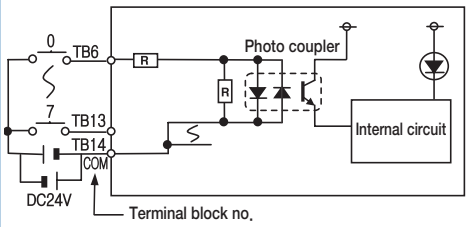

No.	Contact	No.	Contact
TB2	485+	TB1	RX
TB4	485-	TB3	TX
TB6	00	TB5	SG
TB8	02	TB7	01
TB10	04	TB9	03
TB12	06	TB11	05
TB14	COM	TB13	07

Type

TB2	485+	RX TB1
TB4	485-	TX TB3
TB6	00	SG TB5
TB8	02	01 TB7
TB10	04	03 TB9
TB12	06	05 TB11
TB14	COM	07 TB13

XBC-DR14E
Relay output wiring

Circuit configuration

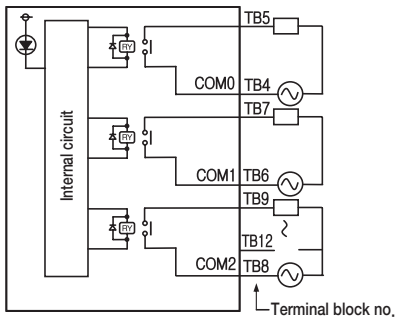

No.	Contact	No.	Contact
TB2	PE	TB1	AC100 -240V
TB4	COM0	TB3	
TB6	COM1	TB5	40
TB8	COM2	TB7	41
TB10	43	TB9	42
TB12	NC	TB11	NC
TB14	24G	TB13	24V

Type

TB2	PE	AC100 -240V TB1
TB4	COM0	40 TB3
TB6	COM1	41 TB5
TB8	COM2	42 TB7
TB10	43	44 TB9
TB12	45	24V TB11
TB14	24G	TB13

XBC/XEC-DN14E
Transistor output wiring
(sink type)

Circuit configuration

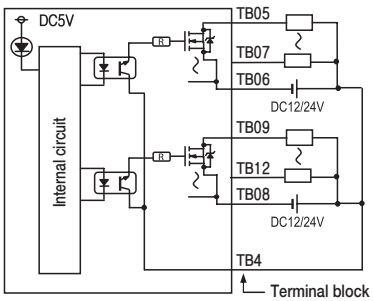

No.	Contact	No.	Contact
TB2	PE	TB1	AC100 -240V
TB4	P	TB3	
TB6	COM0	TB5	00
TB8	COM1	TB7	01
TB10	03	TB9	02
TB12	05	TB11	04
TB14	24G	TB13	24V

Type

TB2	PE	AC100 -240V TB1
TB4	P	00 TB3
TB6	COM0	01 TB5
TB8	COM1	02 TB7
TB10	03	04 TB9
TB12	05	24V TB11
TB14	24G	TB13

XBC/XEC-DP14E
Transistor output wiring
(source type)

Circuit configuration

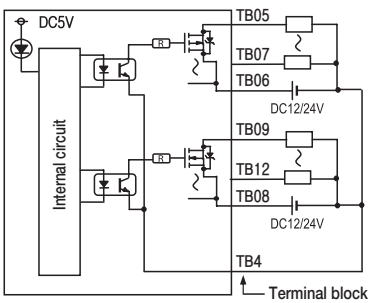

No.	Contact	No.	Contact
TB2	PE	TB1	AC100 -240V
TB4	N	TB3	
TB6	COM0	TB5	00
TB8	COM1	TB7	01
TB10	03	TB9	02
TB12	05	TB11	04
TB14	24G	TB13	24V

Type

TB2	PE	AC100 -240V TB1
TB4	N	00 TB3
TB6	COM0	01 TB5
TB8	COM1	02 TB7
TB10	03	04 TB9
TB12	05	24V TB11
TB14	24G	TB13

* XBC input : P00~P11, XEC input : I00~I17 * XBC output : P40~P4B, XEC output : Q00~Q11

XBC/XEC-DR20E
XBC/XEC-DN20E
XBC/XEC-DP20E
Input iring
(sink/source type)

Circuit configuration

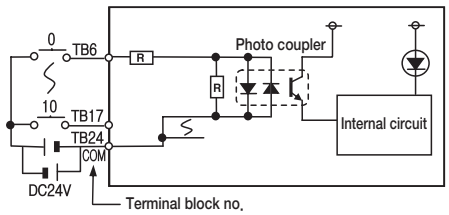

No.	Contact	No.	Contact
TB2	485+	TB1	RX
TB4	485-	TB3	TX
TB6	00	TB5	SG
TB8	02	TB7	01
TB10	04	TB9	03
TB12	06	TB11	05
TB14	08	TB13	07
TB16	0A	TB15	09
TB18	NC	TB17	0B
TB20	NC	TB19	NC
TB22	NC	TB21	NC
TB24	COM	TB23	NC

Type

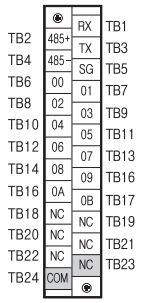

XBC-DR20E
Relay output wiring

Circuit configuration

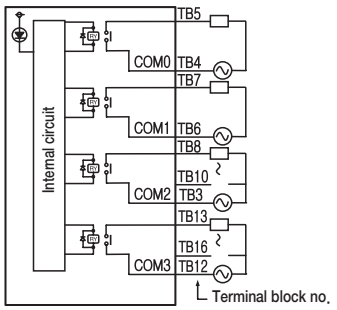

No.	Contact	No.	Contact
TB2	PE	TB1	AC100
TB4	COM0	TB3	–240V
TB6	COM1	TB5	40
TB8	COM2	TB7	41
TB10	43	TB9	42
TB12	45	TB11	NC
TB14	47	TB13	44
TB16	NC	TB15	46
TB18	NC	TB17	NC
TB20	NC	TB19	NC
TB22	NC	TB21	NC
TB24	24G	TB23	24V

Type

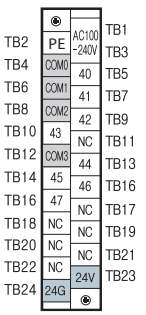

XBC/XEC-DN20E
Transistor output wiring
(sink type)

Circuit configuration

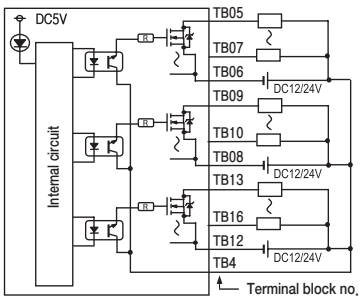

No.	Contact	No.	Contact
TB2	PE	TB1	AC100
TB4	P	TB3	-240V
TB6	COM0	TB5	00
TB8	COM1	TB7	01
TB10	03	TB9	02
TB12	COM2	TB11	NC
TB14	05	TB13	04
TB16	07	TB15	06
TB18	NC	TB17	NC
TB20	NC	TB19	NC
TB22	NC	TB21	NC
TB24	24G	TB23	24V

Type

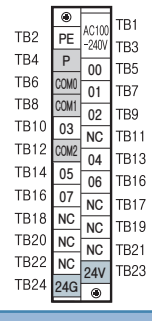

XBC/XEC-DP20E
Transistor output wiring
(source type)

Circuit configuration

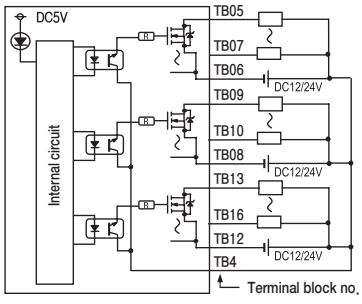

No.	Contact	No.	Contact
TB2	PE	TB1	AC100
TB4	N	TB3	-240V
TB6	COM0	TB5	00
TB8	COM1	TB7	01
TB10	03	TB9	02
TB12	COM2	TB11	NC
TB14	05	TB13	04
TB16	07	TB15	06
TB18	NC	TB17	NC
TB20	NC	TB19	NC
TB22	NC	TB21	NC
TB24	24G	TB23	24V

Type

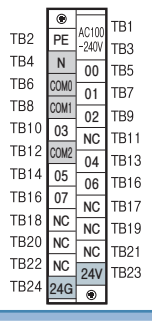

* XBC input : P00~P11, XEC input : I00~I17 * XBC output : P40~P4B, XEC output : Q00~Q11

XBC/XEC-DR30E
XBC/XEC-DN30E
XBC/XEC-DP30E

Input iring
(sink/source type)

Circuit configuration

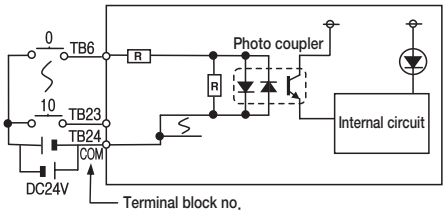

No.	Contact	No.	Contact
TB2	485+	TB1	RX
TB4	485-	TB3	TX
TB6	00	TB5	SG
TB8	02	TB7	01
TB10	04	TB9	03
TB12	06	TB11	05
TB14	08	TB13	07
TB16	0A	TB15	09
TB18	OC	TB17	0B
TB20	OE	TB19	OD
TB22	10	TB21	OF
TB24	COM	TB23	11

Type

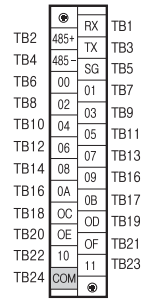

XBC-DR30E

Relay output wiring

Circuit configuration

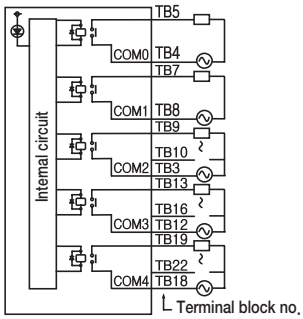

No.	Contact	No.	Contact
TB2	PE	TB1	AC100
TB4	COM0	TB3	–240V
TB6	COM1	TB5	40
TB8	COM2	TB7	41
TB10	43	TB9	42
TB12	COM3	TB11	NC
TB14	45	TB13	44
TB16	47	TB15	46
TB18	COM4	TB17	NC
TB20	49	TB19	48
TB22	4B	TB21	4A
TB24	24G	TB23	24V

Type

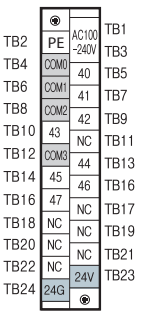

XBC/XEC-DN30E

Transistor output wiring
(sink type)

Circuit configuration

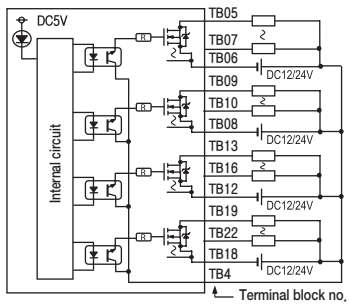

No.	Contact	No.	Contact
TB2	PE	TB1	AC100
TB4	P	TB3	-240V
TB6	COM0	TB5	00
TB8	COM1	TB7	01
TB10	03	TB9	02
TB12	COM2	TB11	NC
TB14	05	TB13	04
TB16	07	TB15	06
TB18	COM3	TB17	NC
TB20	09	TB19	08
TB22	11	TB21	10
TB24	24G	TB23	24V

Type

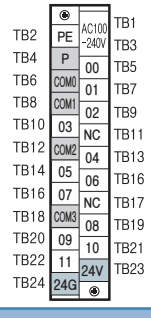

XBC/XEC-DP30E

Transistor output wiring
(source type)

Circuit configuration

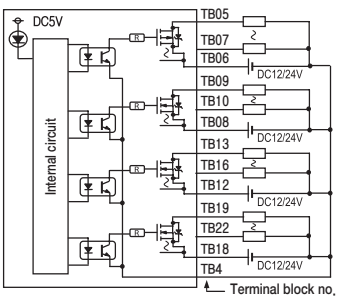

No.	Contact	No.	Contact
TB2	PE	TB1	AC100
TB4	N	TB3	-240V
TB6	COM0	TB5	00
TB8	COM1	TB7	01
TB10	03	TB9	02
TB12	COM2	TB11	NC
TB14	05	TB13	04
TB16	07	TB15	06
TB18	COM3	TB17	NC
TB20	09	TB19	08
TB22	11	TB21	10
TB24	24G	TB23	24V

Type

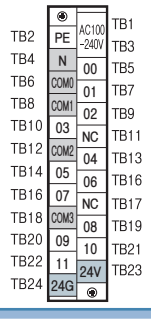

* XBC input : P00~P11, XEC input : I00~I17 * XBC output : P40~P4B, XEC output : Q00~Q11

XBM Slim

Slim

Contents

General specification 50
Performance specifications 51
Wiring 55

XBE-RY16A
XBE-RY16A
XBE-TN32A
XBE-DC32A
XBE-TN32A
XBF-DV04A
RUN
XBF-AD04A
RUN
XBM-DR16S
PWR
RUN
ERR
RS-232C
RUN
STOP
CH0
CH1
CH2
CH3
COM
XBE-RY16A
XBE-TN32A
XBE-DC32A
XBE-TN32A
RS-485
RS-232C

Slim

Modular type unit
(XBM-DN32H, DN32HP, DN32S, DR16S, DN16S)

Item	Descriptions				Standard
Ambient temperature	0 ~ 55 °C				
Storage temperature	-25 ~ +70 °C				
Ambient humidity	5 ~ 95%RH (Non-condensing)				
Storage humidity	5 ~ 95%RH (Non-condensing)				
Vibration resistance	Occasional vibration			10 times each direction (X, Y and Z)	IEC61131-2
	Frequency	Acceleration	Pulse width		
	10 ≤ f < 57Hz	–	0.075mm		
	57 ≤ f ≤ 150Hz	9.8m/s² (1G)	–		
	Continuous vibration				
	Frequency	Acceleration	Pulse width		
	10 ≤ f < 57Hz	–	0.035mm		
	57 ≤ f ≤ 150Hz	4.9m/s² (0.5G)	–		
Shock resistance	• Peak acceleration: 147m/s² (15g) • Duration: 11ms • Pulse waveform: Half-sine, 3times each direction per each axis				IEC61131-2
Noise resistance	Square wave impulse noise	±500 V			LSIS Standard
	Electrostatic discharge	4kV			IEC61131-2 IEC61000-4-2
	Radiated electromagnetic field noise	80 ~ 1000MHz, 10V/m			IEC61131-2 IEC61000-4-3
	Fast transient/ Burst noise	Main unit	Expansion module		IEC61131-2 IEC61000-4-4
		2kV	1kV		
Operating ambience	Free from corrosive gases and excessive dust				
Altitude	Up to 2,000m				
Pollution level *1)	Less than 2				
Cooling	Air-cooling				

*1) Pollution level indicates the degree to which conductive material is generated in the environment where the equipment is used. Pollution level 2 is the condition that only non-conductive pollution occurred but temporary conductivity may be produced due to condensing.

Performance specifications

Common performance specifications for CPU

Item		Specifications XBM-DN32H2/XBM-DN32HP, XBM-DP32H2/XBM-DP32HP	Remark
Program control metho		Cyclic execution of stored program, Time-driven interrupt, Process-driven interrupt	
I/O control method		Batch processing by simultaneous scan (Refresh method), Directed by program instruction	
Program language		LD(Ladder Diagram), Instruction List, SFC (Sequential Function Chart)ST (Structured Text)	
Number of instructions	Basic	28	
	Application	677	
Processing speed (Basic instruction)		40ns/step	
Program capacity		64kStep	
Max. I/O points		256 points (Main + Expansion 7 stages)	
Data area	P	P0000 ~ P2047F (32,768 points)	Input/Ouput
	M	M0000 ~ M2047F (32,768 points)	
	K	K0000 ~ K4095F (65,536 points)	
	L	L0000 ~ L4095F (65,536 points)	Link
	F	F0000 ~ F2047F (32,768 points)	
	T	100^{ms}, 10^{ms}, 1^{ms}: T0000 ~ T2047 (set by parameter)	Timer
	C	C0000 ~ C2047	Counter
	S	S00.00 ~ S127.99	Step
	D	D0000 ~ D32767	Data register
	U	U0.0 ~ U08.31	Analog Data
	Z	Z000 ~ Z127 (128word)	
	N	N0000 ~ N10239 (10,240 word)	
File resister	P	RAM area 8block (R00000 ~ R32,767)	
Total program		256	
Initial task	Initial task	1	
	Cyclic task	Max 16	
	I/O task	Max 8	
	Internal device task	Max 16	
	High Speed Counter task	Max 4	
	File resister	1	
Operation mode		RUN, STOP, DEBUG	
Self-diagnosis function		Detects errors of scan time, memory, I/O and power supply	
Program port		USB 1 channel	
Back-up method		Latch area setting in basic parameter	
Internal consumption current		540mA	
Weight		134g	

Common performance specifications for CPU

Item			Specifications	Remark
			XEM-DN32H2/XEM-DN32HP, XEM-DP32H2/XEM-DP32HP	
Program control metho			Cyclic execution of stored program, Time-driven interrupt, Process-driven interrupt	
I/O control method			Batch processing by simultaneous scan (Refresh method), Directed by program instruction	
Program language			LD (Ladder Diagram), Instruction List, SFC (Sequential Function Chart) ST(Structured Text)	
Number of instructions	Operator		18	
	Basic function		136+Real number operation function	
	Basic function block		43	
	Dedicated function block		Spectial function dedicated function	
Processing speed (Basic instruction)			40ns/step	
Program capacity			384KB	
Max. I/O points			256 points (Main + Expansion 7 stages)	
Data area	Automatic variable (A)		64KB (All area retain setting available)	
	Input variable (I)		2 KB (%IX15.15.63)	
	Output variable (Q)		2 KB (%QX15.15.63)	
	Direct variable	M	32KB (All area retain setting available)	
		R	32KB (2block)	
		W	64KB	
	Flag variable	F	4KB	
		K	8KB	
		L	8KB	
		U	576KB	
			N0000 ~ N10239 (10,240 word)	
Total program			256	
Initial task	Initial task		1	
	Cyclic task		Max 16	
	I/O task		Max 8	
	Internal device task		Max 16	
	High speed counter task		Max 4	
	Positioning task		1	
Operation mode			RUN, STOP, DEBUG	
Self-diagnosis function			Detects errors of scan time, memory, I/O and power supply	
Program port			USB 1 channel	
Back-up method			Latch area setting in basic parameter	
Internal consumption current			540mA	
Weight			134g	

Built in Function

Item		
PID control		Control by instruction, auto-tuning, PWM output, Forced output, Operation scan time setting,Antiwindup, Delta MV, SV lamp, Hybrid operation, Cascade operation
Cnet	PID control	Dedicated protocol(XGT) Modbus protocol User defined protocol , LS bus(inverter protocol)
	Channel	RS-232C 1 port and RS-485 1 port
Enet	Transfer spec	Cable: 100Base-TX, Speed: 100Mbps, Auto-MDIX*1, IEEE 802.3
	Topology	Star
	Diagnosis	Module information, Service condition
	Protocol	XGT dedicated, Modbus TCP/IP, user define frame
	Service	P2P, High Speed link, Remote connection,SMTP,SNTP, Auto scan
High speed counter	Performance	1 phase: 200ß'(2 phase: 100ß')
	channels	1phase 4 channels, 2 phase 2 channels
	Counter mode	4 counter modes are supported based on input pulse and INC/DEC method • 1 pulse operation Mode : INC/DEC count by program • 1 pulse operation Mode : INC/DEC count by phase B pulse input • 2 pulse operation Mode : INC/DEC count by input pulse • 2 pulse operation Mode : INC/DEC count by difference of phase
	Function	• Internal/external preset • Latch counter • Compare output • No. of rotation per unit time
Position	Basic function	No. of control axis: 6axis(XBM / XEM-DN32H2: 2 axis) Control method : Position control, Speed control, Speed/Position control, Position/Speed control Control Unit: Pulse, mm, inch, degree Position data: 400 steps for each axis(1~400) Operation mode: end, keep, continuous Operation method: single, repeat
	Interpolation function	• 2/3/4/5/6 axis linear interpolation (XBM/XEM-DN32H2: 2 axis linear interpolation) • 2 axis circular interpolation • 3 axis helical interpolation(not supported in XBM / XEM-DN32H2)
	Position	Absolute method / Incremental method Position address range: -2,147,483,648 ~ 2,147,483,647(Pulse) Speed: max. 200kpps Acc/dec processing: Trapezoid-shaped , S-curve
	Origin return method	DOG + HOME (Off), DOG + HOME(On), Upper / Lower limit + HOME, DOG, High speed, / Lower limit, HOME
	Jog operation	Jog Operation, MPG Operation, Inching Operation
Pulse catch		10㎲ 4point (%IX0.0.0~%IX0.0.3), 50㎲ 4point (%IX0.0.4~%IX0.0.7)
External point Interrupt		10㎲ 4point (%IX0.0.0~%IX0.0.3), 50㎲ 4point (%IX0.0.4~%IX0.0.7)
Input filter		1,3,5,10,20,70,100ms

*1 Auto-MDIX(Automatic medium-dependent interface crossover) :
It is the function to automatically detect whether the cable connected to the Ethernet port is peer-to-peer(straight) or cross cable

Common performance specifications for CPU

Item		Specifications	Remark
		XBM-DN32H	
Program control metho		Cyclic execution of stored program, Time-driven interrupt, Process-driven interrupt	
I/O control method		Batch processing by simultaneous scan (Refresh method), Directed by program instruction	
Program language		LD(Ladder Diagram), Instruction List, SFC (Sequential Function Chart)ST (Structured Text)	
Number of instructions	Basic	28	
	Application	677	
Processing speed (Basic instruction)		40ns/step	
Program capacity		64kStep	
Max. I/O points		256 points (Main + Expansion 7 stages)	
Data area	P	P0000 ~ P2047F (32,768 points)	Input/Ouput
	M	M0000 ~ M2047F (32,768 points)	
	K	K0000 ~ K4095F (65,536 points)	
	L	L0000 ~ L4095F (65,536 points)	Link
	F	F0000 ~ F2047F (32,768 points)	
	T	100^{ms}, 10^{ms}, 1^{ms}: T0000 ~ T2047 (set by parameter)	Timer
	C	C0000 ~ C2047	Counter
	S	S00.00 ~ S127.99	Step
	D	D0000 ~ D32767	Data register
	U	U0.0 ~ U08.31	Analog Data
	Z	Z000 ~ Z127 (128word)	
	N	N0000 ~ N10239 (10,240 word)	
File resister	P	RAM area 8block (R00000 ~ R32,767)	
Total program		256	
Initial task	Initial task	1	
	Cyclic task	Max 16	
	I/O task	Max 8	
	Internal device task	Max 16	
	High Speed Counter task	Max 4	
	File resister	1	
Operation mode		RUN, STOP, DEBUG	
Self-diagnosis function		Detects errors of scan time, memory, I/O and power supply	
Program port		USB 1 channel	
Back-up method		Latch area setting in basic parameter	
Internal consumption current		540mA	
Weight		134g	

Slim

Performance specifications

Item		XBM-DR16S	XBM-DN16S	XBM-DN32S
Control method		Repetitive, cyclic, fixed cycle operation, constant scan		
I/O control method		Refresh mode (Batch processing by scan synchronization), Direct mode by instruction		
Programming language		Ladder diagram, Instruction List		
Processing speed		160 ns/Step		
Program capacity		10Kstep		
Main unit I/O points		16 points (Input:8, Output:8)	16 points (Input:8, Output:8)	32 points (Input:16, Output:16)
Max. I/O points (Main + Expansion 7 stages)		240 points		256 points
Total program		128		
Operation mode		RUN, STOP, DEBUG		
Self diagnosis		Detects errors of scan time, memory error, I/O error, battery error, power error, etc.		
Program port		RS-232C 1 channel (Loader)		
Retain data at power failure		Latch area setting at basic parameter		
Built-in functions		RS-232C/RS-485(2 ch), Pulse catch, Input filter, External interrupt, PID control, High-speed counter, Positioning*1)		
Data memory				
XBM				
Data area	P	P0000 ~ P127F (2,048 points)		
	M	M0000 ~ M255F (4,096 points)		
	K	K0000 ~ K2559F (Special area: K2600~K2559F) (40,960 points)		
	L	L0000 ~ L1279F (20,480 points)		
	F	F000 ~ F255F (4,096 points)		
	T	100ms, 10ms, 1ms: T000 ~ T255 (256) (Adjustable by parameter setting)		
	C	C000 ~ C255 (256)		
	S	S00.00 ~ S127.99		
	D	D0000 ~ D5119 (5,120 word)		
	U	U00.00 ~ U07.31 (Analog data refresh area: 256 word)		
	Z	Z000 ~ Z127 (128 word)		
	N	N0000 ~ N3935 (3,936 word)		

*1) XBM-DR16S does not have built-in positioning function.

XBM-DN32HP

16 point DC24V input wiring
(Source/Sink type)

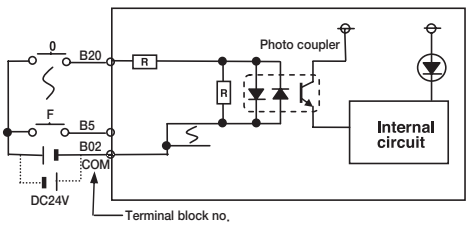

No.	Contact	No.	Contact
B20	00	A20	20
B19	01	A19	21
B18	02	A18	22
B17	03	A17	23
B16	04	A16	24
B15	05	A15	25
B14	06	A14	26
B13	07	A13	27
B12	08	A12	28
B11	09	A11	29
B10	0A	A10	2A
B09	0B	A9	2B
B08	0C	A8	2C
B07	0D	A7	2D
B06	0E	A6	2E
B05	0F	A5	2F
B04	NC	A4	P
B03	NC	A3	P
B02	IN_COM	A2	OUT_COM
B01	IN_COM	A1	OUT_COM

Type

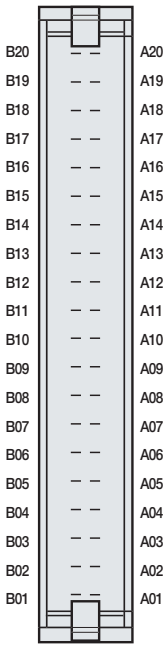

XBM-DN32HP

16 point transistor output
(Sink type)

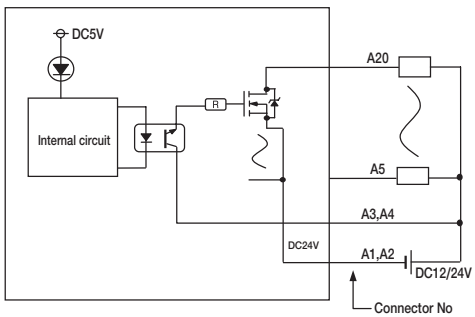

No.	Contact	No.	Contact
B20	00	A20	20
B19	01	A19	21
B18	02	A18	22
B17	03	A17	23
B16	04	A16	24
B15	05	A15	25
B14	06	A14	26
B13	07	A13	27
B12	08	A12	28
B11	09	A11	29
B10	0A	A10	2A
B09	0B	A9	2B
B08	0C	A8	2C
B07	0D	A7	2D
B06	0E	A6	2E
B05	0F	A5	2F
B04	NC	A4	P
B03	NC	A3	P
B02	IN_COM	A2	OUT_COM
B01	IN_COM	A1	OUT_COM

Type

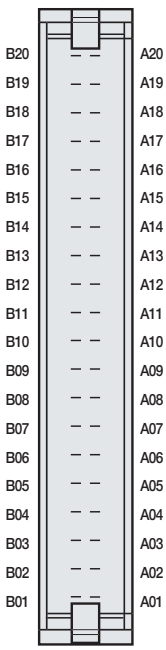

XBM-DN32H
Input wiring
(Sink / Source type)

Circuit configuration	No.	Contact	No.	Contact	Type
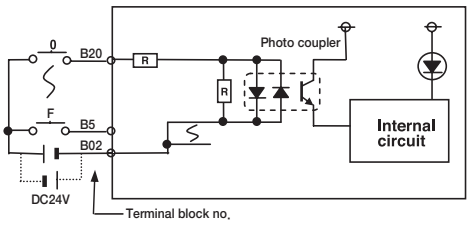	B20	00	A20	20	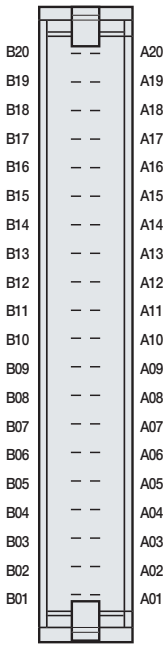
	B19	01	A19	21	
	B18	02	A18	22	
	B17	03	A17	23	
	B16	04	A16	24	
	B15	05	A15	25	
	B14	06	A14	26	
	B13	07	A13	27	
	B12	08	A12	28	
	B11	09	A11	29	
	B10	0A	A10	2A	
	B09	0B	A9	2B	
	B08	0C	A8	2C	
	B07	0D	A7	2D	
	B06	0E	A6	2E	
	B05	0F	A5	2F	
	B04	NC	A4	P	
	B03	NC	A3	P	
	B02	IN_ COM	A2	OUT_ COM	
	B01	IN_ COM	A1	OUT_ COM	

XBM-DN32H
Transistor output
(Sink type)

Circuit configuration	No.	Contact	No.	Contact	Type
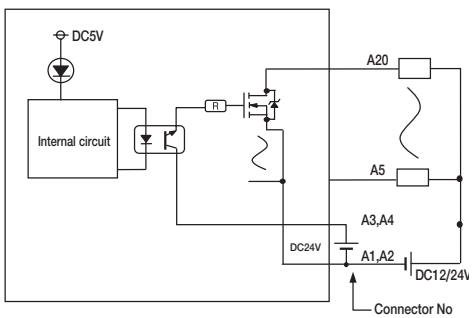	B20	00	A20	20	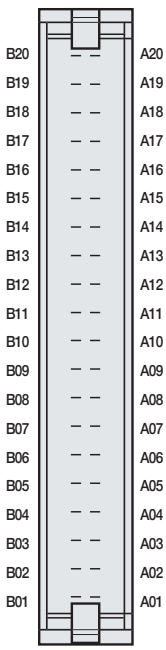
	B19	01	A19	21	
	B18	02	A18	22	
	B17	03	A17	23	
	B16	04	A16	24	
	B15	05	A15	25	
	B14	06	A14	26	
	B13	07	A13	27	
	B12	08	A12	28	
	B11	09	A11	29	
	B10	0A	A10	2A	
	B09	0B	A9	2B	
	B08	0C	A8	2C	
	B07	0D	A7	2D	
	B06	0E	A6	2E	
	B05	0F	A5	2F	
	B04	NC	A4	P	
	B03	NC	A3	P	
	B02	IN_ COM	A2	OUT_ COM	
	B01	IN_ COM	A1	OUT_ COM	

XBM-DR16S
Input wiring
(sink/source type)

Circuit configuration

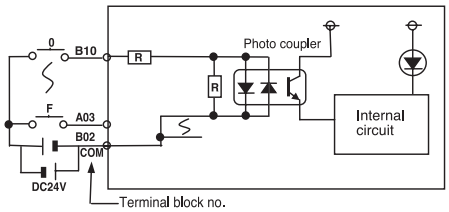

No.	Contact
TB1	0
TB2	1
TB3	2
TB4	3
TB5	4
TB6	5
TB7	6
TB8	7
TB9	COM

Type

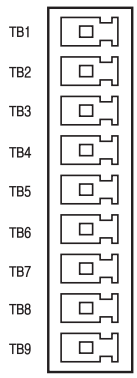

XBM-DR16S
Relay output wiring

Circuit configuration

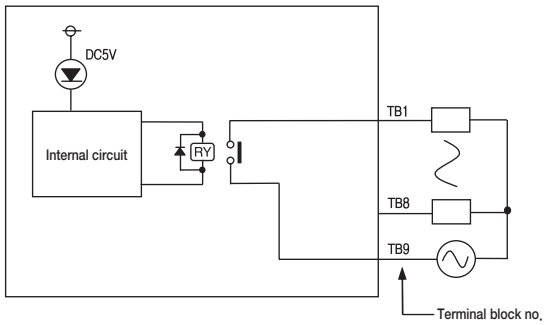

No.	Contact
TB1	20
TB2	21
TB3	22
TB4	23
TB5	24
TB6	25
TB7	26
TB8	27
TB9	COM

Type

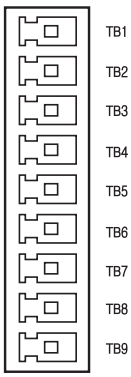

XBM-DN16S
Input wiring(sink/source type)

Circuit configuration

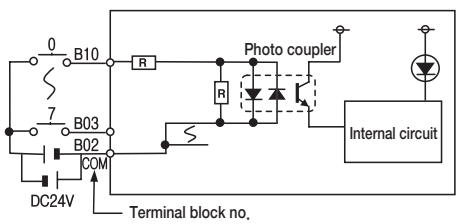

No.	Contact	No.	Contact
B10	0	A10	NC
B09	1	A09	NC
B08	2	A08	NC
B07	3	A07	NC
B06	4	A06	NC
B05	5	A05	NC
B04	6	A04	NC
B03	7	A03	NC
B02	COM	A02	NC
B01	COM	A01	NC

Type

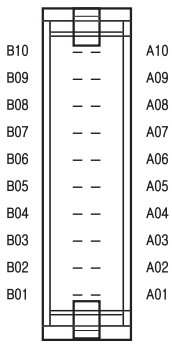

XBM-DR16S

Transistor output wiring
(sink type)

Circuit configuration

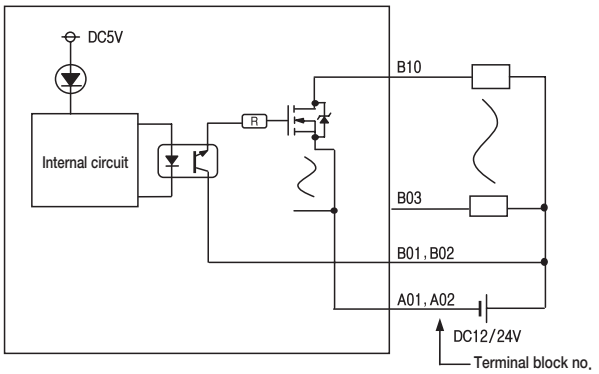

No.	Contact
B10	20
B09	21
B08	22
B07	23
B06	24
B05	25
B04	26
B03	27
B02	DC12
B01	/24V
A10	NC
A09	NC
A08	NC
A07	NC
A06	NC
A05	NC
A04	NC
A03	NC
A02	COM
A01	

Type

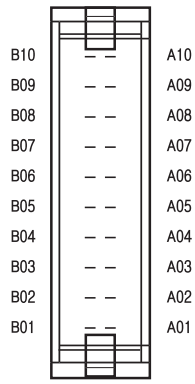

XBM-DN16S

Input wiring(sink/source type)

Circuit configuration

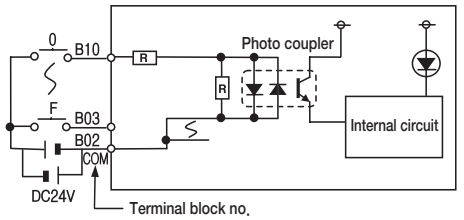

No.	Contact	No.	Contact
B10	0	A10	NC
B09	1	A09	NC
B08	2	A08	NC
B07	3	A07	NC
B06	4	A06	NC
B05	5	A05	NC
B04	6	A04	NC
B03	7	A03	NC
B02	COM	A02	COM
B01	COM	A01	COM

Type

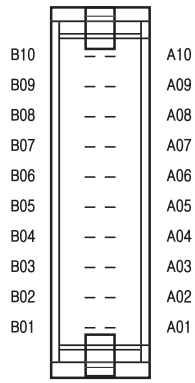

XBM-DR16S

Transistor output wiring
(sink type)

Circuit configuration

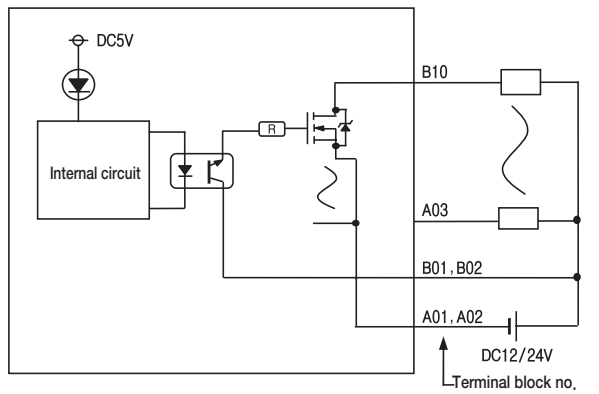

No.	Contact
B10	20
B09	21
B08	22
B07	23
B06	24
B05	25
B04	26
B03	27
B02	DC12
B01	/24V
A10	28
A09	29
A08	2A
A07	2B
A06	2C
A05	2D
A04	2E
A03	2F
A02	COM
A01	

Type

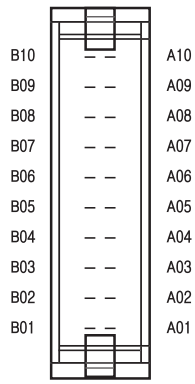

XBM Slim

Slim

Transistor output wiring
(XBM-DN16S)

Circuit configuration

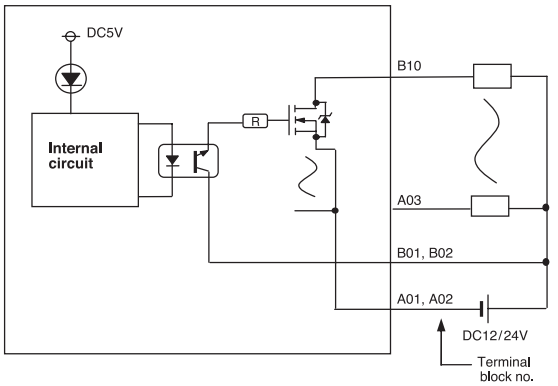

No.	Contact
B10	20
B09	21
B08	22
B07	23
B06	24
B05	25
B04	26
B03	27
B02	DC12/
B01	24V
A10	NC
A09	NC
A08	NC
A07	NC
A06	NC
A05	NC
A04	NC
A03	NC
A02	COM
A01	

Type

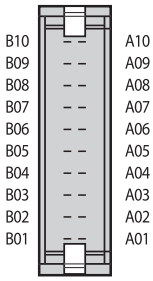

Input wiring
(XBM-DN32S)

Circuit configuration

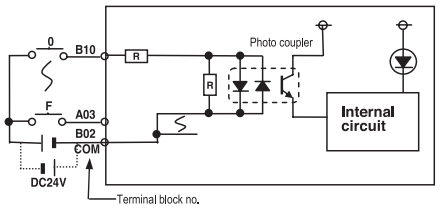

No.	Contact	No.	Contact
B10	00	A10	08
B09	01	A09	09
B08	02	A08	0A
B07	03	A07	0B
B06	04	A06	0C
B05	05	A05	0D
B04	06	A04	0E
B03	07	A03	0F
B02	COM	A02	COM
B01	COM	A01	COM

Type

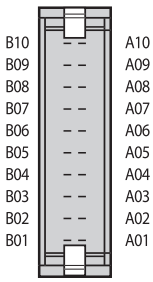

Transistor output wiring
(XBM-DN32S)

Circuit configuration

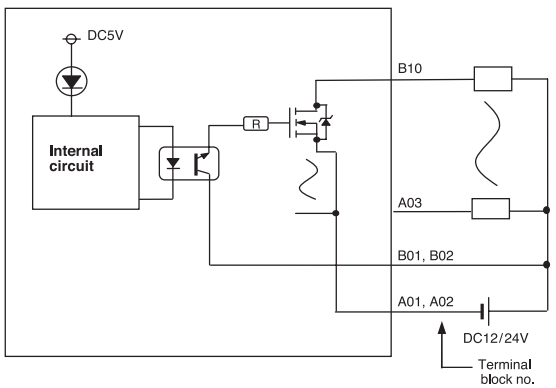

No.	Contact
B10	20
B09	21
B08	22
B07	23
B06	24
B05	25
B04	26
B03	27
B02	DC12/
B01	24V
A10	28
A09	29
A08	2A
A07	2B
A06	2C
A05	2D
A04	2E
A03	2F
A02	COM
A01	

Type

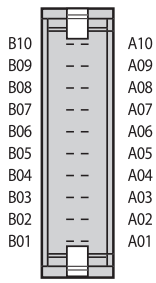

Application

XGB Series

Contents

Input/Output specification 64
Names and functions 71
Built-in functions 75
Expansion 86
DC Input 86
Transistor Output 87
Relay Output 88
DC Input/Relay Output 89
Analog Input 91
Analog Output 92
Analog Input/Output 93
RTD 94
Thermocouple 95
Temperature controller module 96
Load Cell input module 98
Positioning module 99
EtherCAT positioning module 100
High Speed counter module 102
Modular type 103
Communication 104
Option modules/Smart link 108
Software 109
XGT Panel iXP Series 110
XGT Panel eXP Series 111
XGT Panel XP Series 112
Product list 114
Dimension 117

U type

Input specification

Item		XEC-DN32U/XEC-DN32UP/XEC-DN32UA XEC-DR28U/XEC-DR28UP/XEC-DR28UA
Input point		16 point
Insulation method		Photo coupler insulation
Rated input voltage		DC24V
Rated input current		About 4mA (Contact point 0~3: about 7mA)
Operation voltage range		DC20.4~28.8V (within ripple rate 5%)
On voltage / On current		DC19V or higher / 3mA or higher
Off voltage / Off current		DC6V or lower / 1mA or lower
Input resistance		About 5.6㏀ (P00~P07: about 4.7㏀)
Response time	Off → On	1/3/5/10/20/70/100ms (Set by I/O parameter) Default: 3ms
	On → Off	
Insulation pressure		AC560Vrms/3 cycle (altitude 2000m)
Insulation resistance		10ms or more by MegOhmMeter
Common method		16 point/COM
Proper cable size		0.3~0.75mm²
Operation indicator		LED On when Input On
External connection method		8 point terminal block + 10point terminal connector
Weight		571g

Transistor output specification

Item		XEC-DN32U/XEC-DN32UP/XEC-DN32UA
Output point		16 point
Insulation method		Photo coupler insulation
Rated load voltage		DC 12/24V
Operation load voltage range		DC 10.2 ~ 26.4V
Max. load current		0.5A/1 point, 2A/1COM
Off leakage current		0.1mA or less
Max. inrush current		4A/10ms or less
Max. voltage drop when On		DC 0.4V or less
Surge absorber		Zener diode
Response time	Off → On	1ms or less
	On → Off	1ms or less (rated load, resistive load)
Common method		16 point/COM
Proper wire size		Stranded wire 0.3~0.75mm² (external diameter 2.8mm or less)
External power	Voltage	DC12/24V ± 10% (Ripple voltage 4 Vp-p or less)
	Current	10mA or less (When connecting DC24V)
Operation indicator		LED On when Output On
External connection method		8 point terminal block connector + 10 point terminal block connector
Weight		571g

High performance type

Input specification

Item		XBC/XEC-DR32H	XBC/XEC-DN32H XEC-DP32H	XBC/XEC-DR64H	XBC/XEC-DN64H XEC-DP64H	XEC-DR32H/D1 XEC-DR64H/D1
Input points		16 points		32 points		16 points
Rated input voltage		DC 24V				DC 12/24V
Rated input current		4mA (Contact 0~7: 9mA)				5/10mA (Contact 0~7 : 7/15mA)
Operation voltage range		DC 20.4 ~ 28.8V (Ripple rate < 5%)				DC 9.5~30V (Ripple rate < 5%)
On voltage / On current		DC 19V or more/3mA or more				DC 9V or more/3mA or more
Off voltage / Off current		DC 6V or less/1mA or less				DC 5V or less/1mA or less
Input resistance		5.6kΩ (P00 ~ P07: 2.7kΩ)				2.7kΩ (%IX0.0.0~%IX0.0.7:1.8kΩ)
Response time	Off → On	1/3/5/10/20/70/100 ms (Setting by CPU parameter) Initial value: 3ms				
	On → Off					

Relay output specification

Item		XBC/XEC-DR32H	XBC/XEC-DR64H
Output point		16 points	32 points
Insulation method		Relay insulation	
Rated load voltage / current		DC 24V 2A (Resistive load)/AC 220V 2A (COSØ = 1), 5A/COM	
Min. load voltage / current		DC 5V/1mA	
Max. load voltage		AC 250V, DC 125V	
Off leakage current		0.1mA (AC 220V, 60Hz)	
Max. On / Off frequency		3,600 times/hr	
Service life	Mechanical	20millions times or more	
	Electrical	Rated load voltage/current 100,000 times or more	
		AC 200V/1.5A, AC 240V/1A (COSØ = 0.7) 100,000 times or more	
		AC 200V/1A, AC 240V/0.5A (COSØ = 0.35) 100,000 times or more	
		DC 24V/1A, DC 100V/0.1A (L / R = 7ms) 100,000 times or more	
Response time	Off → On	10ms or less	
	On → Off	12ms or less	
Common method		4 points/COM	P20 ~ 2F: 4 points/COM P30 ~ 3F: 8 points/COM

Transistor output specification

Item		XBC-DN32H/XEC-DN(P)32H	XBC-DN64H/XEC-DN(P)64H
Output point		16 points	32 points
Insulation method		Photo coupler insulation	
Rated load voltage		DC 12/24V	
Load voltage range		DC 10.2 ~ 26.4 V	
Max. load voltage		0.5A / 1point (P20 ~ 23: 0.1A/point)	
Off leakage current		0.1mA or less	
Max. inrush current		4A/10ms or less	
Max. voltage drop (On)		DC 0.4V or less	
Surge absorber		Zener Diode	
Response time	Off → On	1ms or less	
	On → Off	1ms or less (Rated load, resistive load)	
Common method		4 points/COM	P20 ~ 2F: 4 points/COM P30 ~ 3F: 8 points/COM
External power supply	Voltage	DC 12/24V ± 10% (Ripple voltage 4 Vp-p or less)	
	Current	10mA or less (DC 24V connection)	

Standard type

Input specification

Item		XBC/XEC-DN20SU XBC/XEC-DR20SU	XBC/XEC-DN30SU XBC/XEC-DR30SU	XBC/XEC-DN40SU XBC/XEC-DR40SU	XBC/XEC-DN60SU XBC/XEC-DR60SU
Input point		12 points	18 points	24 points	36 points
Rated input voltage		DC 24V			
Rated input current		4mA (Contact point 0~1:16mA, 2~7 :10mA), DN20SU (DN30SU) : 4mA (Contact point 0~7: 10mA)			
Operation voltage range		DC 20.4 ~ 28.8V (Ripple rate < 5%)			
On voltage / On current		DC 19V or more/3mA or more			
Off voltage / Off current		DC 6V or less/1mA or less			
Input resistance		5.6kΩ (P00 ~ P07 : 2.7kΩ)			
Response time	Off → On	1/3/5/10/20/70/100ms (Setting by CPU parameter) Initial value : 3ms			
	On → Off				

Transistor output specification (Sink/Source type)

Item		XBC/XEC-DN20SU XBC/XEC-DR20SU XBC/XEC-DP20SU	XBC/XEC-DN30SU XBC/XEC-DR30SU XBC/XEC-DP30SU	XBC/XEC-DN40SU XBC/XEC-DR40SU XBC/XEC-DP40SU	XBC/XEC-DN60SU XBC/XEC-DR60SU XBC/XEC-DP60SU
Output point		8 points	12 points	16 points	24 points
Insulation method		Photo coupler insulation			
Rated load voltage		DC 12/24V			
Load voltage range		DC 10.2 ~ 26.4V			
Max. load voltage		0.5A/1 point, 2A / 1COM			
Off leakage current		0.1mA or less			
Max. inrush current		4A/10ms or less			
Max voltage drop (on)		DC 0.4V or less			
Surge absorbe		Zener Diode			
Response time	Off → On	DC 12/24V± 10% (Ripple voltage 4Vp-p or less)			
	On → Off	25mA or less (DC 24V connection)			

Relay output specification

Item		XBC/XEC-DR20SU	XBC/XEC-DR30SU	XBC/XEC-DR40SU	XBC/XEC-DR60SU
Output point		8 points	12 points	16 points	24 points
Insulation method		Relay insulation			
Rated load voltage/current		DC 24V 2A/AC 220V 2A (COSØ = 1), 5A/COM			
Min. load voltage/current		DC 5V/1mA			
Max. load Current		AC 250V, DC 125V			
Off leakage current		0.1mA (AC 220V, 60Hz)			
Surge absorber		-			
Response time	Off → On	10ms or less			
	On → Off	12ms or less			
Common method (/ COM)		4 points/COM (P40, P41 : 1 point/COM), (P42 P43 : 2 points/COM)			
Life-cycle	Mechanical	Rated load voltage/Current 10 million times or more			
	Electrical	AC 220V/1.5A, AC 240V/1A (COSØ= 0.7) 10 million times or more			
		AC 200V/1A, AC 240V/0.5A (COSØ= 0.35) 10 million times or more			
		DC 24V/1A, DC 100V/0.1A (L / R = 7ms) 10 million times or more			

Economic type

Input specification

Specification \ Modal		Main unit			
		XBC/XEC-DR10E XBC/XEC-DN10E	XBC/XEC-DR14E XBC/XEC-DN14E	XBC/XEC-DR20E XBC/XEC-DN20E	XBC/XEC-DR30E XBC/XEC-DN30E
Input point		6 points	8 points	12 points	18 points
Insulation method		Photo coupler insulation			
Rated input voltage		DC 24V			
Rated input current		About 4mA (Contact point 0~3: about 7mA)			
Operation voltage range		DC 20.4~28.8V (Within ripple rate 5%)			
On voltage / On current		DC 19V or higher / 3mA or higher			
Off voltage / Off current		DC 6V or lower / 1mA or lower			
Input resistance		About 5.6kΩ (%I×0.0.0~%I×0.0.3: about 2.7kΩ)			
Response time	Off → On	1 / 3 / 5 / 10 / 20 / 70 / 100ms (Set by I/O parameter) Default: 3ms			
	On → Off				
Insulation pressure		AC 560Vrms / 3 cycle (Altitude 2000m)			
Insulation resistance		10kΩ or more by MegOhmMeter			
Common method		6 points / COM	8 points / COM	12 points / COM	18 points / COM
Proper cable size		0.3㎟			
Operation indicator		LED On when Input On			
External connection method		14 point terminal block connector (M3×6 screw)		24 point terminal block connector (M3×6 screw)	
Weight		330g	340g	450g	465g
		313g	315g	418g	423g

Relay output specification

Specification \ Modal		Main unit			
		XBC/XEC-DR10E	XBC/XEC-DR14E	XBC/XEC-DR20E	XBC/XEC-DR30E
Output point		4 points	6 points	8 points	12 points
Insulation method		Relay insulation			
Rated load voltage/Current		DC 24V 2A (resistive load) / AC 220V 2A (COSF = 1), 5A /COM			
Min. load voltage/Current		DC 5V/1mA			
Max. load voltage		AC 250V, DC 125V			
Off leakage current		0.1mA (AC 220V, 60Hz)			
Max. On/Off frequency		3,600 times / hour			
Surge absorber		None			
Service life	Mechanical	20 million times or more			
	Electrical	Rated load voltage / Current 100,000 times or more			
		AC 200V / 1.5A, AC 240V / 1A (COØ = 0.7) 100,000 times or more			
		AC 200V / 1A, AC 240V / 0.5A (COØ = 0.35) 100,000 times or more			
		DC 24V / 1A, DC 100V / 0.1A (L / R = 7ms) 100,000 times or more			
Response time	Off → On	10ms or less			
	On → Off	12ms or less			
Common method		2 points / COM	4 points / COM	4 points / COM	4 points / COM
Proper cable size		Stranded cable 0.3~0.75㎟ (External diameter 2.8㎜ or less)			
Operation indicator		LED On when Output On			
External connection method		14 point terminal block connector (M3×6 screw)		24 point terminal block connector (M3×6 screw)	

Economic type

Transistor output specification (Sink / Source type)

Specification \ Modal		Main unit			
		XBC/XEC-DN10E XBC/XEC-DP10E	XBC/XEC-DN14E XBC/XEC-DP14E	XBC/XEC-DN20E XBC/XEC-DP20E	XBC/XEC-DN30E XBC/XEC-DP30E
Output point		4 points	6 points	8 points	12 points
Insulation method		Photo coupler insulation			
Rated load voltage		DC 12/24V			
Operation load voltage range		DC 10.2~26.4V			
Max. load current		0.5A/1 point, 2A/1COM			
Off leakage current		0.1mA or less			
Max. inrush current		4A/10ms or less			
Max. voltage drop when On		DC 0.4V or less			
Surge absorber		Zener diode			
Response time	Off → On	1ms less			
	On → Off	1ms less (Rated load, resistive load)			
Common method		4 point / COM			
Proper wire size		Stranded wire 0.3~0.75㎟ (External diameter 2.8㎜ or less)			
External power	Voltage	DC 12/24V±10% (Ripple voltage 4 Vp-p or less)			
	Current	25mA or less (When connecting DC 24V)			
Operation indicator		LED On when Output On			
External connection method		14 point terminal block connector (M3×6 screw)		24 point terminal block connector (M3×6 screw)	

Slim type

XBM H
Input specification

Specification \ Model		Main unit
		XBM-DN32H
Input point		16 point
Insulation method		Photo coupler insulation
Rated input voltage		DC24V
Rated input current		About 4mA (Contact point 0~3: about 5mA)
Operation voltage range		DC20.4~28.8V (within ripple rate 5%)
On voltage / On current		DC19V or higher / 3mA or higher
Off voltage / Off current		DC6V or lower / 1mA or lower
Input resistance	Mechanical	About 5.6㏀ / (P00~P03: about 4.7㏀)
Response time	Off → On	1/3/5/10/20/70/100㎳ (Set by I/O parameter) Default: 3㎳
	On → Off	
Insulation pressure		AC560Vrms / 3 cycle (altitude 2000m)
Insulation resistance		10㏁ or more by MegOhmMeter
Common method		16 point / COM
Proper cable size		0.3~0.75㎟
Operation indicator		LED On when Input On
External connection method		40point terminal connector
Weight		134g

Transistor output specification

Specification \ Model		Main unit
		XBM-DN32H
Output point		16 point
Insulation method		Photo coupler insulation
Rated load voltage		DC 12/24V
Operation load voltage range		DC 10.2 ~ 26.4V
Max. load current		0.5A / 1 point, position (p00,p01,p02,p03) 0.1A/1 point 2A / 1COM
Off leakage current		0.1mA or less
Max. inrush current		4A / 10㎳ or less
Max. voltage drop when On		DC 0.4V or less
Surge absorber		Zener diode
Response time	Off → On	1㎳ or less
	On → Off	1㎳ or less (rated load, resistive load)
Common method		16 point / COM
Proper wire size		Stranded wire 0.3~0.75㎟ (external diameter 2.8mm or less)
External power	Voltage	DC12/24V ±10% (Ripple voltage 4 Vp-p or less)
	Current	10mA or less (When connecting DC24V)
Operation indicator		LED On when Output On
External connection method		4 point terminal block connector
Weight		134g

Slim type

Input specification

Item		XBM-DR16S	XBM-DN16S	XBM-DN32S
Input point		8 points	8 points	16 points
Rated input voltage		DC 24V		
Rated input current		4mA (00 ~ 03: 7mA)		
Operation voltage range		DC 20.4 ~ 28.8V (Ripple rate < 5%)		
Response time	Off → On	1/3/5/10/20/70/100ms (Set by CPU parameter) Default : 3ms		
	On → Off			
Common method		8 points/COM		16 points/COM

Relay output specification

Item		XBM-DR16S
Output point		8 points
Insulation method		Relay insulation
Rated load voltage / current		DC 24V 2A (Resistive load)/AC 220V 2A (COSØ = 1), 5A/COM
Min. load voltage / current		DC 5V/1mA
Max. load voltage		AC 250V, DC 125V
Off leakage current		0.1mA (AC 220V, 60Hz)
Max. On / Off frequency		3,600 times/hr
Service life	Mechanical	20 millions times or more
	Electrical	Rated load voltage/Current 100,000 times or more
		AC 200V/1.5A, AC 240V/1A (COSØ = 0.7) 100,000 times or more
		AC 200V/1A, AC 240V/0.5A (COSØ = 0.35) 100,000 times or more
		DC 24V/1A, DC 100V/0.1A (L / R = 7ms) 100,000 times or more
Response time	Off → On	10ms or less
	On → Off	12ms or less
Common method		8 points / COM

Transistor output specification

Item		XBM-DN16S	XBM-DN32S
Output point		8 point	16 point
Insulation method		Photo coupler insulation	
Rated load voltage		DC 12/24V	
Load voltage range		DC 10.2 ~ 26.4V	
Max. load voltage		0.2A/1 point (P20 ~ 23: 0.1A/Point)	
Max. inrush current		4A/10ms or less	
Max. voltage drop (On)		DC 0.4V or less	
Response time	Off → On	1ms or less	
	On → Off	1ms or less (Rated load, Resistive load)	
Common method		8 point / COM	16 point / COM
Extenal power supply	Voltage	DC 12/24V ±10% (Ripple voltage 4 Vp-p or less)	
	Current	25mA or less (DC 24V connection)	
External connection method		20pin connector	

Names and functions

Block type unit (U)

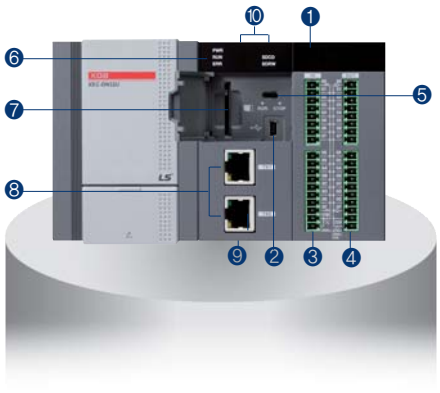

No.	Name	Descritpions	Remark
❶	**LED for displaying input, output**	Displays the On/Off status of input, output contacts	
❷	**Connector for PADT**	Connector (USB 1channel) to access to XG5000	
❸	**Input terminal block**	Terminal block receiving the actual input signal	
❹	**Output terminal block**	Terminal block outputting the actual output signal	
❺	**RUN/STOP mode switch**	Sets the basic unit's operation mode. - STOP → RUN : Program's operation is executed. - RUN → STOP : Program's operation is stopped. (In case of STOP, the remote operation is available.)	
❻	**Status display LED**	Displays the basic unit's operation status. - PWR (Red light On) : The power is supplied. - RUN (Green light On) : During RUN mode - ERR (Flickering red light) : Occurrence of errors during operation - STATE (Red light On/flickering Red light): When the SD card is installed, the red light is turned On; when the SD card error occurs, the red light is flickering. - RD/WR (Flickering red light) : During SD card Write	
❼	**SD card connector**	Connector with the SD memory card	
❽	**Terminal block for the embedded Enet communication**	Terminal block for the embedded Enet communication	
❾	**Terminal block for the embedded communication**	Terminal block (lower part of the product) for the embedded RS-232C/485 communication	
❿	**Battery holder**	Battery holder (upper part of the product)	

Block type unit
(High performance,
Standard, Economic)

No.	Name	Descriptions	Descritpions	Remark
❶	**Input LED**	Input indication	Red On: Input signal On Red Off: Input signal Off	
❷	**Condition LED**	PWR: Power indication	Red On: Power On Red Off: Power Off	
		RUN: RUN indication	Green On: PLC Run Green Off: PLC Stop	
		ERR: Error indication	Red On-and-Off: PLC Error Red Off: PLC Normal condition	
❸	**Output LED**	Output LED	On: Output signal On Off: Output signal Off	
❹	**Expansion module connector**	Expansion module connector	Connection of expansion module (I/O, Special function, Communication)	
❺	**PADT connector**	PADT connection	Connector for XG5000/XG-PD connection	
❻	**Mode switch**	Mode setting	Setting Run/Stop mode of PLC	
❼	**Input terminal block**	Input wiring connection	-	
❽	**Output terminal block**	Ouput wiring connection	-	
❾	**Built-in RS-485 connector**	Built-in RS-485 connection	RS-485 +/- terminal connection	
❿	**Built-in RS-232C connector**	Built-in RS-232C connection	RS-232C T×D, R×D, SG terminal connection	
⓫	**Power terminal**	Power supply terminal	AC 100-240V power supply	
⓬	**Option module slot**	Slot for option module	-	

Modular type unit
(XBM-DN32H)

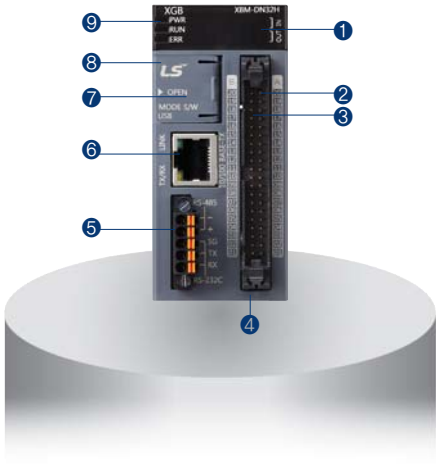

No.	Name	Descritpions
❶	**LED for displaying input, output**	Displays the On/Off status of input, output contacts
❷	**Input connector**	Terminal block receiving the actual input signal
❸	**Output connector**	Terminal block outputting the actual output signal
❹	**Power supply connector**	Power supply connector (24V)
❺	**Built-in serial communication connecting connector**	Built-in RS-232C/485 connecting connector
❻	**Built-in ethernet connecting connector**	Built-in Enet connecting connector
❼	**PADT connecting connector**	PADT connecting connector
❽	**RUN/STOP mode switch**	• Sets the basic unit's operation mode. - STOP→RUN : Program's operation is executed. - RUN→STOP : Program's operation is stopped. (In case of STOP, the remote operation is available.)
❾	**Status display LED**	• Displays the basic unit's operation status. - PWR(Red light On) : The power is supplied. - RUN(Green light On) : During RUN mode - ERR(Flickering red light) : Occurrence of errors during operation - STATE(Red light On/flickering Red light): When the SD card is installed, the red light is turned On; when the SD card error occurs, the red light is flickering. - RD/WR(Flickering red light) : During SD card Write

Modular type unit
(XBM-DR16S, DN16S, DN32S)

No.	Name	Descriptions	Descritpions	Remark
❶	**Input LED**	Input indication	Red On: Input signal On Red Off: Input signal Off	
❷	**Condition LED**	PWR: Power indication	Red On: Power On Red Off: Power Off	
		RUN: RUN indication	Green On: PLC Run Green Off: PLC Stop	
		ERR: Error indication	Red On-and-Off: PLC Error Red Off: PLC Normal condition	
❸	**Output LED**	Output LED	On: Output signal On Off: Output signal Off	
❹	**Expansion module connector**	Expansion module connector	Connection of expansion module (I/O, Special function, Communication)	
❺	**PADT connector**	PADT connection	Connector for XG5000/XG-PD connection	
❻	**Mode switch**	Mode setting	Setting Run / Stop mode of PLC	
❼	**Input connector / Terminal block**	Input wiring connection	–	
❽	**Output connector / Terminal block**	Ouput wiring connection	–	
❾	**Built-in RS-485 connector**	Built-in RS-485 connection	RS-485 +/- terminal connection	
❿	**Built-in RS-232C connector**	Built-in RS-232C connection	RS-232C T×D, R×D, SG terminal connection	
⓫	**Power connector**	Power supply connection	DC 24V power supply	

XGB U

Performance specifications

Items		Specification	Remark
PID control		Control by instruction, auto-tunning, PWM output, Forced output, Operation scan time setting, Antiwindup, Delta MV, PV tracking, Hybrid operation, Cascade operation	
Serial	Protocol	Dedicated protocol, Modbus protocol User defined protocol , LS bus (inverter protocol)	Embedded00 P2P:01
	Channel	RS-232C 1 port and RS-485 1 port	
Ethernet	Transfer spec	Cable: 100Base-TX Speed: 100Mbps Auto-MDIX*1 IEEE 802.3	
	Topology	Line, star	
	Diagnosis	Module information, service condition	
	Protocol	XGT dedicated Modbus TCP/IP user define frame	Embedded01 P2P:02 High-speed link:01
	Service	P2P, High Speed link, Remote connection	
Datalog	Group	Max 10 group	
	Data set	32 per group	
	Extension	csv file	
	File size	Max 16Mbyte	
	SD memory type	SD,SDHC type (Recommand: SanDisk,Transcend)	
	Memory size	Max 16GB	
	File system	FAT32	
High speed counter	Performance	1-phase : 100MHz 8 channels 2-phase : 50MHz 4 channels	
	Counter mode	4 counter modes are supported based on input pulse and INC/DEC method • 1 pulse operation Mode : INC/DEC count by program • 1 pulse operation Mode : INC/DEC count by phase B pulse input • 2 pulse operation Mode : INC/DEC count by input pulse • 2 pulse operation Mode : INC/DEC count by difference of phase	
	Function	• Internal/external preset • Latch counter • Compare output • No. of rotation per unit time	

*1 Auto-MDIX (Automatic medium-dependent interface crossover) :
It is the function to automatically detect whether the cable connected to the Ethernet port is peer-to-peer (straight) or cross cable

APPLICSTION

XGB U

Built-in positioning function
(XBC/XEC-DxxxUP)

Items	Specification	Remark
Basic function	No. of control axi: 4axis Control Method:Position, Speed, Speed/Position, Feed Control Control Unit: Pulse ,mm, inch, degree Positioning Data: Each axis can have up to 400 data (Step number:1~400) Operation pattern: End, Keep, Continuous Operation method: Singular, Repeat	Availavle on Analog
Interpolation	2/3/4 axis linear interpolation 2 axis circular interpolation 3 axis helical interpolation	
Positioning	Method: Absolute/Incremental method Address range: 2, 147, 483, 648~2, 147, 483, 647 Speed: Max 2Mpps (1~2,000,000pps) Acc /Dec process: Trapezoid type, S-type	
Homing method	DOG+HOME (Off), DOG+HOME (On), Upper limit + HOME, DOG, High speed, Upper/Lower limit, HOME	
Manual operation	Jog operation, MPG operation, Inching operation	
Encoder input	Line drive (RS-422A) input 1Channel (Max 200kpps)	

Built-in analog function
(XBC/XEC-DxxxUA)

Items			Specification		Remark
Analog input	Channels		4channels (current/voltage)		Availavle on Analog
	Specification	Input Range	Voltage: 1~5V, 0~5V, 0~10V, -10~10V Current: 4~20㎃, 0~20㎃		
			Current input or Voltage input can be selected through the external terminal wiring setting.		
		Input resistance	1MΩ or more (voltage input), 250Ω (current iput)		
		Max. resolution	1/16000		
			0.250㎷ (1 ~ 5V) 0.3125㎷ (0 ~ 5V) 0.625㎷ (0 ~ 10V) 1.250㎷ (±10V)	1.0㎂ (4 ~ 20㎃) 1.25㎂ (0 ~ 20㎃)	
		Accuracy	±0.2% or less (When ambient temperature is 25℃) ±0.3% or less (When ambient temperature is 0 ~ 55℃)		
Analog output	Channels		Voltage 2 channels ,Current 2 channels		
	Specification	Output Range	Voltage: 1~5V, 0~5V, 0~10V, -10~10V Current: 4~20㎃, 0~20㎃		
			Output ranges are set in user program or I/O parameter per each channel.		
		Load resistance	1MΩ or more(voltage output), 600Ω or less(current output)		
		Max. resolution	1/16000		
			0.250㎷ (1 ~ 5V) 0.3125㎷ (0 ~ 5V) 0.625㎷ (0 ~ 10V) 1.250㎷ (±10V)	1.0㎂ (4 ~ 20㎃) 1.25㎂ (0 ~ 20㎃)	
		Accuracy	±0.2% or less (When ambient temperature is 25℃) ±0.3% or less (When ambient temperature is 0 ~ 55℃)		

XGB H/SU/E, XBM S

Performance specifications

Classification		Description			
		Block type unit			Modular type
		H	SU	E	XBM
Count input Signal	Signal	A-phase, B-phase			
	Input type	Voltage input (Open collector)			
	Signal level	DC 24V			
Max. count speed		100kpps	100kpps	4kpps	20kpps
Number of channels	1 phase	100kpps 4ch/20kpps 4ch	100kpps 2ch/20kpps 6ch	4kpps 4ch	20kpps 4ch
	2 phase	50kpps 2ch/10kpps 2ch	50kpps 1ch 8kpps 3ch	2kpps 2ch	2 multiplication: 10kpps
		50kpps 2ch/8kpps 2ch			4 multiplication: 8kpps
Count range		Signed 32bit (-2,147,483,648 ~ 2,147,483,647)			
Count mode (Program setting)		Linear count (If 32bit range exceeded, Carry / Borrow occurs)			
		Ring count (Repeated count within setting range)			
Input mode (Program setting)		1-phase input			
		2-phase input			
		CW/CCW input			
Signal type		Voltage			
Up/Down setting	1 phase input	Increasing/Decreasing operation setting by B-phase input			
		Increasing/Decreasing operation setting by program			
	2 phase input	Automatic setting by difference in phase			
	CW/CCW	A-phase input: increasing operation			
		B-phase input: decreasing operation			
Multiplication function	1 phase input	1 multiplication			
	2 phase input	4 multiplication			
	CW/CCW	1 multiplication			
Control input	Signal	Preset instruction input			
	Signal level	DC 24V input type			
	Signal type	Voltage			
External output	Output points	2 point / channel (for each channel): output contact point of basic unit available		1 point / channel (for each channel): output contact point of basic unit available	
	Type	Select program setting, signal-compared (>, >=, =, <=, <) or section compared output (Included or excluded)			
	Output type	Relay, Open-collector output (Sink)			
Count enable		To be set through program			
Preset function		To be set through terminal (contact) or program			
Auxiliary mode		Count latch			

Input specification

Item	Description
Input voltage	24V DC (20.4V ~ 28.8V)
Input current	4mA
On voltage (min.)	20.4V
Off voltage (max.)	6V

APPLICSTION

XBM HP

Built in function

Items			Specification XBM-DN32HP	Remark
XBM HP Built-in Function	PID control		Control by instruction, auto-tuning, PWM output, Forced output, Operation scan time setting,Antiwindup, Delta MV, SV lamp, Hybrid operation, Cascade operation	
	Cnet	PID control	Dedicated protocol(XGT) Modbus protocol User defined protocol , LS bus(inverter protocol)	
		Channel	RS-232C 1 port and RS-485 1 port	
	Enet	Transfer spec	Cable: 100Base-TX Speed: 100Mbps Auto-MDIX*1 IEEE 802.3	
		Topology	Star	
		Diagnosis	Module information, Service condition	
		Protocol	XGT dedicated, Modbus TCP/IP, user define frame	
		Service	P2P, High Speed link, Remote connection,SMTP,SNTP, Auto scan	
	High Speed Counte	Performance	1 phase: 200㎑(2 phase: 100㎑)	
		channels	1phase 4 channels, 2 phase 2 channels	
		Counter mode	4 counter modes are supported based on input pulse and INC/DEC method • 1 pulse operation Mode : INC/DEC count by program • 1 pulse operation Mode : INC/DEC count by phase B pulse input • 2 pulse operation Mode : INC/DEC count by input pulse • 2 pulse operation Mode : INC/DEC count by difference of phase	
		Function	• Internal/external preset • Latch counter • Compare output • No. of rotation per unit time	
	Position	Basic function	No. of control axis: 2axis Pulse output type : pulse+ direction Position data: 80 steps for each axis(1~80) Operation mode: end, keep, continuous Operation method: single, repeat	
		Interpolation function	• 2/3/4/5/6 axis linear interpolation(XBMH: 2 axis linear interpolation) • 2 axis circular interpolation • 3 axis helical interpolation(not supported in XBMH)	
		Position	Absolute method / Incremental method Position address range: -2,147,483,648 ~ 2,147,483,647(Pulse) Speed range: 1~100,000pps(1pps unit) Acc/dec processing: Trapezoid-shaped	
		Origin return method	DOG + HOME (Off), DOG + HOME(On), Upper/Lower limit + HOME, DOG, High speed, Upper/Lower limit, HOME	
		Jog operation	Jog Operation, MPG Operation, Inching Operation	
	Pulse catch		10㎲ 4point(P0000 ~ P0003), 50㎲ 4point(P0004 ~ P0007)	
	External point Interrupt		10㎲ 4point(P0000 ~ P0003), 50㎲ 4point(P0004 ~ P0007)	
	Input filter		1,3,5,10,20,70,100㎳	

*1 Auto-MDIX(Automatic medium-dependent interface crossover) : It is the function to automatically detect whether the cable connected to the Ethernet port is peer-to-peer(straight) or cross cable

XBM H

Built in function

Items			Specification XBM-DN32H	Remark
Built-in Function	PID control		Control by instruction, auto-tuning, PWM output, Forced output, Operation scan time setting,Antiwindup, Delta MV, SV lamp, Hybrid operation, Cascade operation	
	Cnet	PID control	Dedicated protocol(XGT) Modbus protocol User defined protocol , LS bus(inverter protocol)	
		Channel	RS-232C 1 port and RS-485 1 port	
	Enet	Transfer spec	Cable: 100Base-TX Speed: 100Mbps Auto-MDIX*1 IEEE 802.3	
		Topology	Star	
		Diagnosis	Module information, Service condition	
		Protocol	XGT dedicated, Modbus TCP/IP, user define frame	
		Service	P2P, High Speed link, Remote connection,SMTP,SNTP, Auto scan	
	High Speed Counte	Performance	1 phase: 200㎑(2 phase: 100㎑)	
		channels	1phase 4 channels, 2 phase 2 channels	
		Counter mode	4 counter modes are supported based on input pulse and INC/DEC method • 1 pulse operation Mode : INC/DEC count by program • 1 pulse operation Mode : INC/DEC count by phase B pulse input • 2 pulse operation Mode : INC/DEC count by input pulse • 2 pulse operation Mode : INC/DEC count by difference of phase	
		Function	• Internal/external preset • Latch counter • Compare output • No. of rotation per unit time	
	Position	Basic function	No. of control axis: 2axis Pulse output type : pulse+ direction Position data: 80 steps for each axis(1~80) Operation mode: end, keep, continuous Operation method: single, repeat	
		Interpolation function	2/3/4/5/6 axis linear interpolation(XBMH: 2 axis linear interpolation) 2 axis circular interpolation 3 axis helical interpolation(not supported in XBMH)	
		Position	Absolute method / Incremental method Position address range: -2,147,483,648 ~ 2,147,483,647(Pulse) Speed range: 1~100,000pps(1pps unit) Acc/dec processing: Trapezoid-shaped	
		Origin return method	DOG + HOME (Off), DOG + HOME(On), Upper/Lower limit + HOME, DOG, High speed, Upper/Lower limit, HOME	
		Jog operation	Jog Operation, MPG Operation, Inching Operation	
	Pulse catch		10㎲ 4point(P0000 ~ P0003), 50㎲ 4point(P0004 ~ P0007)	
	External point Interrupt		10㎲ 4point(P0000 ~ P0003), 50㎲ 4point(P0004 ~ P0007)	
	Input filter		1,3,5,10,20,70,100㎳	

*1 Auto-MDIX(Automatic medium-dependent interface crossover) : It is the function to automatically detect whether the cable connected to the Ethernet port is peer-to-peer(straight) or cross cable

APPLICSTION

Parts designation | Block type unit

High performance type
(XBC-H)

Terminal No.	Name		Usage	
	1-phase	2-Phase	1-phase	2-Phase
P000	Ch0 counter input	Ch0 A-phase input	Counter input terminal	A-phase input
P001	Ch1 counter input	Ch0 B-phase input	Counter input terminal	B-phase input
P002	Ch2 counter input	Ch2 A-phase input	Counter input terminal	A-phase input
P003	Ch3 counter input	Ch2 B-phase input	Counter input terminal	B-phase input
P004	Ch4 counter input	Ch4 A-phase input	Counter input terminal	A-phase input
P005	Ch5 counter input	Ch4 B-phase input	Counter input terminal	B-phase input
P006	Ch6 counter input	Ch6 A-phase input	Counter input terminal	A-phase input
P007	Ch7 counter input	Ch6 B-phase input	Counter input terminal	B-phase input
P008	Ch0 preset 24V	Ch0 preset 24V	Preset input terminal	Preset input terminal
P009	Ch1 preset 24V	-	Preset input terminal	No use
P00A	Ch2 preset 24V	Ch2 preset 24V	Preset input terminal	Preset input terminal
P00B	Ch4 preset 24V	-	Preset input terminal	No use
P00C	Ch5 preset 24V	Ch4 preset 24V	Preset input terminal	Preset input terminal
P00D	Ch6 preset 24V	-	Preset input terminal	No use
P00E	Ch7 preset 24V	Ch6 preset 24V	Preset input terminal	Preset input terminal
P00F	Ch8 preset 24V	-	Preset input terminal	No use
COM0	Input common	Input common	Input common	Input common

High performance type
(XEC-H)

Terminal No.	Name		Usage	
	1-phase	2-Phase	1-phase	2-Phase
IX0.0.0	Ch0 counter input	Ch0 A-phase input	Counter input terminal	A-phase input
IX0.0.1	Ch1 counter input	Ch0 B-phase input	Counter input terminal	B-phase input
IX0.0.2	Ch2 counter input	Ch2 A-phase input	Counter input terminal	A-phase input
IX0.0.3	Ch3 counter input	Ch2 B-phase input	Counter input terminal	B-phase input
IX0.0.4	Ch4 counter input	Ch4 A-phase input	Counter input terminal	A-phase input
IX0.0.5	Ch5 counter input	Ch4 B-phase input	Counter input terminal	B-phase input
IX0.0.6	Ch6 counter input	Ch6 A-phase input	Counter input terminal	A-phase input
IX0.0.7	Ch7 counter input	Ch6 B-phase input	Counter input terminal	B-phase input
IX0.0.8	Ch0 preset 24V	Ch0 preset 24V	Preset input terminal	Preset input terminal
IX0.0.9	Ch1 preset 24V	-	Preset input terminal	No use
IX0.0.10	Ch2 preset 24V	Ch2 preset 24V	Preset input terminal	Preset input terminal
IX0.0.11	Ch4 preset 24V	-	Preset input terminal	No use
IX0.0.12	Ch5 preset 24V	Ch4 preset 24V	Preset input terminal	Preset input terminal
IX0.0.13	Ch6 preset 24V	-	Preset input terminal	No use
IX0.0.14	Ch7 preset 24V	Ch6 preset 24V	Preset input terminal	Preset input terminal
IX0.0.15	Ch8 preset 24V	-	Preset input terminal	No use
COM0	Input common	Input common	Input common	Input common

Standard type
(XBC-SU)

Terminal No.	Name		Usage	
	1-phase	2-Phase	1-phase	2-Phase
P000	Ch0 counter input	Ch0 A-phase input	Counter input terminal	A-phase input
P001	Ch1 counter input	Ch0 B-phase input	Counter input terminal	B-phase input
P002	Ch2 counter input	Ch2 A-phase input	Counter input terminal	A-phase input
P003	Ch3 counter input	Ch2 B-phase input	Counter input terminal	B-phase input
P004	Ch4 counter input	Ch4 A-phase input	Counter input terminal	A-phase input
P005	Ch5 counter input	Ch4 B-phase input	Counter input terminal	B-phase input
P006	Ch6 counter input	Ch6 A-phase input	Counter input terminal	A-phase input
P007	Ch7 counter input	Ch6 B-phase input	Counter input terminal	B-phase input
P008	Ch0 preset 24V	Ch0 preset 24V	Preset input terminal	Preset input terminal
P009	Ch1 preset 24V	-	Preset input terminal	No use
P00A	Ch2 preset 24V	Ch2 preset 24V	Preset input terminal	Preset input terminal
P00B	Ch4 preset 24V	-	Preset input terminal	No use
P00C	Ch5 preset 24V	Ch4 preset 24V	Preset input terminal	Preset input terminal
P00D	Ch6 preset 24V	-	Preset input terminal	No use
P00E	Ch7 preset 24V	Ch6 preset 24V	Preset input terminal	Preset input terminal
P00F	Ch8 preset 24V	-	Preset input terminal	No use
COM0	Input common	Input common	Input common	Input common

Parts designation | Block type unit

Economic type
(XBC-E)

Terminal No.	Name		Usage	
	1-phase	2-Phase	1-phase	2-Phase
P000	Ch0 counter input	Ch0 A-phase input	Counter input terminal	A-phase input
P001	Ch1 counter input	Ch0 B-phase input	Counter input terminal	B-phase input
P002	Ch2 counter input	Ch2 A-phase input	Counter input terminal	A-phase input
P003	Ch3 counter input	Ch2 B-phase input	Counter input terminal	B-phase input
P004	Ch0 preset 24V	Ch0 preset 24V	Preset input terminal	Preset input terminal
P005	Ch1 preset 24V	-	Preset input terminal	No use
P006	Ch2 preset 24V	Ch2 preset 24V	Preset input terminal	Preset input terminal
P007	Ch4 preset 24V	-	Preset input terminal	No use
COM0	Input common	Input common	Common terminal	Common terminal

Parts designation | Modular type unit

Modular type
(XBM)

Terminal No.	Name		Usage	
	1-phase	2-Phase	1-phase	2-Phase
P000	Ch0 counter input	Ch0 A-phase input	Counter input terminal	A-phase input
P001	Ch1 counter input	Ch0 B-phase input	Counter input terminal	B-phase input
P002	Ch2 counter input	Ch2 A-phase input	Counter input terminal	A-phase input
P003	Ch3 counter input	Ch2 B-phase input	Counter input terminal	B-phase input
P004	Ch0 preset 24V	Ch0 preset 24V	Preset input terminal	Preset input terminal
P005	Ch1 preset 24V	-	Preset input terminal	No use
P006	Ch2 preset 24V	Ch2 preset 24V	Preset input terminal	Preset input terminal
P007	Ch3 preset 24V	-	Preset input terminal	No use
COM0	Input common	Input common	Common terminal	Common terminal

Wiring

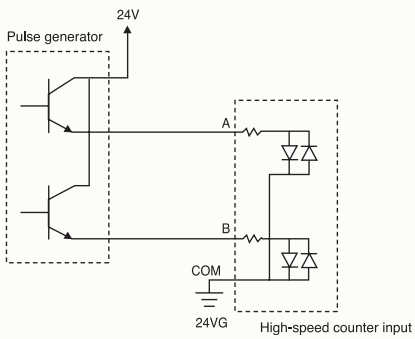

Voltage output encoder

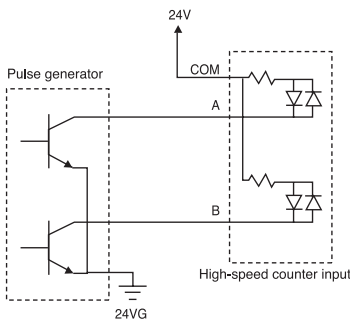

Open collector encoder

APPLICSTION

Performance specification

Classification		Description		
		Block type unit		Modular type
		H-type	SU-type	S-type
No. of control axis		2 axes		
Interpolation		2-axis linear interpolation		
Control mode		Position control, Speed control, Speed/Position switching control, Position /Speed switching control		
Control unit		Pulse		
Positioning data		30-step pattern for each axis (XBC: 80step) (operation step number : 1~ 30, XBC : 1~ 80)		
Positioning monitor		Dedicated monitoring function for positioning in XG5000		
Back-up		Permanent backup of downloaded parameter (FLASH memory)		
		2-month Super Cap.backup of parameter / Data modified during operation(XBM) battery back-up (XBC)		
		Permanent backup of parameter / Data in RAM by instruction (FLASH memory)		
Positioning	Positioning method	Absolute/incremental method		
	Positioning range	-2,147,483,648 ~ 2,147,483,647		
	Speed range	1 ~ 100,000 (pulse/sec)		
	Acceleration / Deceleration type	Trapezoidal acceleration/Deceleration		
	Acceleration / Deceleration time	1 ~ 10,000㎳ (4 patterns each can be set)		
Max. output pulse		100 Kpps		
Max. distance of connection		2m		

※ Economic block type unit (E-type) dose not support built-in positioning functions

Electrical specification

	Signal	Rated input voltage	Load voltage range	Max. load current / Inrush current	Max. voltage drop (On)	Leakage current (Off)	Response time
Output	Output pulse	DC 5~24V	DC 4.75~26.4V	100mA (1 point) 1A/10ms or less	DC 0.3V or less	0.1mA or less	100㎲ or less
	Signal	**Rated input voltage / Current**	**Load voltage range**	**On voltage / Current**	**Off voltage / Current**	**Input resistance**	**Response time**
Input	External high limit	DC 24V/7mA	DC 20.4 ~ 28.8V	DC 19V/5.7mA or more	DC 6V/1.8mA or less	3.3Ω	0.5ms or less
	External low limit						
	Approximate zero	DC 24V/4mA		DC 19V/3.4mA or more	DC 6V/1.1mA or less	5.6Ω	
	zero						

I/O specifications | Block type unit

High performance type
(XBC/XEC-H)

Item	XBC pin number (XEC pin number)		Signal name		Direction of positioning signal to external	Operating condition
	X axis	Y axis				
Input	P00008 (%IX0.0.8)	P0000A (%IX0.0.10)	Limit L	Low limit	←	4mA / 24V
	P00009 (%IX0.0.9)	P0000B (%IX0.0.11)	Limit H	High limit	←	
	P0000C (%IX0.0.12)	P0000E (%IX0.0.14)	DOG	Near point	←	
	P0000D (%IX0.0.13)	P0000F (%IX0.0.15)	Origin	Zero signal (+24V)	←	
	COM		Input COM	Common	←	
Output	P00020 (%QX0.0.0)	P00021 (%QX0.0.1)	Pulse	Pulse/CW (Open collector)	→	DC 12~24V
	P00022 (%QX0.0.2)	P00023 (%QX0.0.3)	Direction	Direction/CCW (Open collector)	→	
	P		DC 12V~24V	External power supply	→	
	COM 0 ~ 3		Output COM	External 24V GND	→	

Standard type
(XBC/XEC-SU)

Item	XBC pin number		Signal name		Direction of positioning signal to external	Operating condition
	X axis	Y axis				
Input	P00008 (%IX0.0.8)	P0000A (%IX0.0.10)	Limit L	Low limit	←	4mA / 24V
	P00009 (%IX0.0.9)	P0000B (%IX0.0.11)	Limit H	High limit	←	
	P0000C (%IX0.0.12)	P0000E (%IX0.0.14)	DOG	Near point	←	
	P0000D (%IX0.0.13)	P0000F (%IX0.0.15)	Origin	Zero signal (+24V)	←	
	COM		Input COM	Common	←	
Output	P00040 (%QX0.0.0)	P00041 (%QX0.0.1)	Pulse	Pulse/CW (Open collector)	→	DC 12~24V
	P00042 (%QX0.0.2)	P00043 (%QX0.0.3)	Direction	Direction/CCW (Open collector)	→	
	P		DC 12V~24V	External power supply	→	
	COM 0~3		Output COM	External 24V GND	→	

I/O specifications | Modular type unit

Standard type

Item	XBM pin number		Signal name		Direction of positioning signal to external	Operating condition
	X axis	Y axis				
Input	P00000	P00002	Limit L	Low limit	←	Edge
	P00001	P00003	Limit H	High limit	←	Edge
	P00004	P00006	DOG	Near point	←	Edge
	P00005	P00007	Origin	Zero signal (+24V)	←	Edge
	COM		Input COM	Common	←	-
Output	P00020	P00021	Pulse	Pulse/CW (Open collector)	→	-
	P00022	P00023	Direction	Direction/CCW (Open collector)	→	-
	12/24V		DC 12/24V	External power supply	→	-
	COM		Output COM	External 24V GND	→	-

APPLICSTION

Performance specification
(PID)

Classification		Description		
		Block type unit		Modular type
		H	SU	S
No. of control loop		16-loop independent control		
Control mode		P control, PI control, PD control, PID control		
Control period		10ms ~ 6,553.5ms (Setting unit: 0.1ms)		
Function	Forward/Reverse Mixed control	Switching control direction automatically when exceeding dead band		
	Cascade	Improved control precision by serial connection between master loop and slave loop		
	SV Ramp	Preventing overload caused by excessive SV change by setting variation slope		
	Alarm	Improved control stability with various alarm function such as MV high limit / Low limit, PV high limit/low limit, PV variation width		
	Auto tuning	Auto tuning with improved auto-tuning algorithm		
	Additional function	PWM output, PV Tracking, ΔMV, ΔPV, etc		

※ Economic block type unit (E-type) dose not support built-in PID functions

Pulse catch

When On-condition time of input signal is shorter than 1 scan time (Min. 50㎲), Pulse catch processes the input signal as normal input.

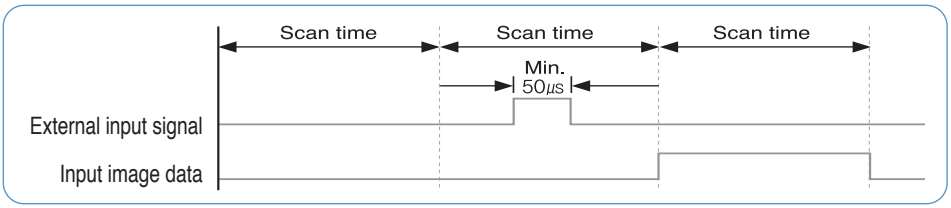

Item	Description			
	Block type unit			Modular type
	H	SU	E	S
Pulse catch	10㎲: 4 points (P00000~P00003) 50㎲: 4 points (P00004~P00007)	10㎲: 2 points (P00000~P00001) 50㎲: 6 points (P00002~P00007)	50㎲: 4 points (P00000~P00003)	50㎲: 8 points (P00000~P00007)

Input filter

Input filter prevents processing of the input signal that is shorter than the filtering time. (Filtering time is set by parameter) In the application site where noise is frequently generated, input filter prevents wrong input caused by noise.

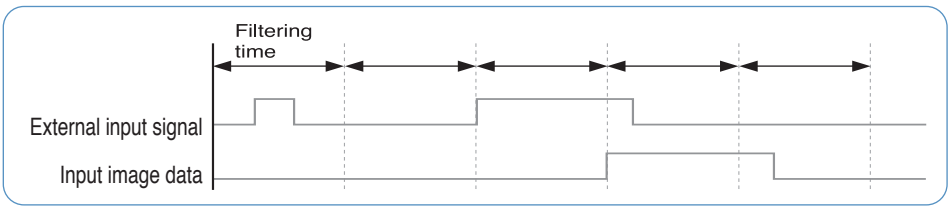

Classification	Description			
	Block type unit			Modular type
	H	SU	E	S
No. of setting points	Every input contact			
Input filtering time setting	Assigning for each module			
Setting range	1 ~ 100㎳ (1, 3, 5, 10, 20, 70, 100)			

I/O specifications | Block type unit

Task

Task function is the processing method of internal/external signal generated periodically or aperiodically. It stops operation of scan program for the moment and then execute the assigned task.

Classification	Description			
	Block type unit			Modular type
	H	SU	E	S
Initial task	1(_INT)			
Cyclic task	8			
I/O task	8	8	4	8
Internal device task	8			
External interrupt	10μs: 4 points (P00000~P00003) 50μs: 4 points (P00004~P00007)	10μs: 2 points (P00000~P00001) 50μs: 6 points (P00002~P00007)	50μs: 4 points (P00000~P00003)	50μs: 8 points (P00000~P00007)

RTC

RTC function is for time management of system and error log. RTC function is executed steadily when power is off or instantaneous power cut status. Current time of RTC is renewed every scan by system operation status information flag.

Classification	Description			
	Block type unit			Modular type
	H	SU	E	S
RTC	Built-in	Option module	Option module	Not available

Specification

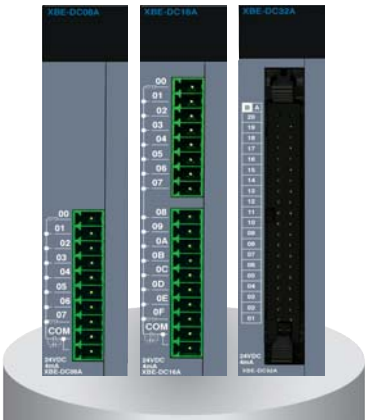

XBE-DC08A
XBE-DC16A
XBE-DC32A

Specification \ Model		XBE-DC08A	XBE-DC16A	XBE-DC32A
Input point		8 points	16 points	32 points
Rated input voltage/current		DC 24V / 4mA		
Operation voltage range		DC 20.4 ~ 28.8V (Ripple rate < 5%)		
Input resistance		5.6kΩ		
Response time	Off → On	1 / 3 / 5 / 10 / 20 / 70 / 100ms (setting by CPU parameter) Initial value: 3ms		
	On → Off			
Insulation pressure		AC 560Vrms / 3 Cycle (altitude 2000m)		
Insulation resistance		10MΩ or more by megger		
COMMON method		8 points / COM	16 points / COM	32 points / COM
Internal current consumption		30mA	40mA	50mA

Wiring
(XBE-DC08A/DC16A)

8-point DC Input	16-point DC Input
XBE-DC08A	XBE-DC16A

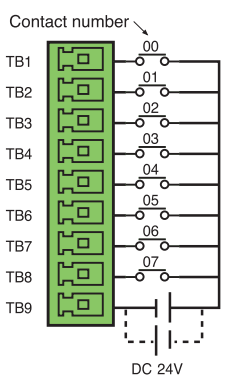

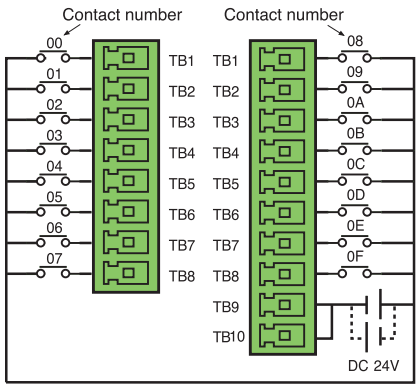

Specification

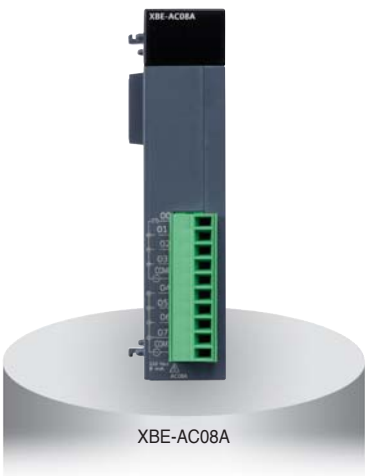

XBE-AC08A

Specification \ Model		XBE-AC08A
Input point		8 point
Insulation method		Photo coupler insulation
Rated input voltage		AC100-120V(+10/-15%) 50/60ß'(±3Hz) (distortion rate < 5%)
Rated input current		Max. 12mA / point
Inrush current		Max. 200mA 1ms (AC132V)
On Voltage/Current		AC80V or higher / 5 mA or higher (50Hz, 60Hz)
Off Voltage/Current		AC30V or lower / 1 mA or lower (50Hz, 60Hz)
Input resistance		About 12kΩ(60Hz), About 15kΩ(50Hz)
Response time	Off → On	20 ms or less (AC100V 50Hz, 60Hz)
	On → Off	25 ms or less (AC100V 50Hz, 60Hz)
Insulation pressure		AC3000Vrms / 3Cycle (altitude 2000m)
Insulation resistance		10MΩ or more by Megohmmeter
Common method		4 point / COM
Weight		70 g

Specification

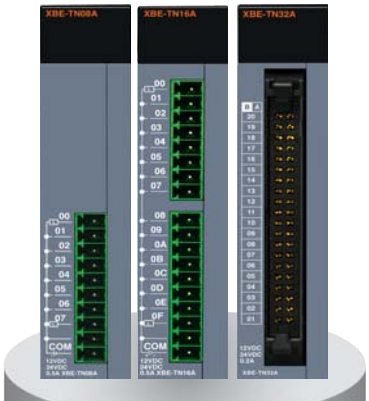

XBE-TN08A
XBE-TN16A
XBE-TN32A

Specification \ Model		XBE-TN08A	XBE-TP08A	XBE-TN16A	XBE-TP16A	XBE-TN32A	XBE-TP32A
Type		Sink	Source	Sink	Source	Sink	Source
Output point		8 point		16 point		32 point	
Rated load voltage		DC 12 / 24V					
Load voltage range		DC 10.2 ~ 26.4 V					
Max. load current		0.2A / 1point		0.2A / 1point, 2A / COM			
Off leakage current		0.1mA or less					
Max. voltage drop (On)		DC 0.4V					
Response time	Off → On	1mA or less					
	On → Off	1mA or less (Rated load, resistive load)					
Common method		8 points / COM		16 points / COM		32 points / COM	
Internal current consumption		40mA		60mA		120mA	
External power supply	Voltage	DC 12 / 24V ± 10% (Ripple voltage ≤ 4 Vp-p)					
	Current	10mA or less (DC 24V connection)				20mA or less (DC 24V connection)	

Item			XBF-AD04C	
Analog range		Item	Voltage	Current
		Range	DC 1 ~ 5V, DC 0 ~ 5V, DC 0 ~ 10V, DC -10 ~ 10V (Input resistance 1MΩ min)	DC 4 ~ 20mA DC 0 ~ 20mA (Input resistance 250MΩ)
Digital Output		Type	16bit binary data (Data : 14bit)	
	Range	Unsigned value	0 ~ 16000	
		Signed value	-8000 ~ 8000	
		Precise value	1000 ~ 5000 (1 ~ 5V), 0 ~ 5000 (0 ~ 5V), 0 ~ 10000 (0 ~ 10V)	4000 ~ 20000 (4 ~ 20mA), 0 ~ 20000 (0 ~ 20mA)
		Percentile value	0 ~ 10000	
Resolution			1/16000	
			0.250mV (1 ~ 5V) 0.3125mV(0 ~ 5V) 0.625mV (0 ~ 10V) 1.250mV(±10V)	1.0μA (4 ~ 20mA) 1.25μA (0 ~ 20mA)
Max. conversion speed			1ms/channel	
Max. absolute input			DC ±15V	DC ±3mA
Analog Input Channels			4 channel/module	
Insulation method			Photo-coupler insulation between input terminal and PLC power (no insulation between channels)	
Connection terminal			15-point terminal block	
Occupied I/O points			Fixed type : 64points	
Current consumption	DC 5V		110mA	
	DC 24V		100mA	

Wiring
(XBE-TN08A/TN16A)

8-point Sink Output — XBE-TN08A

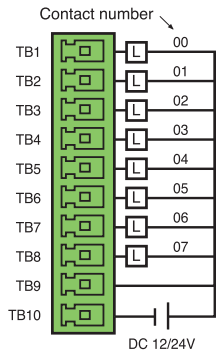

16-point Sink Output — XBE-TN16A

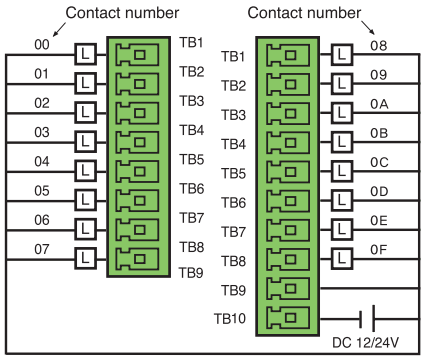

APPLICSTION

Specification

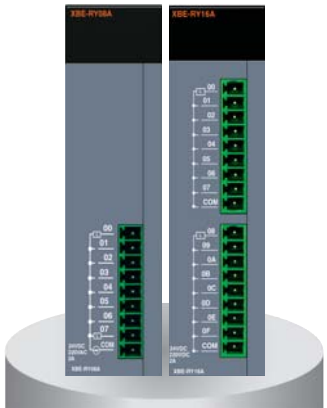

XBE-RY08A
XBE-RY16A

Specification \ Model		XBE-RY08A	XBE-RY16A
Output point		8 points	16 points
Insulation method		Relay insulation	
Rated input voltage/Current		DC 24V 2A (resisitive load)/AC 220V 2A (COSΨ = 1), 5A /COM	
Min. load voltage/Current		DC 5V 1mA	
Max. load voltage		AC 250V, DC 125V	
Off leakage current		0.1mA (AC 220V, 60Hz)	
Max. on/Off frequency		3,600 times / hr	
Surge absorber		None	
Service life	Mechanical	20million times or more	
	Electrical	Rated load voltage/Current 100,000 times or more	
		AC 200V/1.5A, AC 240V/1A (COSΨ = 0.7) 100,000 times or more	
		AC 200V/1A, AC 240V/0.5 (COSΨ = 0.35) 100,000 tiems or more	
		DC 24V/1A, DC 100V/0.1A (L / R = 7ms) 100,000 times or more	
Response time	Off → On	10ms or less	
	On → Off	12ms or less	
COMMON method		8 points / 1COM	
Internal current consumption		230mA	420mA
Operation indicator		Output On, LED On	
External connection method		9-pin terminal block connector	9-pin terminal block connector × 2

Item			XBF-DV04C	XBF-DC04C
Analog range		Item	Voltage	Current
		Range	DC 1 ~ 5V, DC 0 ~ 5V, DC 0 ~ 10V, DC -10 ~ 10V (Input resistance 1kΩ or more)	DC 4 ~ 20mA DC 0 ~ 20mA (Input resistance 600MΩ or less)
Digital Output		Type	16bit binary data (Data : 14bit)	
	Range	Unsigned value	0 ~ 16000	
		Signed value	-8000 ~ 8000	
		Precise value	1000 ~ 5000 (1 ~ 5V), 0 ~ 5000 (0 ~ 5V), 0 ~ 10000 (0 ~ 10V)	4000 ~ 20000 (4 ~ 20mA), 0 ~ 20000 (0 ~ 20mA)
		Percentile value	0 ~ 10000	
Resolution			1/16000	
			0.250mV (1 ~ 5V) 0.3125mV (0 ~ 5V) 0.625m V(0 ~ 10V) 1.250mV (±10V)	1.0μA (4 ~ 20mA) 1.25μA (0 ~ 20mA)
Max. conversion speed			1ms/channel	
Analog Input Channels			4 channel/module	
Insulation method			Photo-coupler insulation between output terminal and PLC power (no insulation between channels)	
Connection terminal			11-point terminal block	
Occupied I/O points			Fixed type : 64points	
Current consumption	DC 5V		75mA	
	DC 24V		170mA	

DC Input specification

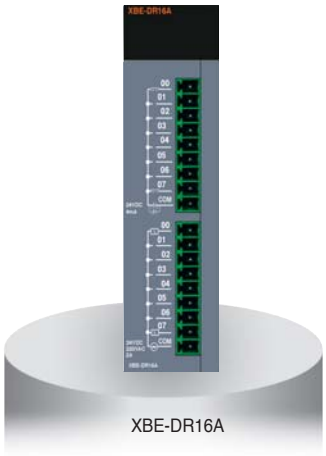
XBE-DR16A

Specification \ Model		DC Input (XBE-DR16A)
Input point		8 points
Insulation method		Photocoupler
Rated input voltage		DC 24V
Rated input current		4mA
Operation voltage range		DC 20.4 ~ 28.8V (Ripple rate < 5%)
On voltage/On current		DC 19V or more/3mA or more
Off voltage/Off current		DC 6V or less/1mA or less
Input resistance		5.6kΩ
Response time	Off → On	1/3/5/10/20/70/100ms (setting by CPU parameter) init value: 3ms
	On → Off	
COMMON method		8 points/COM
Weight		81g

Relay output specification

Specification \ Model		Relay Output (XBE-DR16A)
Output point		8 points
Insulation method		Relay insulation
Rated input voltage/Current		DC 24V 2A (resisitive load)/AC 220V 2A (COSΨ = 1), 5A /COM
Min. load voltage/Current		DC 5V 1mA
Max. load volfage		AC 250V, DC 125V
Off leakage current		0.1mA (AC 220V, 60Hz)
Max. on/Off frequency		3,600 times/hr
Surge absorber		None
Service life	Mechanlcal	20million times or more
	Electrical	Rated load voltage/Current 100,000 times or more
		AC 200V/1.5A, AC 240V/1A (COSΨ = 0.7) 100,000 times or more
		AC 200V/1A, AC 240V/0.5 (COSΨ = 0.35) 100,000 tiems or more
		DC 24V/1A, DC 100V/0.1A (L / R = 7ms) 100,000 times or more
Response time	Off → On	10ms or less
	On → Off	12ms or less
COMMON method		8 points/1COM
Internal current consumption		250mA
Operation indicator		Output On, LED On
External connection method		9-pin terminal block connector

Wiring
(XBE-DR16A)

8-point DC Input

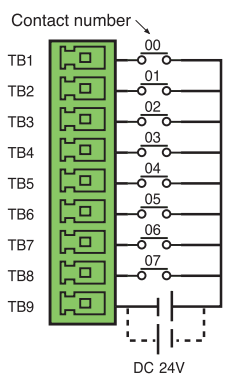

8-point Relay Output

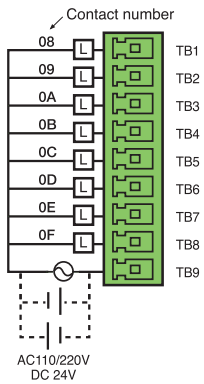

APPLICSTION

DC Input specification

XBE-DN32A

Specification \ Model		DC input module XBE-DN32A
Input point		16 point
Insulation method		Photo coupler insulation
Rated input voltage		DC24V
Rated input current		About 4mA
Input Derating		DC20.4~28.8V (ripple rate < 5%)
Operation voltage range		Refer to Derating diagram
On voltage / On current		DC 19V or higher / 3 mA or higher
Off voltage / Off current		DC 6V or less / 1mA or less
Input resistance		About 5.6㏀
Response time	Off → On	1/3/5/10/20/70/100㎳ (set by CPU parameter) Default:3㎳
	On → Off	
Insulation pressure		AC 560Vrms / 3 Cycle (altitude 2000m)
Insulation resistance		10㏁ or more by Megohmmeter
Common method		16 point / COM
Proper cable size		0.3㎟
Current consumption		60㎃ (When all inputs and outputs are on)
Operation indicator		Input On, LED On
External connection method		40 pin connector
Weight		60g

Transistor specification

Specification \ Model		Main unit XBE-DN32A
Output point		16 point
Insulation method		Photo coupler insulation
Rated voltage		DC12/24V
Rated current		About 4mA
Operation voltage range		DC10.2~26.4V
Max. load voltage		0.2A / 1 point, 2A / 1COM
Off leakage current		0.1mA or less
Max. load voltage		0.7A / 10ms or less
Max. voltage drop (On)		DC 0.4V or less
Surge absorber		TVS Diode
Response time	Off → On	1㎳ or less
	On → Off	1㎳ or less (Rated load, resistive load)
Common method		32 point / COM
Proper cable size		0.3㎟
Current consumption		60mA (when all point On)
External power	Voltage	DC12/24V 10% (ripple voltage 4 Vp-p or less)
	Current	20mA or less (connecting DC24V)
Operation indicator		LED On when output On
External connection method		40 pin terminal block connector
Weight		60g

Wiring
(XBE-DN32A)

16-points DC Input

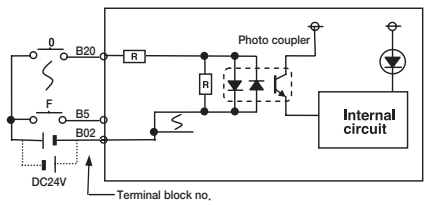

16-points Transistor Output

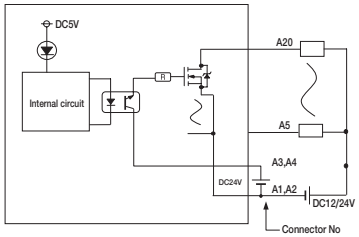

Specification

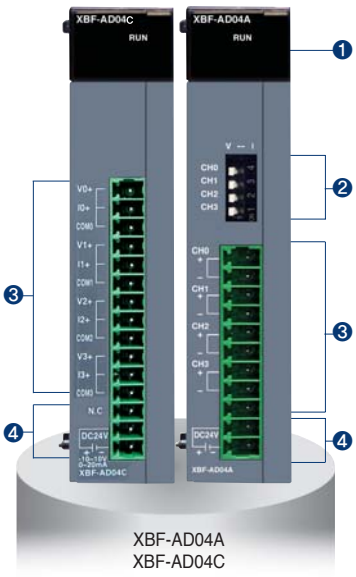

XBF-AD04A
XBF-AD04C

Item			XBF-AD04A		XBF-AD04C		XBF-AD08A	
Analog range	Item		Voltage	Current	Voltage	Current	Voltage	Current
	Range		DC 0~10V (input resistance : 1MΩ min.)	DC 4~20mA, DC 0~20mA (input resistance: 250Ω)	DC 1 ~ 5V DC 0 ~ 5V DC 0 ~ 10V DC -10 ~ 10V (Input resistance : 1MΩ min)	DC 4 ~ 20mA DC 0 ~ 20mA (Input resistance : 250MΩ)	DC 1~5V DC 0~5V DC 0~10V (Input resistance : 250MΩ)	DC 4~20mA, DC 0~20mA (input resistance: 250Ω)
Digital output	Type		12bit binary data		16bit binary data (Data : 14bit)		12bit binary data	
	Range	Unsigned value	0~4000		0 ~ 16000		0~4000	
		Signed value	-2000~2000		-8000~8000		-2000~2000	
		Precise value	0~1000	4000~2000 / 0~2000	100~5000 (1~5V) 0~5000 (0~5V) 0~10000 (0~5V) -10000~10000 (±10V)	4000~20000 (4~20mA) 0~20000 (0~20mA)	100~500 (DC 1~5V) 0~500 (DC 0~5V) 0~1000 (DC 0~10V)	4000~2000 (DC 4~20mA) 0~2000 (DC 0~20mA)
		Percentile value	0~1000		0~10000		0~1000	
Resolution			2.5mV (1/4000)	5μA (1/4000)	1/16000 0.250mV (1 ~ 5V) 0.3125mV (0 ~ 5V) 0.625mV (0 ~ 10V) 1.250mV (±10V)	1.0μA (4 ~ 20mA) 1.25μA (0 ~ 20mA)	1.25mV (DC 1~5V, 0~5v) 2.5mV (DC 0~10V)	5μA (DC 4~20mA, 0~20mA)
Max. conversion speed			1.5ms / channel		1ms / channel		1.5ms / channel	
Max. absolute input			±15V	± 25mA	DC±15V	DC±3mA	±15V	± 25mA
Analog Input channels			4 channel/module		4 channel/module		8 channel/module	
Insulation method			Photocoupler insulation between I/O terminal and power supply		Photo-coupler insulation between input terminal and PLC power (No insulation between channels)		Photocoupler insulation between I/O terminal and power supply	
Connection terminal			11-point terminal block		15-point terminal block		11-point terminal block	
Occupied I/O points			Fixed type : 64 points					
Current consumption		DC 5V	120mA		110mA		105mA	
		DC 24V	62mA		100mA		85mA	

Names and Functions

No.	Name	Descriptions
❶	RUN LED	▶ Indicates condition of module • LED On: Normal condition • LED On and Off: Flickering • LED Off: Power Off or module malfunction
❷	Input selection S/W	▶ Voltage/Current selection switch • V: Voltage input selection • I: Current input selection
❸	Terminal block	▶ External device connection
❹	External power supply terminal	▶ External DC 24V input

Wiring

Wiring with 2-wire sensor

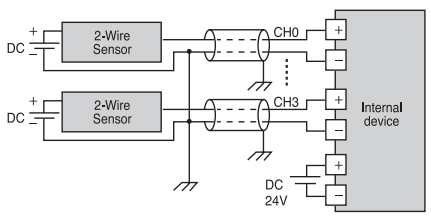

Wiring with 4-wire sensor

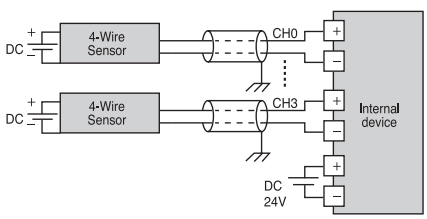

※Use 22AWG, 2 conductor, twist shielded cable when wiring between analog module and external device.

APPLICSTION

Specification

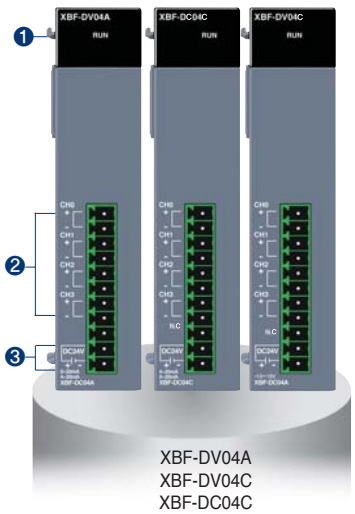

Item		XBF-DV04A	XBF-DV04C	XBF-DC04C	XBF-DC04A
Analog range		DC 0 ~ 10 V (Load resistance ≥ 2kΩ)	DC 1 ~ 5V DC 0 ~ 5V DC 0 ~ 10V DC -10 ~ 10V (Input resistance : 1kΩ or more)	DC 4 ~ 20mA DC 0 ~ 20mA (Input resistance : 600MΩ or less)	4 ~ 20mA / 0 ~ 20mA (Load resistance ≤510Ω)
Analog range Selection		–	–		XG 5000 I/O parameter
Digital data	Output range	0 ~ 10 V	–		4 ~ 20mA/0 ~ 20mA
	Unsigned value	0 ~ 4000	0 ~16000		0 ~ 4000
	Signed value	– 2000 ~ 2000	– 8000 ~ 8000		– 2000 ~ 2000
	Precise value	0 ~ 1000	1000~5000 (1~5V) 0~5000 (0~5V) 0~10000 (0~10V) -1000~10000 (±10V)	4000~20000 (4~20mA) 0~20000 (0~20mA)	400 ~ 2000/0 ~ 2000
	Percentile value	0~1000	0~10000		0~1000
	Data format	Data format of digital input is set by user program or I/O parameter (Setting for each channel is available.)			
Resolution		Resolution (1/4000)	1/1600		Resolution (1/4000)
		2.5mV	0.250m (1~5V) 0.3125m (0~5V) 0.625m (0~10V) 1.250m (±10V)	1.0μA (4~20mA) 1.25μA (0~20mA)	5μA
Max. conversion speed		1ms/channel	1ms/channel		1ms/channel
Max. absolute output		±15V	–		±25mA
Accuracy		±0.5% or less	–		±0.5% or less
Analog output channels		4 channel/module	4 channel/module		4 channel/module
Insulation method		Photocoupler insulation between I/O terminal and power supply	Photo-coupler insulation between output terminal and PLC power (no insulation between channels)		Photocoupler insulation between I/O terminal and power supply
Connection terminal		11-point terminal block			
Occupied I/O points		Fixed type: 64 points			
Current consumption	DC 5V	110mA	75mA		110mA
	DC 24V	70mA	170mA		120mA

Names and Functions

No.	Name	Descriptions
❶	RUN LED	▶ Indicates condition of module • LED On: Normal condition • LED On and Off: Flickering • LED Off: Power Off or module malfunction
❷	Terminal block	▶ External device connection
❸	External power supply terminal	▶ External DC 24V input

Wiring

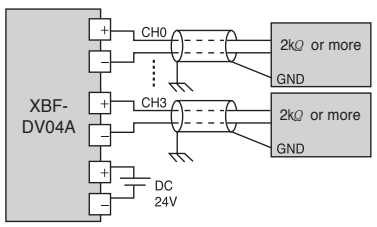

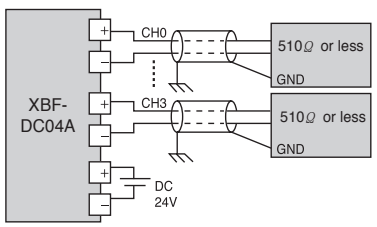

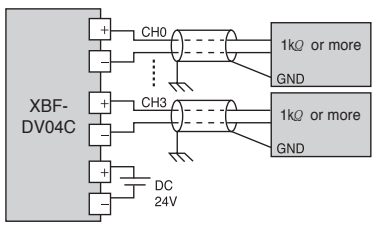

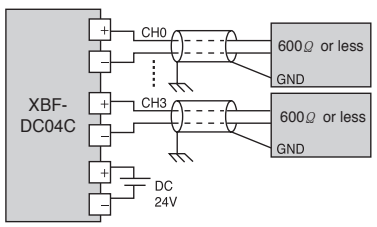

Specification

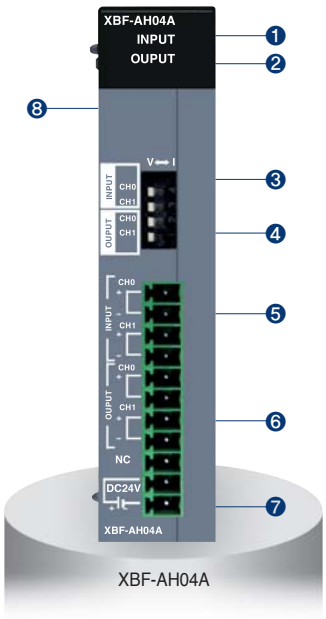

XBF-AH04A

Item		XBF-AH04A	
		Input	Output
Analog channel		2 channels	2 channels
Analog range		DC 1 ~ 5V, DC 0 ~ 5V, DC 0 ~ 10V (Input resistance: 1 MΩ min.) DC 4 ~ 20mA, DC 0 ~ 20mA (Input resistance 250Ω)	DC 1 ~ 5V, DC 0 ~ 5V, DC 0 ~ 10V (Load resistance ≥ 2kΩ) DC 4 ~ 20mA, DC 0 ~ 20mA (Load resistance ≤510Ω)
Analog range selection		XG 5000 I/O parameter and External switch	
Digital data	Unsigned value	0 ~ 4000	
	Signed value	-2000 ~ 2000	
	Precise value	100 ~ 500 (DC 1 ~ 5V), 0 ~ 500 (DC 0 ~ 5V), 0 ~ 1000 (DC 0 ~ 10V) 400 ~ 2000 (DC 4 ~ 20mA), 0 ~ 2000 (DC 0 ~ 20mA)	
	Percentile value	0 ~ 1000	
Resolution (1/4000)		1.25mV (DC 1~5V, 0~5V), 2.5mV (DC 0~10V) 5㎂ (DC 4~20mA, 0~20mA)	
Max. conversion speed		±15V, 25mA	
Max. absolute output		1ms / Channel	
Accuracy		±0.5% or less	
Insulation method		Photocoupler insulation between I/O terminal and power supply	
Connection terminal		11-point terminal block	
Occupied I/O points		Fixed type: 64 points	
Current consumption	DC 5V	120mA	
	DC 24V	130mA	

Names and Functions

No.	Name	Descriptions
1	INPUT LED	▶ Indicates input condition of module • LED On: Normal condition • LED On and Off: Flickering • LED Off: Power Off or module malfunction
2	OUTPUT LED	▶ Indicates output condition of module • LED On: Normal condition • LED On and Off: Flickering • LED Off: Power Off or module malfunction
3	Input selection S/W	▶ Voltage / Current selection switch for input
4	Output selection S/W	▶ Voltage / Current selection switch for output
5	Terminal block	▶ Terminal for external input device
6		▶ Terminal for external output device
7	External power supply terminal	▶ Terminal for external DC 24V input
8	Expansion connector	▶ Terminal for expansion

Wiring

Wiring with 2-wire sensor (for analog input)

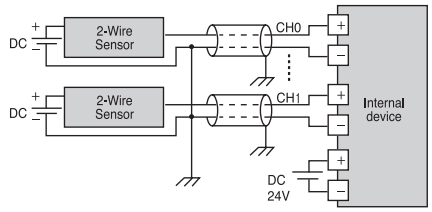

Wiring with 4-wire sensor (for analog input)

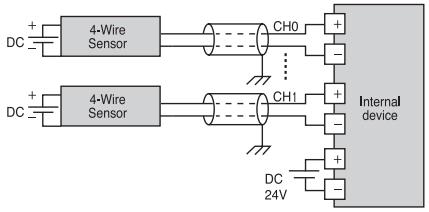

※Use 22AWG, 2 conductor, twist shielded cable when wiring between analog module and external device.

APPLICSTION

Specification

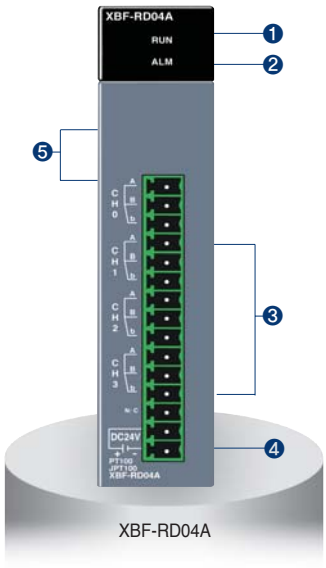

Item		XBF-RD04A
Number of channels		4
Sensor type	PT 100	JIS C1804-1997
	JPT 100	JIS C1604-1981, KS C1603-1991
Temperature range	PT 100	– 200 ~ 600℃
	JPT 100	– 200 ~ 600℃
Digital output	PT 100	– 2000 ~ 6000
	JPT 100	– 2000 ~ 6000
	Scaling	0 ~ 4000
Accuracy	25℃	±0.3% or less
	0 ~ 55℃	±0.5% or less
Conversion speed		40ms / Ch
Wiring method		3-wire
Current consumption	DC 5V	100mA
	DC 24V	100mA

Names and Functions

No.	Name	Descriptions
1	RUN LED	▶ Displays the hardware operation status (Fatal fault) • On: Normal status • Flickering: Error (0.2s flickering) • Off: hardware error or power off
2	ALM LED	▶ Displays the status of the channels (Light fault) • Flickering: Line disconnection (1s flickering) • Off: Normal status
3	Terminal block	▶ 3-wire RTD sensors can be connected
4	External power terminal	▶ Supplies the external DC 24V
5	Expansion connector	▶ Connects the module with an expansion module

Wiring

2-wire	3-wire	4-wire
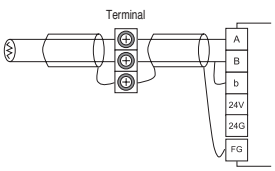	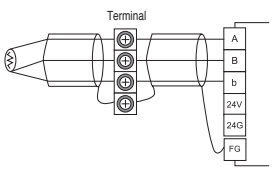	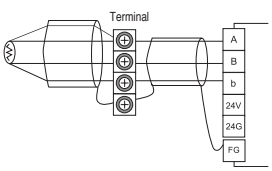

Specification

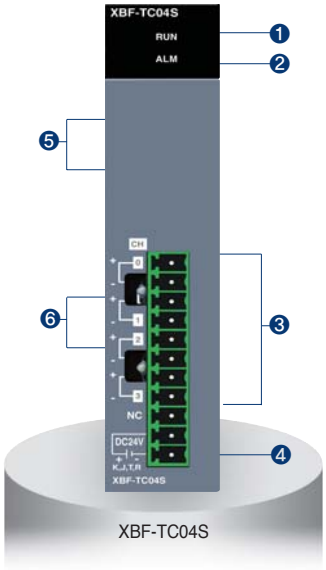

XBF-TC04S

Item		XBF-TC04S
Number of channels		4
Input sensor type		Thermocouple K/J/T/R JIS C1602–1995
Temperature input range	K	– 200.0℃ ~ 1300.0℃ (-328.0℉ ~ 2372.0℉)
	J	– 200.0℃ ~ 1200.0℃ (-328.0℉ ~ 2192.0℉)
	T	– 200.0℃ ~ 400.0℃ (-328.0℉ ~ 752.0℉)
	R	0.0℃ ~ 1700.0℃ (32.0℉ ~ 3092.0℉)
Digital output	Temperature display unit	Display down to one decimal place K, J, T: 0.1℃ R: 0.5℃
	Scaling display (Defined by user)	Unsigned scaling (0 ~ 65535)
		Signed scaling (-32768 ~ 32767)
Accuracy	Normal temperature (25℃)	±0.2%
	Temperature coneffcient (0 ~ 55℃)	±100 ppm / ℃
Max. conversion speed		50ms / Channel
Warming-up time		15 minutes or more
Terminal		11-point terminal
I/O points occupied		64 points
Current consumption	DC 5V	100mA
	DC 24V	100mA

Names and Functions

No.	Name	Descriptions
❶	RUN LED	▶ Displays the hardware operation status (Fatal fault) • On: Normal status • Flickering: Error (0.2s flickering) • Off: hardware error or power off
❷	ALM LED	▶ Displays the status of the channels (Light fault) • Flickering: Line disconnection (1s flickering) • Off: Normal status
❸	Terminal block	▶ Terminals to connect the thermo-couple sensor
❹	External power terminal	▶ Terminals to supply the external DC 24V
❻	RJC	▶ Device for Reference Junction Compensation

Wiring

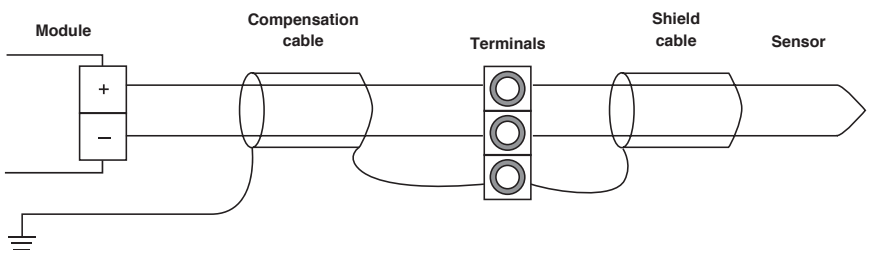

APPLICSTION

Specification

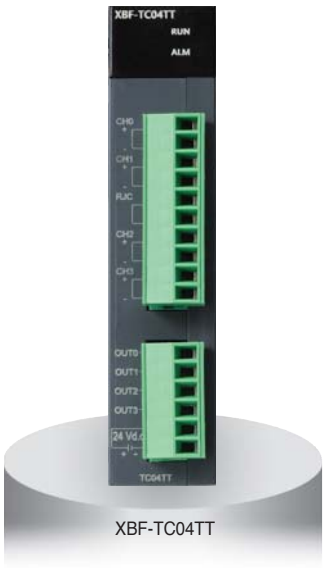

XBF-TC04TT

Item			XBF-TC04TT	
Control loop			4 loop	
Thermocouple type and input range	K		-200.0 ~ 1300.0 ℃	
			0.0 ~ 500.0 ℃	
	J		-200.0 ~ 1200.0 ℃	
			0.0 ~ 500.0 ℃	
	T		-200.0 ~ 800 ℃	
Precision	Standard precision		±0.2% or less (25 ℃, normal temperature, except -200~-100 ℃ for the T type)	
	Temperature coefficient		±100ppm/℃(0.01%/℃)	
Cold junction compensation	Compensation method		Automatic compensation by RJC sensing	
	Compensation degree		±2.0 ℃	
Sampling period			500ms/ 4 loop	
Control method			PID CONTROL, ON/OFF CONTROL	
Control parameter	Target value (SV)		Setting within range according to input type (temperature unit setting)	
	Proportional gain		0: ON/OFF CONTROL, REAL	
	Integral time		0: Except integral control, REAL	
	Derivative time		0: Except derivative control, REAL	
Transistor output	Output point		4	
	Rated load voltage		DC 24 V	
	Max. load current		0.1 A / Output point	
	Max. voltage drop when on		DC 1.2 V or less	
	Leakage current when off		0.1 mA or less	
	Response time	On => Off	1 ms or less	
		Off => On	1 ms or less	
	Control output cycle		0.5 ~ 120.0 sec (Setting unit: 0.5 sec.)	
	Time proportional resolution		Larger one of either 10 ms or 0.05% of the full-scale	
Insulation	Between input channels		Photo relay	Withstanding voltage: 400V AC, 50/60Hz 1min, leakage current 10mA or less
	Input terminal-PLC power		Photo relay	Insulation resistor: 500V DC, 10 MΩ or above
	Output terminal-PLC power		Non-insulation	
	Between output channels			
Averaging function	Weighted average		0 ~ 99% (setting range)	
	Moving average		0 ~ 99 times (setting range)	
Warm-up			20 minutes or above	
Maximum rate of ambient temperature changing			0.5 ℃/min (30 ℃/hour) or less	
Access terminal			16 point terminal (10 point terminal 1ea, 6 point terminal 1ea)	
IO occupation point			Fixed: 64 points	
Max. no. of installation			XBM-DxxxS type: 7ea, XB(E)C-DxxxH type: 10ea, XB(E)C-DxxxSU: 7ea, XB(E)C-DxxxU: 10ea	
Power supply			5 V, DC 24 V	
Current consumed			Internal DC 5 V : 120 mA, External DC 24 V : 100 mA	

Specification

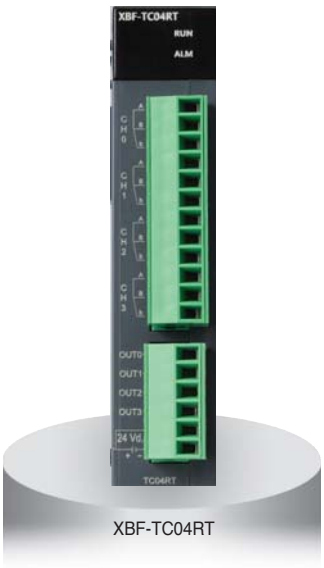

XBF-TC04RT

Item			XBF-TC04RT	
Control loop			4 loop	
RTD type and input range	Pt100		-200.0 ~ 850.0 ℃	
	JPt100		-200.0 ~ 600.0 ℃	
Precision	Standard precision		±0.2% or less (25 ℃, normal temperature)	
	Temperature coefficient		±100ppm/ ℃(0.01%/ ℃)	
Sampling period			500ms/ 4 loop	
Control method			PID CONTROL, ON/OFF CONTROL	
Control parameter	Target value (SV)		Setting within range according to input type (temperature unit setting)	
	Proportional gain		0: ON/OFF CONTROL, REAL	
	Integral time		0: Except integral control, REAL	
	Derivative time		0: Except derivative control, REAL	
Transistor output	Output point		4	
	Rated load voltage		DC 24 V	
	Max. load current		0.1 A/Output point	
	Max. voltage drop when on		DC 1.2 V or less	
	Leakage current when off		0.1 mA or less	
	Response time	On => Off	1 ms or less	
		Off => On	1 ms or less	
	Control output cycle		0.5 ~ 120.0 sec (Setting unit: 0.5 sec.)	
	Time proportional resolution		Larger one of either 10 ms or 0.05% of the full-scale	
Insulation	Between input channels		Photo relay	Withstanding voltage: 1500V AC, 50/60Hz 1min, leakage current 10mA or less
	Input terminal- PLC power		Photo relay	Insulation resistor: 500V DC, 10 MΩ or above
	Output terminal- PLC power Between output channels		Non-insulation	
Averaging function	Weighted average		0 ~ 99% (setting range)	
	Moving average		0 ~ 99 times (setting range)	
Access terminal			18 point terminal (12 point terminal 1ea, 6 point terminal 1ea)	
IO occupation point			Fixed: 64 points	
Max. no. of installation			XBM-DxxxS type: 7ea, XB(E)C-DxxxH type: 10ea, XB(E)C-DxxxSU: 7ea, XB(E)C-DxxxU: 10ea	
Power supply			5 V, DC 24 V	
Current consumed			Internal DC 5 V : 120 mA, External DC 24 V : 100 mA	

Specification

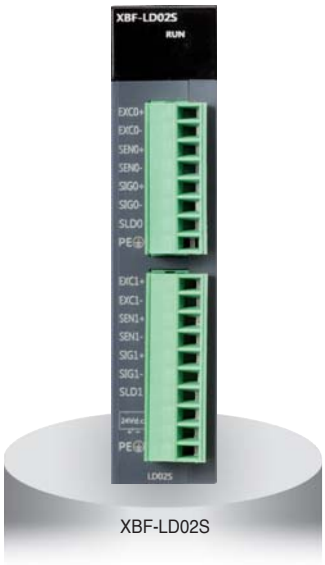

XBF-LD02S

Item	Specifications			
Input Channel	2 Channel (Insulation between Channels)			
Load Cell Input Voltage	5VDC ±5%, (8 per 350Ω load cell channel)			
Load Cell Type	Four-wire or Six-wire			
Resolution	1/40000			
Analog Input Range	0.0~6.0㎷			
Load Cell Output Sensitivity	0.125㎶(when the rated output of the load cell is 0.0 ~ 1.0㎷/ V)			
Input Accuracy	±0.01% or below (nonlinear accuracy, 25℃) Zero Drift: ±0.25℃), Gain Drift: ±15ppm//℃			
Sampling Cycle (per channel)	5㎳			
Insulation	**Classification**	**Insulation Method**	**Insulation Voltage Resistance (Internal Test Specifications)**	**Insulation Resistance**
	Input terminal-Internal circuits	Isolator	AC 550 V 50/60 Hz 1 minute, Leakage 10 mA or below	DC500 V, 10 MΩ or above
	Between input channels	Transformer		
	External power-Internal circuits	DC/DC Converter		
Warm-up time	30 minutes or above			
Input Connector	8 pins Connector(CH0)/10 pins Connector(CH1)			
IO Occupation Points:	Fixed type:64 points			
Max. no. of installation	XBM-DxxxS type: 7ea, XB(E)C-DxxxH type: 10ea, XB(E)C-DxxxSU: 7ea, XB(E)C-DxxxU: 10ea,			
Power Supply	5V, DC 24			
Consumption	Internal DC5V : 110㎃, External DC24V : 280㎃			

Specification

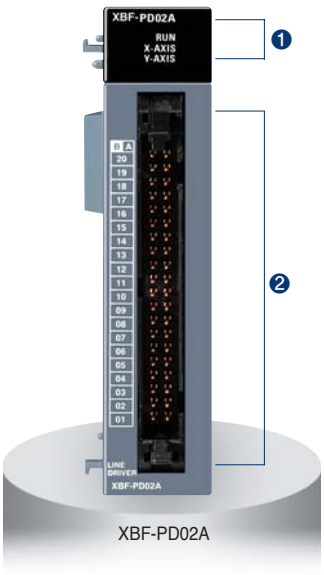

Item		XBF-PDO2A
N0. of control axis		2 axis
Pulse output type		Line drive
Max. pulse output		2Mpps
Max. connection length		10m
Control mode		Position control, Speed control, Speed /Position switching control, Position / Speed switching control
Interpolation		Linear interpolation, Circula interpolation
Positioning data		150 operation data for each axis
Configuration tool		Built-in function parameter of XG5000
Back-up		Flash memory
Positioning	Positioning method	Absolute/Incremental method
	Unit	pulse
	Positioning range	– 2,147,483,648 ~ 2,147,483,648
	Speed range	1~2,000,000 (pulse/sec)
	Acceleration/Deceleration type	Trapezoidal acceleration/deceleration
	Acceleration/Deceleration time	0~65,535ms, Asymmetric acceleration/deceleration
Max. encoder input		200kpps (Line drive)
Error/Operation		LED
I/O occupied points		Fixed type: 64 points
Connection terminal		40pin connector
Current consumption (mA)		500

Names and Functions

No.	Name	Descriptions
1	RUN LED	1. RUN ▶ Displays the hardware operation status • On: Normal status • Off: Abnormal status 2. X_AXIS, Y_AXIS • On: Operation • Flickering: Error
2	Terminal block	▶ Terminals to connect the MPG, external device and drive device.

Terminal

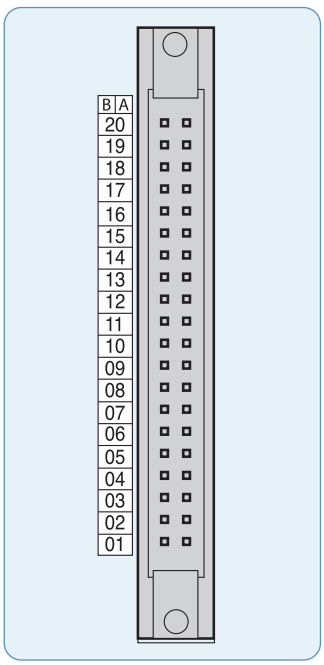

Pin number		Signal name	
X axis	Y axis		
B20		MPG A+	Manual Pulse Generator/Encoder A+ input
A20		MPG A–	Manual Pulse Generator/Encoder A– input
B19		MPG B+	Manual Pulse Generator/Encoder B+ input
A19		MPG B–	Manual Pulse Generator/Encoder B– input
A18	B18	FP+	Forward pulse+
A17	B17	FP–	Forward pulse–
A16	B16	RP+	Reverse pulse+
A15	B15	RP–	Reverse pulse–
A14	B14	OV+	High limit
A13	B13	OV–	Low limit
A12	B12	DOG	Near point
A11	B11	NC	–
A10	B10		
A09	B09	COM	Common
A08	B08	NC	–
A07	B07	INP	Inposition signal
A06	B06	INP COM	Inposition signal common
A05	B05	CLR	Deviation counter clear signal
A04	B04	CLR COM	Deviation counter clear signal common
A03	B03	HOME +5V	Zero signal(DC 5V)
A02	B02	HOME COM	Zero signal Common
A01	B01	NC	–

APPLICSTION

Specification

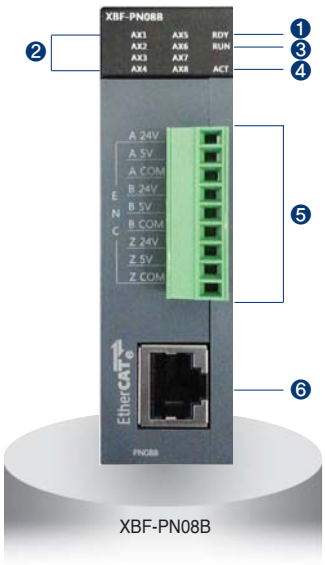

XBF-PN08B

Item			XBF-PN08B		
No. of control axis			8		
Interpolation function			2~8 axes linear interpolation, 2 axes circular interpolation, 3 axes helical interpolation		
Control method			Position control, Speed control, Speed/Position control, Position/Speed control, Position/Torque Control, Feed control		
Control unit			Pulse, mm, inch, degree		
Positioning data			Each axis can have up to 400 operation data .(Operation step number : 1~400) Available to set with XG-PM or program		
XG-PM	Connection		RS-232C port of CPU module or USB		
	Setting data		Common, Basic, Extended, Servo parameter, Operation data, Cam data, Command information		
	Monitor		Operation information, Trace, Input terminal information, Error information		
Back-up			Save the parameter, operation data in MRAM ROM (No need of Battery)		
Positioning	Positioning method		Absolute method/Incremental method		
	Position address range		Absolute	Incremental	Speed/Position, Position/Speed Switching control
		mm	-214748364.8~214748364.7(㎛)	-214748364.8~214748364.7(㎛)	-214748364.8~214748364.7(㎛)
		Inch	-21474.83648~21474.83647	-21474.83648~21474.83647	-21474.83648~21474.83647
		degree	-21474.83648~21474.83647	-21474.83648~21474.83647	-21474.83648~21474.83647
		pulse	-2147483648~2147483647	-2147483648~2147483647	-2147483648~2147483647
	Speed range	mm	0.01~20000000.00(ßÆ/min)		
		Inch	0.001~2000000.000(Inch/min)		
		degree	0.001~2000000.000(degree/min)		
		pulse	1~20,000,000(pulse/SEC)		
		rpm	0.1~100000.0(RPM)		
	Acc./Dec. process		Trapezoid type, S-type		
	Acc./Dec. time		1~2,147,483,647ms selection is available from 4 types of acceleration/deceleration pattern		
Manual Operation			Jog Operation, MPG Operation, Inching Operation		
Homing method			Refer to the method supported by the servo driver		
Speed change function			Speed change (Percent/Absolute value)		
Torque unit			Rated torque % designation		
Absolute position system			Available (when using absolute encoder type servo driver)		
External Encoder input	Channel		1 channel		
	Max. Input		200 kpps		
	Input form		Line drive input (RS-422A IEC specification), open collector output type encoder		
	Input type		CW/CCW, PULSE/DIR, Phase A/B		
	Connection connector		9-point connector		
Communication Period			1ms		
Max. transmission distance			100m		
Communication cable			Over CAT.5 STP (Shielded Twisted-pair) cable		
Error indication			Indicated by LED		
Communication status indication			Indicated by LED		
Consumable current			510mA		
Weight			115g		

Names and Functions

No.	Name	Descriptions
❶	Module ready signal	On: Positioning module normal status Off: Power OFF or CPU module reset status Flicker: Positioning module abnormal status
❷	Operation indicator LED (AX1 ~ AX8)	On: applicable axis is running Off: applicable axis is stop status Flicker: applicable axis is error status
❸	Communication status indicator LED	On: communication with servo driver is connected Off: communication with servo driver is disconnected Flicker: Error occurs during communicating with servo driver
❹	TRX status LED	On: Wiring with servo driver is done Off: Wiring with servo driver is not done Flicker: communicating with servo driver
❺	Connector for encoder wiring	Connector to connect with encoder
❻	RJ-45 connector	RJ-45 connector to connect with servo driver

Terminal

Pin arrangement	Pin No.	Signal name		Signal direction
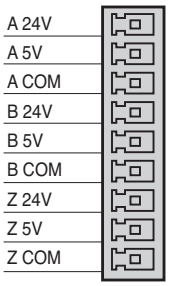	1	A 24V	Encoder A 24V input	Input
	2	A 5V	Encoder A 5V input	
	3	A COM	Encoder A input COM	
	4	B 24V	Encoder B 24V input	
	5	B 5V	Encoder B 5V input	
	6	B COM	Encoder B input COM	
	7	Z 24V	Encoder Z 24V input	
	8	Z 5V	Encoder Z 5V input	
	9	Z COM	Encoder Z input COM	

Specification

XBF-HO02A
XBF-HD02A

Item		Specification	
		XBF-HO02A	XGF-HD02A
Count input signal	Signal	A-phase, B-phase	
	Input type	Voltage input (Open Collector)	Differential input (Line Drive):
	Signal level	DC 5/12/24V	RS-422A Line Drive/HTL LEVEL Line Drive
Maximum coefficient speed		200kpps	500kpps (HTL input : 250kpps)
Number of channels		2 Channels	
Coefficient range		Signed 32-bit (-2,147,483,648 ~ 2,147,483,647)	
Count mode		Linear Count (When 32-bit range exceeded, Carry /Borrow occurs, The count value stopped)	
		Ring Count (Repeated count within setting range)	
Input pulse mode		1-phase input	
		2-phase input	
		CW/CCW input	
Up/down setting	1-phase input	Increasing/Decreasing operation setting by B-phase input	
		Increasing/Decreasing operation setting by program	
	2-phase input	Automatic setting by difference in phase	
	CW/CCW	A-phase input: Increasing operation	
		B-phase input: Decreasing operation	
Multiplication function	1-phase input	1/2 multiplication	
	2-phase input	1/2/4 multiplication	
	CW/CCW	1- multiplication	
Control input	Signal	Preset instruction input, Auxiliary mode instruction input	
	Signal level	DC 5V/12V/24V (by terminal selection) input type	
	Signal type	Voltage	
External output	Output points	2-point/channel (for each channel): Terminal output available	
	Type	Select single-compared (>, >=, =, =<, <) or section compared output (Included or excluded)	
	Output type	Open collector output (Sink)	
Operation status display	Input signal	A-phase input, B-phase input, Preset instruction input, Auxiliary mode instruction input	
	Output signal	External output 0, External output 1	
	Busy status	Module Ready	
Count enable		To be set through program (Count available only in enable status)	
Preset function		To be set through terminal or program	
Auxiliary mode function		Count clear, Count latch, Section count(time setting value: 0~60000㎳), Measurement of input frequency(for respective input phase), Measurement of counts per hour(time setting value: 0~60000㎳) Count prohibited function	
Terminal		40 pin connector	
I/O occupied points		Fixed point: 64	
Current consumption(mA)		200	260
Weight		90g	

Names and Functions

No.	Name	Descriptions
1	Run LED (ØA, ØB, P, G, 00, 01)	▶ On: Relevant channel pulse inputting, Preset/Auxiliary function signal inputting, Outputting ▶ Off: No input of relevant channel pulse, No input of preset/ Auxiliary function signal, No output of comparison
	Ready signal (RDY)	▶ On: HSC module normal ▶ Off: Power off or CPU module reset, HSC module error • Flicker: HSC module error
2	External wiring connector	Connector to conect with external I/O

Terminal (XBF-H002A)

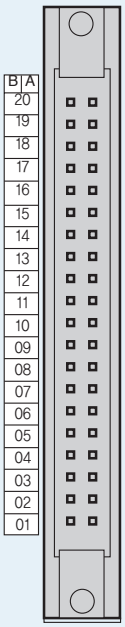

Pin arrangement		Signal name	
B ch1	A ch0		
20	20	A 24V	A phase pulse input 24V
19	19	A 12V	A phase pulse input 12V
18	18	A 5V	A phase pulse input 5V
17	17	A COM	A phase pulse input COM
16	16	B 24V	B phase pulse input 24V
15	15	B 12V	B phase pulse input 12V
14	14	B 5V	B phase pulse input 5V
13	13	B COM	B phase pulse input COM
12	12	P 24V	Preset input 24V
11	11	P 12V	Preset input 12V
10	10	P 5V	Preset input 5V
09	09	P COM	Preset input COM
08	08	G 24V	Auxiliary function input 24V
07	07	G 12V	Auxiliary function input 12V
06	06	G 5V	Auxiliary function input 5V
05	05	G COM	Auxiliary function input COM
04	04	OUT0	Comparison output 0
03	03	OUT1	Comparison output 1
02	02	24V	External power input 24V
01	01	24G	External power input GND

Terminal (XBF-HD02A)

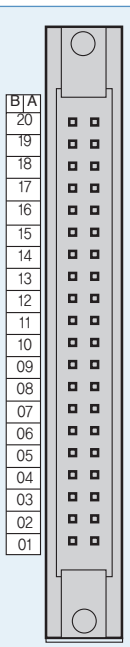

Pin arrangement		Signal name	
B ch1	A ch0		
20	20	A I +	A I phase differentiation input +
19	19	A I -	A I phase differentiation input -
18	18	A II +	A II phase differentiation input +
17	17	A II -	A II phase differentiation input -
16	16	B I +	B I phase differentiation input +
15	15	B I -	B I phase differentiation input -
14	14	B II +	B II phase differentiation input +
13	13	B II -	B II phase differentiation input -
12	12	P 24V	Preset input 24V
11	11	P 12V	Preset input 12V
10	10	P 5V	Preset input 5V
09	09	P COM	Preset input COM
08	08	G 24V	Auxiliary function input 24V
07	07	G 12V	Auxiliary function input 12V
06	06	G 5V	Auxiliary function input 5V
05	05	G COM	Auxiliary function input COM
04	04	OUT0	Comparison output 0
03	03	OUT1	Comparison output 1
02	02	24V	External power input 24V
01	01	24G	External power input GND

Ethernet (XBL-EMTA)

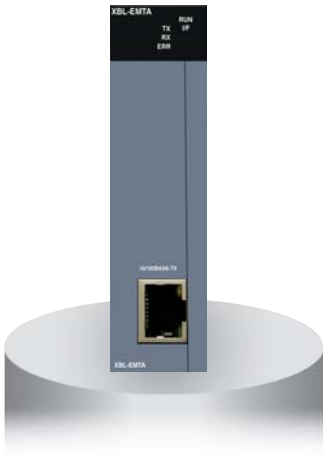

Item		XBL-EMTA
Communication spec.		10/100 Base-TX
Protocol		TCP/IP, UDP/IP
Service	With LS PLCs	High-speed link, P2P service
	With other devices	P2P service
	Application	XGT Dedicated protocol Server/Client, Modbus/TCP Server/Client
HS link sending/Receiving data		200words/block (Max. 64blocks)
No. of channel Connectable to upper stage		6 channels
Service		Communication with PC (HMI) and external devices, High-speed communication among LSIS PLCs
Media		UTP/STP Category 5
Current consumption (mA)		300

RS-232C, RS-422 / 485

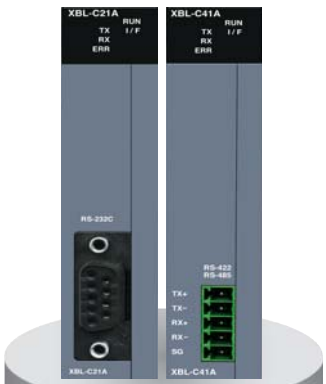

XBL-C21A
XBL-C41A

Item		Built-in RS-232C	XBL-C21A	Built-in RS-485	XBL-C41A
Interface		RS-232C 1ch	RS-232C 1ch	RS-485 1ch	RS-422 / 485 1ch
MODEM function		Remote communication via the external MODEM (XBL-C21A Only)			
Mode	Dedicated mode	1:1 or 1:N via the dedicated protocol			
	XG5000 mode	Program download, Upload and control via the remote control			
	P2P mode	Communication defined by the protocol using XG-PD XGT/Modbus master			
Operation mode	Server (slave)	XGT/Modbus server, User-defined communication			
	Client (master)	XGT/Modbus P2P Master, User-defined communication			
Data format	Start Bit	1			
	Data Bit	7 or 8			
	Stop Bit	1 or 2			
	Parity	Even / Odd / None			
	Setting	Setting by XG-PD parameter			
Synchronous		Asynchronous			
Speed (bps)		1,200/2,400/4,800/9,600/19,200/38,400/57,600/115,200 bps			
Station number		Setting by XG-PD, Max. 32 stations			
Distance		RS-232C: Max.15m (Expansion by MODEM), RS-422/485: Max 500m			
MODEM communication		–	Support	–	–
Network		1 : 1		1 : N	
Diagnostic		Via LED and XG-PD			
Max. expansion		Built-in	2 stages	Built-in	2 stages

RAPIEnet (XBL-EIMT)

Item		XBL- EIMT
Transmission standard	Transmission speed	100Mbps
	Transmission method	Base band
	Max. extension distance between nodes	100m
	Max. number of nodes	64
	Max. protocol size	1,516 bytes
	Access method to service zone	CSMA / CD
	Frame error check	CRC 32 = $X^{32}+X^{26}+X^{23}+\cdots\cdots+X^{2}+X+1$
	Normal communication guarantee	Max. 1,200 (packet/sec)
Basic standard	Dimension (mm)	90(H) x 27(W) x 60(D)
	Current consumption (mA)	290
	Weight (g)	102

Ethernet/IP (XBL-EIPT)

Item		XBL- EIPT
Transmission standard	Transmission speed	100Mbps
	Transmission method	Base band
	Max. extension distence between nodes	100m
	Access method to service zone	CSMA/CD
	Frame error check	CRC 32 = $X^{32}+X^{26}+X^{23}+\cdots\cdots+X^{2}+X+1$
Topology		Line, Star
The number of connections (Client/Server)	TCP	16 / 32
	CIP (IO communication)	32 / 64
Number of Max. services (P2P)		2
Number of Max. installations		2
Max. setting data size per block	Periodic client	500 bytes
	Aperiodic client	512 bytes
Basic standard	Dimension (mm)	90(H) x 27(W) x 60(D)
	Current consumption(mA)	290
	Weight (g)	102

Profibus-DP Module (XBL-PMEC, XBL-PSEA)

Item		XBL-PMEC	XBL-PSEA
Module Type		Slave	
Network Type		Profibus-DP	
Standard		EN501170/DIN19245	
Interface		RS-485 (Electric)	
Topology		Bus type	
Modulation Type		NRZ (Non Return to Zero)	
Protocol		Profibus DP-V0	
Max. Distance & Transmission Speed	Distance (m)	Send Speed (bps)	
	1,200	9.6k/19.2k/93.75k/187.5k	
	400	500k	
	200	1.5M	
	100	3M/6M/12M	
Max. number of stations per segment		32 (including master & repeater)	
Cable used		Electric-twist shielded pair cable	
Max. Communication size		Input : 122 Word Outpuut : 122 Word	
Max. Communication size per block		Input : 64 Word Outpuut : 64 Word	
Communication Transmission cycle		10/20/50/100/200/500ms, 1/5/10s	
Communication Receive cycle		Main unit scan × 2 + Data receive time + Communication module scan	
Max. number of units installed		2 units	
Communication Parameters to set		XG5000 (setting station and high-speed link parameter block)	
Internal-consumed current (mA)		300	250
Weight (g)		86 (including connector: 122)	

APPLICSTION

DeviceNet Module
(XBL-DSEA)

	Item		XBL-DSEA
Transmission Specification	Transmission Speed (kbps)		125/250/500
	Transmission Type		Poll, Bit strobe, COS, Cyclic
	Communication distance (m)	Thick Cable	500 (125kbps)/250 (250kbps)/100 (500kbps)
		Thin Cable	100 (125/250/500kbps)
	Terminal resistance (Ω)		121 (1%, 1/4W)
	Max.drop length (m)	125 kbps	6 (Max. extended length 156)
		250 kbps	6 (Max. extended length 78)
		500 kbps	6 (Max. extended length 39)
	Data Packet		0~8 Bytes
	Message Access Control		CSMA/NBA
	Network Structure		• Trunk/drop line • Power/Signal cable inside the identical network cable
	Bus Type		• Poll type
	Max. number of nods		Up to 64 (including master) MAC IDs (MAC Identifier)
	System Features		Insertion and removal of nod available in voltage On status
	Operation Voltage		DC 24V
	Diagnosis Function		Module: Checks duplicated station/ Checks CRC error SyCon: Detects defective station/Checks BusOff/Auto-scan function XG5000: Monitors High-speed link
	Master/Slave Operation		Available only in slave
Parameter setting			Setting to High-speed link of XG5000 (RS-232C of CPU module or USB port)
XG5000 (High-speed link)	Data process unit		Word
	Send/Receive period		Select among 10ms, 20ms, 50ms, 100ms, 200ms, 500ms, 1s, 5s and 10s - Default : 20ms
	Max. communication point		Send 2048points, Receive 2048 points, 256 bytes respectively
	Max. block number		64 (Setting range: 0~63)
	Max. point number per block		1024 points (64 Words)
Basic Specification	Max. modules installed		Up to 2
	Internal-consumed current (mA)		100mA
	Weight (g)		110

Rnet
(XBL-RMEA)

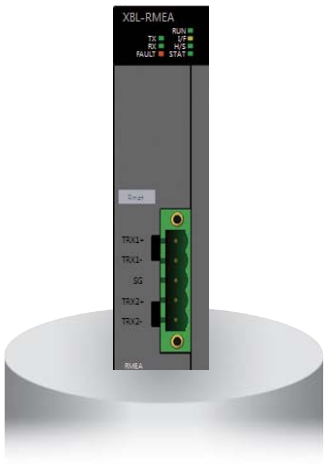

Item		XBL-RMEA
Transmission Speed		1Mbps(Rnet I/F modules common)
Max. Tx distance		Max. 750m
Connection Cable		Twisted pair shielded cable
Maximum stations connected	Network	Master station 1[station no:0(fixed)] + Slave stations up to 31[station no:1~63], Note 1) - Only 1 master is available in the network.
Diagnostic function		XG5000 : High Speed Link Monitoring
Terminal resistance (Ω)		110Ω (±5%), 1/2W
Master/Slave operation		Only available as Master
XG5000(HS Link)	Data Processing unit	Byte
	Tx/Rx cycle	Selection among 20ms, 50ms, 100ms, 200ms(default), 500ms, 1s, 5s, 10s
	Max. Communication points.	3,780 Bytes (slave 31stations * 120Bytes/station)
	Max. Block number	64 (setting range : 0~63)
	Max. points by Block	120 Byte (60words)
	Auto scanning	Supported
Specification	Max. module mounted	2 modules

CANopen Module
(XBL-CMEA, XBL-CSEA)

Item		XBL-CMEA	XBL-CSEA
Transmission Speed		10, 20, 50, 100, 125, 250, 500, 800, 1000Kbps	
Num. of port		1	
Max. node		32	-
PDO	TPDO	Total 32	64
	RPDO		64
Max. size of data per PDO		8Byte	
PDO transfer type		Synchronous acyclic (0), synchronous cyclic (1~240), RTR (252~253), time-event trigger(254~255)	
Support SDO		Client 127/Server 1	Server 1
SDO transfer type		Expedited, Normal	-
Access method		CSMA/BA (Carrier Sense Multiple Access/Bitwise Arbitration)	
Topology		BUS	
SYNC Service		Producer Cycle : 20~5000ms	Consumer
NMT. eode control		NMT master	NMT slave
Emergency		Save the last five per slave	Save up to last 10
NMT. error control		Heartbeat, Life guarding	Heartbeat
Network scan		O	-
Size (mm)		90 (H)X27 (W)X60 (D)	
Current consumption (mA)		211	202
Weight (g)		78	

Option modules

Option modules	
XBO-AD02A	Voltage/Current, Input 2 chs
XBO-DA02A	Voltage/Current, Output 2 chs
XBO-AH02A	Voltage/Current, Input 1 ch
	Voltage/Current, Output 1 ch
XBO-TC02A	TC (Thermocouple), Input 2 chs
XBO-RTCA	RTC (Real Time Clock)
XBO-DC04A	DC 24V, Input 4 points
XBO-TN04A	Transistor (Sink), Output 4 point
XBO-RD01A	RTD (Resistance Temperature Detect, Input 1 ch)

Smart link

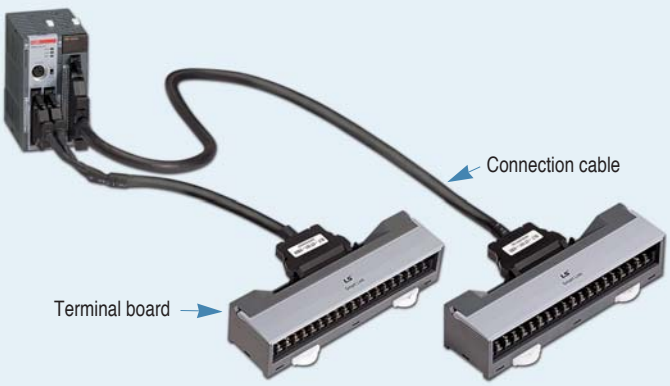

Connection cable	XBF-PD02A	XBF-HO02A	XBF-HD02A	XBE-DC32A	XBE-TN32A	XBE-TP32A	XBM-DN16S	XBM-DN32S	XBM-DN32H	XBM/XEM-DN32HP (H2)	XGB-UP
R40H/20HH-05S-XBM3	–	–	–	–	–	–	●	●	–	–	–
R40H/20HH-10S-XBM3	–	–	–	–	–	–	●	●	–	–	–
C40HH-05SB-XBI	●	●	●	●	●	●	–	–	●	●	●
C40HH-10SB-XBI	●	●	●	●	●	●	–	–	●	●	●
C40HH-15SB-XBI	●	●	●	●	●	●	–	–	●	●	●
C40HH-20SB-XBI	●	●	●	●	●	●	–	–	●	●	●
C40HH-30SB-XBI	●	●	●	●	●	●	–	–	●	●	●
C40HH-05SB-XBE	–	–	–	–	●	●	–	–	–	–	–
C40HH-10SB-XBE	–	–	–	–	●	●	–	–	–	–	–
C40HH-15SB-XBE	–	–	–	–	●	●	–	–	–	–	–
C40HH-20SB-XBE	–	–	–	–	●	●	–	–	–	–	–
C40HH-30SB-XBE	–	–	–	–	●	●	–	–	–	–	–
C40HH-05SB-XBE	–	–	–	–	●	–	–	–	–	–	–
C40HH-10SB-XBE	–	–	–	–	●	–	–	–	–	–	–
C40HH-15SB-XBE	–	–	–	–	●	–	–	–	–	–	–
C40HH-20SB-XBE	–	–	–	–	●	–	–	–	–	–	–
C40HH-30SB-XBE	–	–	–	–	●	–	–	–	–	–	–

Software

XG5000
(Programming software)

- Program editing & Engineering software
- Windows-based easy operation
- Multi-PLC, Multi-programming support
- Various monitoring and diagnosis functions
- Vista 2000, XP (Limited use in Windows 98, ME)

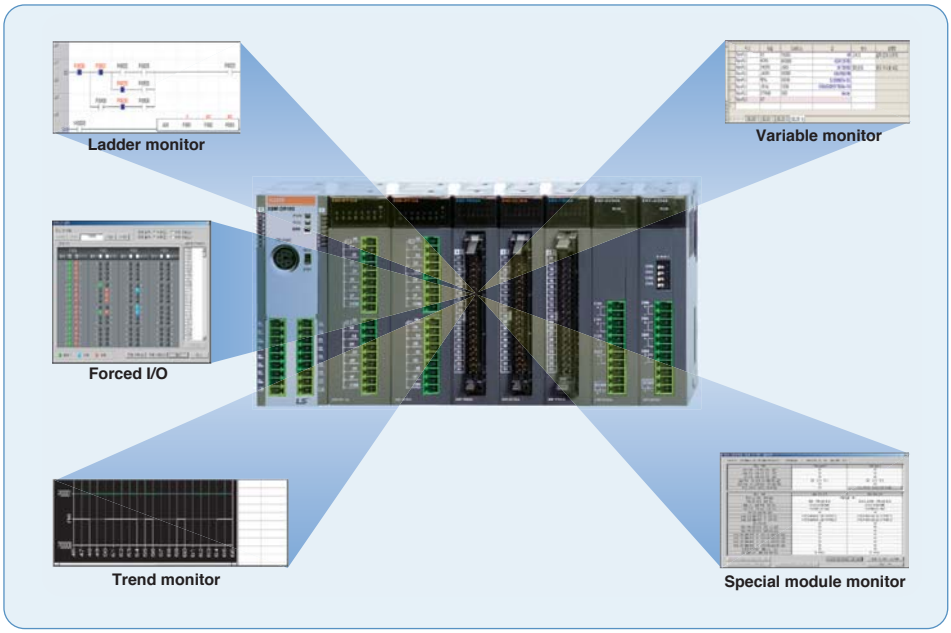

XG-PD
(Network setting software)

- Convenient network setting
- Extended monitoring function for network system and communication modules
- Fast interface with CPU by effective network management
- Various built-in diagnosis, functions
  (CPU condition, Link conditon, Service condition, Frame monitoring)

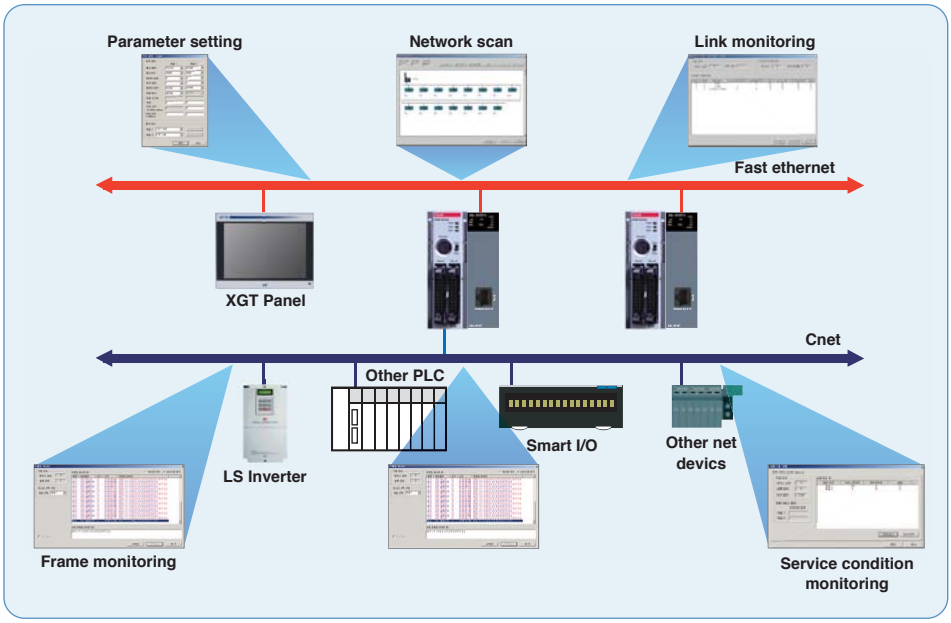

APPLICSTION

Main Specification

- Aluminum body frame, responsive touch screen.
- Easy-to-use Multi-touch, gesture, dual screen, portrait mode.
- Multi connected with 1Gbits 2ch. Ethernet between PC to PLC.
- Various interfaces : USB host /device, SD card, HDMI.
- High resolution : 1024 X 768
- IP66, UL type 4x, NEMA 4x standards
- Explosion proof. IECEx, ATEX, KCs

Item		iXP2-0800A/D	iXP2-1000A/D	iXP2-1200A/D	iXP2-1500A/D
Display type		TFT color LCD			
Screen size		8.4″	10.4″	12.1″	15″
Display resolution		800×600	1,024×768		
Color indication		24-bit color (16.7M colors)			
Backlight		LED method, automatic On / Off support			
Backlight lifetime		40,000 hour			
Touch panel		Capacitive touch			
Audio output		Magnetic buzzer (85dB)			
Processor		1GHz, Dual core			
Memory	Flash	1GB			
	Operating RAM	1GB			
	Backup RAM	1 Mbyte			
Backup data		Date / Time data, Logging / Alarm / Recipe data, Non-volatile devices			
Battery		CR2032(3.0V/210mAh, About 3years/25℃)			
Video output		1 × HDMI			
Ethernet		1 ×10Base-T / 100Base-TX, 1 × 10Base-T / 100Base-TX / 1000Base-T			
USB host		3 x USB 2.0 (Front × 1, Rear x 2)			
USB device		1 × USB 2.0 (Send / Receive front, PC and project data etc.)			
RS-232C		1 × RS-232C (DSUB 9 / Male type)			
RS-422/485		1 × RS-422/485 (Terminal block)			
Multi-language		Can display 12 languages simultaneously			
Animation		GIF format support			
Recipe		Support			
Data logging		Support			
Script launcher		Support			
Standard certification		CE, KC, UL, IECEx, ATEX, KCs			
Protection standard		IP66, Conform to the UL type 4x, NEMA 4x standard			
Explosion proof		Ex nA IIC T5 Gc, Ex tc IIIC T100℃ Dc IP64			
Dimensions (mm)		240 ×180 × 60	271×212× 60	313 × 239 x 60	395 × 294 × 66
Panel cut (mm)		228.5 × 158.5	259.0 × 201.0	301.5 × 227.5	383.5 × 282.5
Power		iXP2-xxxxA : AC100 / 240V, iXP2-xxxxD : DC24V			
Power consumption (W)		25	25	30	30
Weight (Kg)		1.87	2.35	3.0	4.6

XGT Panel iXP Series

Main Specification

- 1GHz 32bit RISC Embedded CPU
- 16,777,216 TFT color LCD
- 128MB display data and 1MB back-up memory
- Ethernet 1ch, RS-232C 2ch, RS-422/485 1ch
- USB host 3ch and device 1ch
- SD memory card interface

Main Functions

- PLC ladder monitoring (XGK/XBC PLC only)
- Web Server/Data Server
- Path through
- XP-Remote : Remote controlling and monitoring

Item		iXP50-TTA/DC	iXP70-TTA/DC iXP70-TTA/AC	iXP80-TTA/DC iXP80-TTA/AC	iXP90-TTA/DC iXP90-TTA/AC
Display type		TFT color LCD			
Screen size		21.3cm (8.4″)	26.4cm (10.4″)	30.7cm (12.1″)	38.1cm (15″)
Display Resolution		800×600 pixel (SVGA)	800×600 pixel (SVGA)	800×600 pixel (SVGA)	1,024×768 pixel (SVGA)
Color indication		16-bit and 24-bit Color (default: 16-bit Color)			
Indication degree		Left/Right: 80 deg. Up: 80 deg. Down: 60 deg.	Left/Right: 80 deg. Up: 60 deg. Down: 80 deg.		
Backlight		LED Type			
Backlight duration		70,000 hours	60,000 hours		
Brightness		500 cd/㎡	700 cd/㎡	550 cd/㎡	800 cd/㎡
Touch panel		4-Line type, analog			
Sound Output		Magnetic buzzer (85dB)			
Process		ARM Cortex-A8 Core (32bit RISC), 1GHz			
Memory	Flash	512MB(display 128MB)	1GB(display 128MB)		
	Operating RAM	256MB	512MB		
	Backup RAM	1MB			
Backup data		Date/Hour data, Logging/Alarm/Recipe data and nonvolatile device			
Battery duration		Approx. 3 years (Operating ambient temperature of 25℃)			
Ethernet		1 channel, 10/100BASE-TX			
USB Host		3 channels, USB 2.0 host (mouse, keyboard, printer* and USB memory driver is available)			
		1 channel, USB 2.0 slave (for download and upload project file)			
RS-232C		1 channel			
RS-422/485		1 channel, RS-422/485 mode			
SD Card		1 Slot (SDHC)			
Human sensor		-	Detection range: side 1-1.5m, front 40-50cm Angle: high/low 100°, left/right 140° (detecting 5-20 micron infrared light)		
Audio output		LINE-OUT 1 channel			
Expansion module		For communication and I/O option module (available later)			
VM module		-	4 channels video input (available later)		
Multi-language		Up to 12 language simultaneously			
Animation		GIF format is available			
Recipe		available			
Data logging		available			
Script executor		available			
Certifications		CE, UL(cUL), KC			
Protection standard		IP65			
Dimension (mm)		240.5×180.0×54.4	270.5×212.5×60.0	313.0×239.0×56.0	395.0×294.0×60.0
Panel cut (mm)		228.5×158.5	259.0×201.0	301.5×227.5	383.5×282.5
Rated voltage		DC24V	DC12/24V (AC 100-240V)		
Power consumption (W)		30.8	42.3	42.3	42.3
Weight(Kg)		1.9	2.2	2.4	3.9

* SEWOO printer only

APPLICSTION

Main Specification

- TFT LCD-applied wide type
- LED Backlight adopted for enhanced contrast ratio and low-power
- PLC Ladder monitoring function: Only XGK/XBC supports*
- Web Server* / Data Server* / Path-Through Function*
- Remote Viewer Function*
- Screen editor : XP-Builder

* Functions that support only the TTA model

Item		eXP20-TTA/DC, CERTI	eXP20-TTA/DC	eXP30-TTA(B)/DC	eXP30-TTE/DC	eXP40-TTE/DC	eXP40-TTA(B)/DC	eXP40-TTA/DC, CERTI	eXP60-TTA(B)/DC	eXP60-TTA/DC, CERTI
Display type		TFT color LCD								
Screen size		10.9cm (4.3inch)		14.2cm(5.6inch)		17.8cm(7inch)			25.9cm(10.2inch)	
Display Resolution		480×272 pixel		640 x 480 pixel		600 x 800 pixel(WVAG)				
Color indication		24-bit Color(16.7M)		16-bit Color(65,536 Color)		24-bit Color(65,535 Color)			16-bit Color(65,536)	
Indication degree		Left/Right:60 deg. Upper:40 deg. Lower:60 deg.							Left/Right:55 deg. Upper:35 deg. Lower:55 deg.	
Backlight		LED Type (Supports backlight auto-off function)								
Backlight duration		30,000 hours		20,000 hours						
Touch panel		4-Wire Resistive, analog								
Audio output		Magnetic buzzer (85dB)								
Process		i.MX283(454MHz)								
Memory	Flash	128MB(Screen 64MB)								
	Operation RAM	128MB								
	Backup RAM	128KB								
Backup data		Date/Hour data, Logging/Alarm/Recipe data and nonvolatile device								
Battery duration		Approx. 3 years (Operating ambient temperature of 50℃)								
RTC		Time error Approx. 3 sec/1day(Operating ambient temperature of 25℃)								
Ethernet		1 channel, IEEE802.1a, 10Base-T/100Base-TX			-			1 channel, IEEE802.1a, 10Base-T/100Base-TX		
USB Host		1 channel, USB 2.0 Host (mouse, keyboard, printer and USB memory driver is available)								
USB Device		-		1 channel, USB 2.0 Device (for download and upload project)						
RS-485, RS-232C		1channel, RS-232C (DSUB 9/Male Type)				2channels, RS-485, RS-232C (DSUB 9/Male Type)				
RS-422/485		1channel, RS-422/485 (DSUB 9/Male Type)				1channel, RS-422/485 mode (Terminal Type)				
Multi-language		Up to 12 language simultaneously								
Animation		GIF format is available								
Recipe		available								
Data logging		available								
Script executor		available								
Certifications		CE, UL, KC, UL Type4X (Separate product, CERTI)								
Protection standard		IP66								
Dimension (mm)		128×102×32		300×200×68		208.0×154.0×44.4			276.0×218.0×44.4	
Panel cut (mm)		119×93		156.0×123.5		192.0×138.0			260.0×202.0	
Rated voltage		DC24V								
Power consumption (W)		4.6W		7.2W			6.5W		10W	
Weight(Kg)		0.3		0.42	0.39	0.62	0.63		1.08	

* SEWOO printer only

Graphic type XP30/XP40/XP50/XP70/XP80/XP90

- High and vivid distinction with 65,536 colors
- High quality raster and vector symbols
- Various BMP JPG GIF graphic file support: BMP, JPG, GIF, WMF, etc
- Simple animation effects: animated GIF
- 10/100BASE-T Ethernet interface
- Convenient and easy screen editing
- Strengthened data management: Logging, Recipe, and Alarm
- Read function of a controller's state information: Monitoring and maintenance
- Multi-lingual display: up to 8 languages
- Offline and concurrent simulation with XG5000
- Easy to change the address of the graphic objects: Tag function with XGT Panel
- USB host for peripheral devices: USB Drive, Mouse, keyboard, printer, etc
- Sufficient memory for screen data: 10MB

Model Type			XP30-BTE/DC	XP30-BTA/DC	XP30-TTE/DC	XP30-TTA/DC	XP40-TTE/DC	XP40-TTA/DC	XP50-TTA/DC	XP70-TTA/AC XP70-TTA/DC	XP80-TTA/AC XP80-TTA/DC	XP90-TTA/AC
			Mono		Color							
Display Element			Mono Blue LCD		TFT Color LCD							
Screen Size			14cm (5.7")				17.7cm (7")		21cm (8.4")	26cm (10.4")	31cm (12.1")	38cm (15")
Resolution			320×240				800×480		640×480		800×600	1024×768
Color			8-column Gray Scale		256 colors	65,536 colors	65,536 colors					
Backlight			LED mode						CCFL(can be replaced), Auto On/Off			
			50,000 hours			60,000 hours	30,000 hours		50,000 hours			60,000 hours
Contrast			Adjustable		Fixed							
Brightness			230cd/㎡			600cd/㎡	280cd/㎡		480cd/㎡	430cd/㎡	400cd/㎡	450cd/㎡
Viewing Angle	Up/Down(Degree)		20/40		80/80	70/70	50/60		50/60	45/65	45/75	60/50
	Left/Right(Degree)		45/45		80/80		65/65		65/65	65/65	65/65	75/75
Touch Panel			4-wire system, analogue				Analog resistive		8-wire system, analogue			
Movement LED			Green: Normal RUN (Monitoring & drawing data download) Red: Error (Communication error & drawing data error)									
Memory	Screen Data		4MB	10MB	4MB	10MB	4MB	10MB	10MB			20MB
	Backup Data		128KB	512KB	128KB	512KB	128KB	512KB				
Ethernet			-	1ch, 10/100Base-T	-	1ch, 10/100Base-T	-	1ch, 10/100Base-T				
USB Interface			USB Host X 1	USB Host X 2	USB Host X 1	USB Host X 2	USB Host X 1		USB Host X 2			
Serial	RS-232C		2ch(1 port for PC communication)									
	RS-422/485		1ch, 422/485 optional mode									
CF Card Interface			-	CF card (TAPE-1)×1	-	CF card (TAPE-1)×1	-		CF card (TAPE-1)×1			
AUX Interface			-	Optional	-	Optional	-		Optional			
Certification			CE, UL, KC									
Protection			IP65 (Front Water Proof Structure)									
Size(W×H×D)mm			181 x 140 x 56.5	181 x 140 x 66.5	181 x 140 x 56.5	181 x 140 x 66.5	203.5 x 153.5 x 41.5		240 x 174 x 73	317 x 243 x 73		395 x 294 x 73
Panel Cut (W×H)mm			155.0 x 123.5				192 x 138		228.5 x 158.5	294.5 x 227.5		383.5 x 282.5
Weight (kg)			0.62	0.75	0.62	0.75	2.2	2.4	1.4	2.2	2.4	3.9
Power	Rated Voltage		DC 24V							AC100~220V, DC 24V		AC100~220V
	Permitted Voltage	AC	-							MIN 85 VAC, MAX 264 VAC		
		DC	MIN 19.2 VDC, MAX 28.8 VDC									–
	Power Consumption(W)	AC	–							21.8	31.9	31.9
		DC	9.7	16.9	9.6	17.4	9.8	9.8	18.7	20.1	25.7	–

APPLICSTION

Text type XP10

- Screen: 192×64 Graphic STN LCD
- System RAM: 1000 words
- Flash memory: Program/Parameter back up
- Communication: Half-duplex comm.
  - Baud rate: 1200~115200 bps
  - Master/slave setting available
  - RS-232C/RS-485 2 CH separate to use
- Power reguirements - 24 V input or 5 V direct input by LS PLC
- Various function key - ESC, ALM, SET, ENT, F1~F4, Arrow keys
- Panel Editor - Easy programming and H/W setting

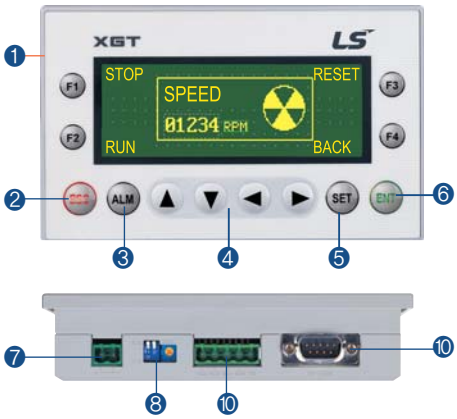

1. Key to control PLC device and screen
2. ESC key
3. Alarm history
4. Data input and Screen change
5. PLC data setting
6. Enter key
7. DC24V input terminal
8. RS-232C port to download a project
9. Brightness adjustment
10. RS-422 port

Item		Specifications	
		XP10BKA/DC	XP10BKB/DC
Input voltage	5VDC	DC 4.9 ~ 5.1 (RS-232C port)	
	24VDC	DC 21.6 ~ 26.4 (DC Input connector)	
	Consumption current	Less than 200mA	
Display		LED back-light (192 x 64 Dots)	
Communication interface		RS-232C, RS-422/485	
Flash memory		256K bytes	
Language		Default: English, Can be switched to Korean/Chinese/Russian	
RTC		None	Supports
Download specification		115,200bps	
Keys		12 Keys (F1~F4, ESC, ALM, ▲, ▼, ◀, ▶, SET, ENT)	

Product list

Product list

Item	Model	Specifications
Block type unit (U)	XBC/XEC-DN(P)32U	AC 110-220V, 16points DC24V input, 16points transistor sink(source) type output
	XBC/XEC-DR28U	AC 110-220V, 16points DC24V input, 12points relay output
	XBC/XEC-DN(P)32UP	AC 110-220V, 16points DC24V input, 16points transistor sink(source) type output, 4 axes built-in positioning
	XBC/XEC-DR28UP	AC 110-220V, 16points DC24V input, 12points relay output, 4 axes built-in positioning
	XBC/XEC-DN(P)32UA	AC 110-220V, DC24V input, 16points transistor sink(source) type output, 8 channel built-in analog
	XBC/XEC-DR28UA	AC 110-220V, DC24V input, 12points relay output, 8 channel built-in analog
	XBC/XEC-DN(P)32U/DC	DC 24V, 16points DC24V input, 16points transistor sink(source) type output
	XBC/XEC-DR28U/DC	DC 24V, 16points DC24V input, 12points relay output
	XBC/XEC-DN(P)32UP/DC	DC 24V, 16points DC24V input, 16points transistor sink(source) type output, 4 axes built-in positioning
	XBC/XEC-DR28UP/DC	DC 24V, 16points DC24V input, 12points relay output, 4 axes built-in positioning
	XBC/XEC-DN(P)32UA/DC	DC 24V, DC24V input, 16points transistor sink(source) type output, 8 channel built-in analog
	XBC/XEC-DR28UA/DC	DC 24V, DC24V input, 12points relay output, 8 channel built-in analog
Block type unit (High performance)	XBC/XEC-DR32H	AC 100 - 240V, DC24 input 16 points, relay output 16 points
	XBC/XEC-DR64H	AC 100 - 240V, DC24 input 32 points, relay output 32 points
	XBC/XEC-DN32H	AC 100 - 240V, DC24 input 16 points, transistor output 16 points (Sink)
	XBC/XEC-DN64H	AC 100 - 240V, DC24 input 32 points, transistor output 32 points (Sink)
	XEC-DP32H	AC 100 - 240V, DC24 input 16 points, transistor output 16 points (Source)
	XEC-DP64H	AC 100 - 240V, DC24 input 32 points, transistor output 32 points (Source)
	XBC-DR32H/DC	DC 24V, DC24 input 16 points, relay output 16 points
	XBC-DR64H/DC	DC 24V, DC24 input 32 points, relay output 32 points
	XBC-DN32H/DC	DC 24V, DC24 input 16 points, transistor output 16 points (Sink)
	XBC-DN64H/DC	DC 24V, DC24 input 32 points, transistor output 32 points (Sink)
	XEC-DR32H/D1	DC 12/24V, DC12/24 input 16 points, relay output 16 points
	XEC-DR64H/D1	DC 12/24V, DC12/24 input 32 points, relay output 32 points
Block type unit (Standard)	XBC/XEC-DR20SU	AC 100 - 240, DC24V input 12 points, relay output 8 points
	XBC/XEC-DR30SU	AC 100 - 240, DC24V input 18 points, relay output 12 points
	XBC/XEC-DR40SU	AC 100 - 240, DC24V input 24 points, relay output 16 points
	XBC/XEC-DR60SU	AC 100 - 240, DC24V input 36 points, relay output 24 points
	XBC/XEC-DN20SU	AC 100 - 240, DC24V input 12 points, transistor output 8 points (Sink)
	XBC/XEC-DN30SU	AC 100 - 240, DC24V input 18 points, transistor output 12 points (Sink)
	XBC/XEC-DN40SU	AC 100 - 240, DC24V input 24 points, transistor output 16 points (Sink)
	XBC/XEC-DN60SU	AC 100 - 240, DC24V input 36 points, transistor output 24 points (Sink)
	XBC/XEC-DP20SU	AC 100 - 240, DC24V input 12 points, transistor output 8 points (Source)
	XBC/XEC-DP30SU	AC 100 - 240, DC24V input 18 points, transistor output 12 points (Source)
	XBC/XEC-DP40SU	AC 100 - 240, DC24V input 24 points, transistor output 16 points (Source)
	XBC/XEC-DP60SU	AC 100 - 240, DC24V input 36 points, transistor output 24 points (Source)
Block type unit (Economic)	XBC/XEC-DR10E	AC 100 - 240V, 6 points DC24V input, 4 point Relay ouput
	XBC/XEC-DR14E	AC 100 - 240V, 8 points DC24V input, 6 point Relay ouput
	XBC/XEC-DR20E	AC 100 - 240V, 12 points DC24V input, 8 point Relay ouput
	XBC/XEC-DR30E	AC 100 - 240V, 18 points DC24V input, 12 point Relay ouput
	XBC/XEC-DN10E	AC 100 - 240V, 6 points DC24V input, 4 point transistor output (Sink)
	XBC/XEC-DN14E	AC 100 - 240V, 8 points DC24V input, 6 point transistor output (Sink)
	XBC/XEC-DN20E	AC 100 - 240V, 12 points DC24V input, 8 point transistor output (Sink)
	XBC/XEC-DN30E	AC 100 - 240V, 18 points DC24V input, 12 point transistor output (Sink)
	XBC/XEC-DP10E	AC 100 - 240V, 6 points DC24V input, 4 point transistor output (Source)
	XBC/XEC-DP14E	AC 100 - 240V, 8 points DC24V input, 6 point transistor output (Source)
	XBC/XEC-DP20E	AC 100 - 240V, 12 points DC24V input, 8 point transistor output (Source)
	XBC/XEC-DP30E	AC 100 - 240V, 18 points DC24V input, 12 point transistor output (Source)
Modular type unit	XBM-DN32H	DC24V, 16 pts DC24V input, 16 pts TR output, 2 axes built-in positioning (APM)
	XBM/XEM-DN32H2	DC24V, 16 pts DC24V input, 16 pts TR output, 2 axes built-in positioning (XPM)
	XBM/XEM-DN32HP	DC24V, 16 pts DC24V input, 16 pts TR output, 6 axes built-in positioning (XPM)
	XBM/XEM-DP32H2	DC24V, 16 pts DC24V input, 16 pts TR output(source), 2 axes built-in positioning (XPM)
	XBM/XEM-DP32HP	DC24V, 16 pts DC24V input, 16 pts TR output(source), 6 axes built-in positioning (XPM)

Product list

Item	Model	Specifications
Modular type unit	XBM-DR16S	DC 24V, 8-point DC24V input, 8-point relay output
	XBM-DN16S	DC 24V, 8-point DC24V input, 8-point TR output
	XBM-DN32S	DC 24V, 16-point DC24V input, 16-point TR output
Expansion I/O module	XBE-DC08A	8-point DC 24V input
	XBE-DC16A	16-point DC 24V input
	XBE-DC32A	32-point DC 24V input
	XBE-AC08A	8-point AC 110V input
	XBE-RY08A	8-point relay output
	XBE-RY16A	16-point relay output
	XBE-TN08A	8-point Transistor (sink) output
	XBE-TN16A	16-point Transistor (sink) output
	XBE-TN32A	32-point Transistor (sink) output
	XBE-TP08A	8-point Transistor (source) output
	XBE-TP16A	16-point Transistor (source) output
	XBE-TP32A	32-point Transistor (source) output
	XBE-DR16A	8-point DC 24V input, 8-point relay output
	XBE-DN32A	16-point DC24V input, 16point TR output
	XBF-AD04A	4-channel analog input (current/voltage)
	XBF-AD04C	4-channel analog input (current/voltage, resolution : 1/16000)
	XBF-AH04A	2-channel analog input (current/voltage)/2-channel analog output (current/voltage)
Special module	XBF-DV04A	4-channel analog output (voltage)
	XBF-DV04C	4-channel analog input (voltage, resolution : 1/16000)
	XBF-DC04A	4-channel analog output (current)
	XBF-DC04C	4-channel analog input (current, resolution : 1/16000)
	XBF-RD04A	4-channel RTD input
	XBF-RD01A	1-channel RTD input
	XBF-TC04S	4-channel Thermocouple input
	XBF-TC04TT	Temperature controller, Thermocouple
	XBF-TC04RT	Temperature controller, RTD
	XBF-LD02S	Load Cell input module
	XBF-PD02A	Line drive 2 axis
	XBF-PN08B	EtherCAT Positioning module, 8axes (XBC/XEC “U” only)
	XBF-PN04B	EtherCAT Positioning module, 4axes (XBC/XEC “U” only)
	XBF-AD08A	8-channel analog input (Current/voltage)
	XBF-HO02A	2-channel High-speed counter input (Open collector)
	XBF-HD02A	2-channel High-speed counter input (Line drive)
	XBL-C41A	Cnet (RS-422/485), 1ch
	XBL-C21A	Cnet (RS-232C), 1ch
	XBL-EMTA	Fast Ethernet (100Mbps), 1ch
Communication module	XBL-EIMT	RAPIEnet, 2 ch
	XBL-EIPT	Ethernet/IP, 2 ch
	XBL-EIMF	RAPIEnet I/F, Max. 2km (Fiber 2ch.), 100Mbps
	XBL-EIMH	RAPIEnet I/F (Twisted pair 1ch, Fiber 2 ch.), 100Mbps
	XBL-PMEC	Profibus-DP, Master, RS-485
	XBL-PSEA	Profibus-DP, Slave, RS-485
	XBL-DSEA	DeviceNet, Slave
	XBL-PSEA	Profibus-DP, Slave, RS-485
	XBL-RMEA	Rnet, Master
	XBL-CMEA	CANopen (10, 20, 50, 100, 125, 250, 500, 800, 1000Kbps, Num of PDO : 32)
	XBL-CSEA	CANopen (10, 20, 50, 100, 125, 250, 500, 800, 1000Kbps, Num of PDO : 64)

Product list

Item	Model	Specifications
Loader cable	PMC-310S	Connection cable (PC to PLC), 9pin(PC)-6pin(PLC)
	USB-301A	Connection cable (PC to PLC), USB
Memory module	XBO-M2MB	Memory
Option modules	XBO-AD02A	Voltage/Current, Input 2 ch
	XBO-DA02A	Voltage/Current, Output 2 ch
	XBO-AH02A	Voltage/Current, Input 1ch/Voltage/Current, Output 1ch
	XBO-TC02A	TC (Thermo couple), Input 2 ch
	XBO-RTCA	RTC (Real time clock), Battery
	XBO-DC04A	DC 24V, Input 4 points
	XBO-TN04A	TR (Sink), Output 4 points
	XBO-RD01A	RTD (Resistance temperature detector), Input 1ch

Connection cable	XBF-PD02A	XBF-HO02A	XBF-HD02A	XBE-DC32A	XBE-TN32A	XBE-TP32A	XBM-DN16S	XBM-DN32S	XBM-DN32H	XBM/XEM-DN32HP (H2)	XGB-UP
R40H/20HH-05S-XBM3	–	–	–	–	–	–	●	●	–	–	–
R40H/20HH-10S-XBM3	–	–	–	–	–	–	●	●	–	–	–
C40HH-05SB-XBI	●	●	●	●	●	●	–	–	●	●	●
C40HH-10SB-XBI	●	●	●	●	●	●	–	–	●	●	●
C40HH-15SB-XBI	●	●	●	●	●	●	–	–	●	●	●
C40HH-20SB-XBI	●	●	●	●	●	●	–	–	●	●	●
C40HH-30SB-XBI	●	●	●	●	●	●	–	–	●	●	●
C40HH-05SB-XBE	–	–	–	–	●	●	–	–	–	–	–
C40HH-10SB-XBE	–	–	–	–	●	●	–	–	–	–	–
C40HH-15SB-XBE	–	–	–	–	●	●	–	–	–	–	–
C40HH-20SB-XBE	–	–	–	–	●	●	–	–	–	–	–
C40HH-30SB-XBE	–	–	–	–	●	●	–	–	–	–	–
C40HH-05SB-XBE	–	–	–	–	●	–	–	–	–	–	–
C40HH-10SB-XBE	–	–	–	–	●	–	–	–	–	–	–
C40HH-15SB-XBE	–	–	–	–	●	–	–	–	–	–	–
C40HH-20SB-XBE	–	–	–	–	●	–	–	–	–	–	–
C40HH-30SB-XBE	–	–	–	–	●	–	–	–	–	–	–

Download cable diagram

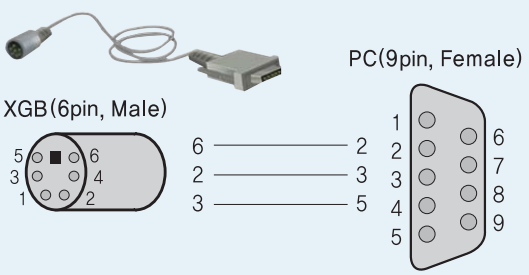

APPLICSTION

Block type unit

XBC/XEC-U (Standard)

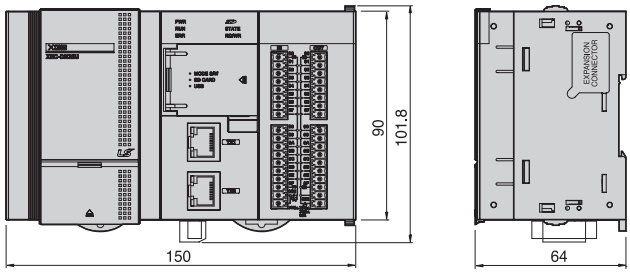

XBC/XEC-H

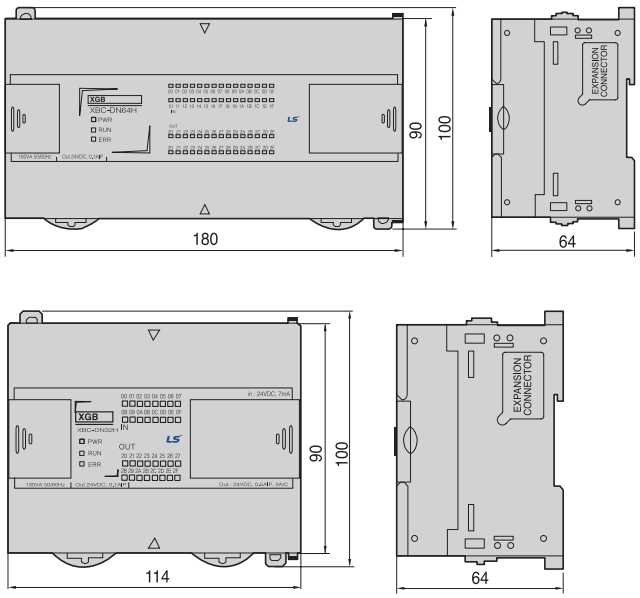

XBC/XEC-SU

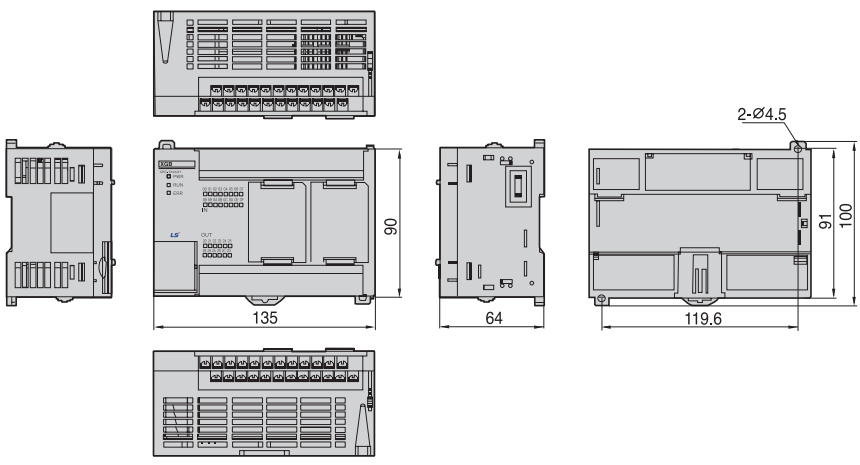

XBC/XEC-E

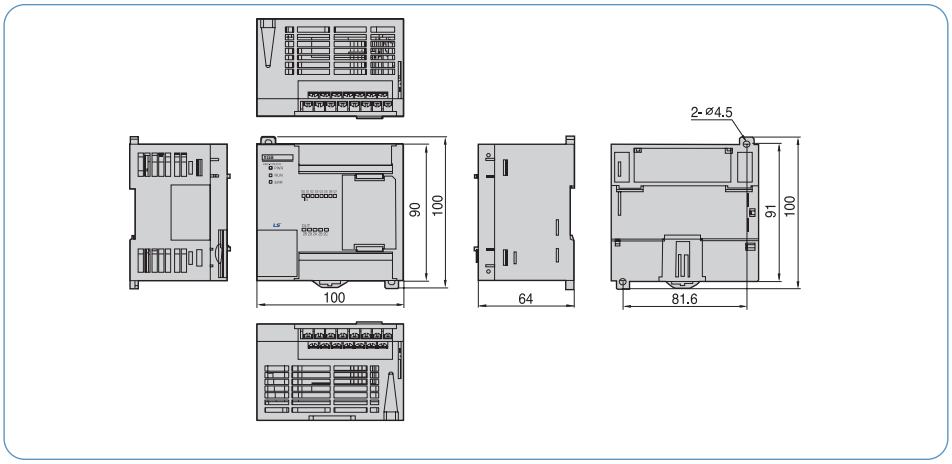

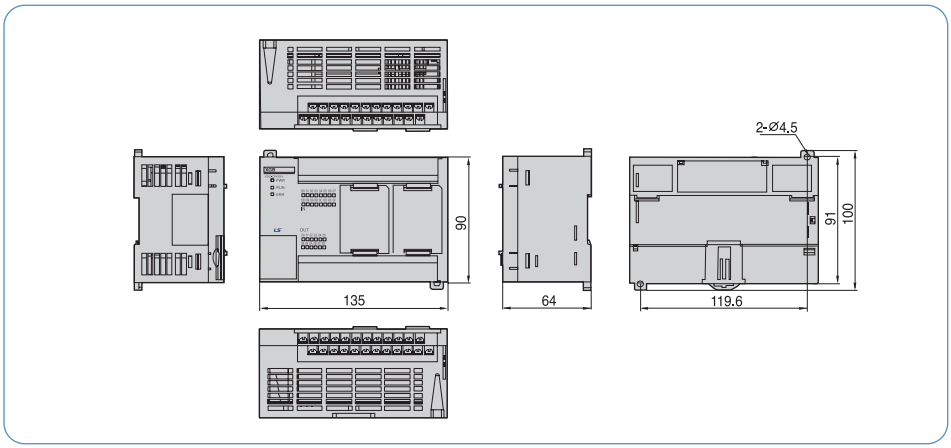

Modular type unit

XBM-S

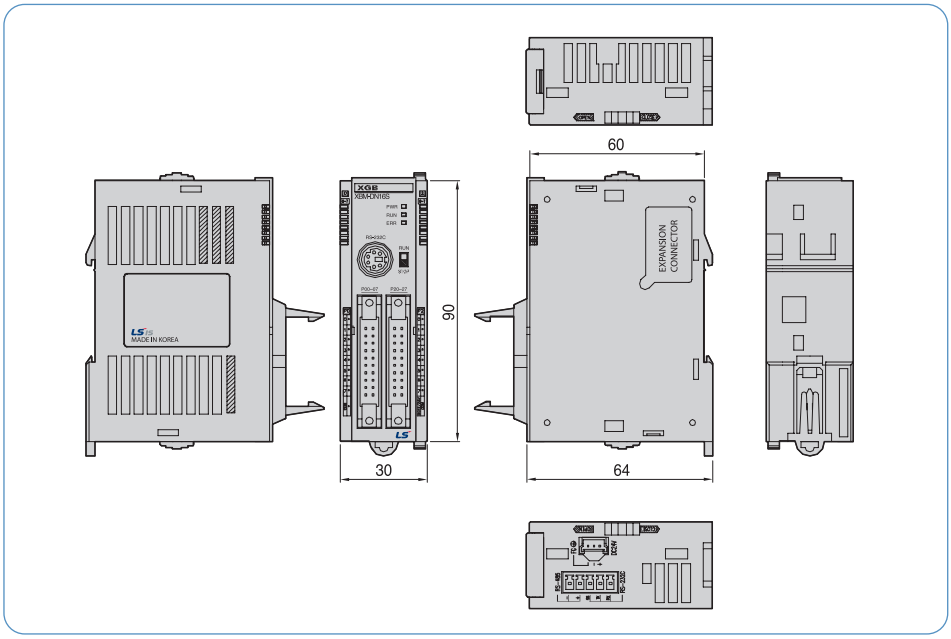

Modular type unit

XBM-H, H2, HP

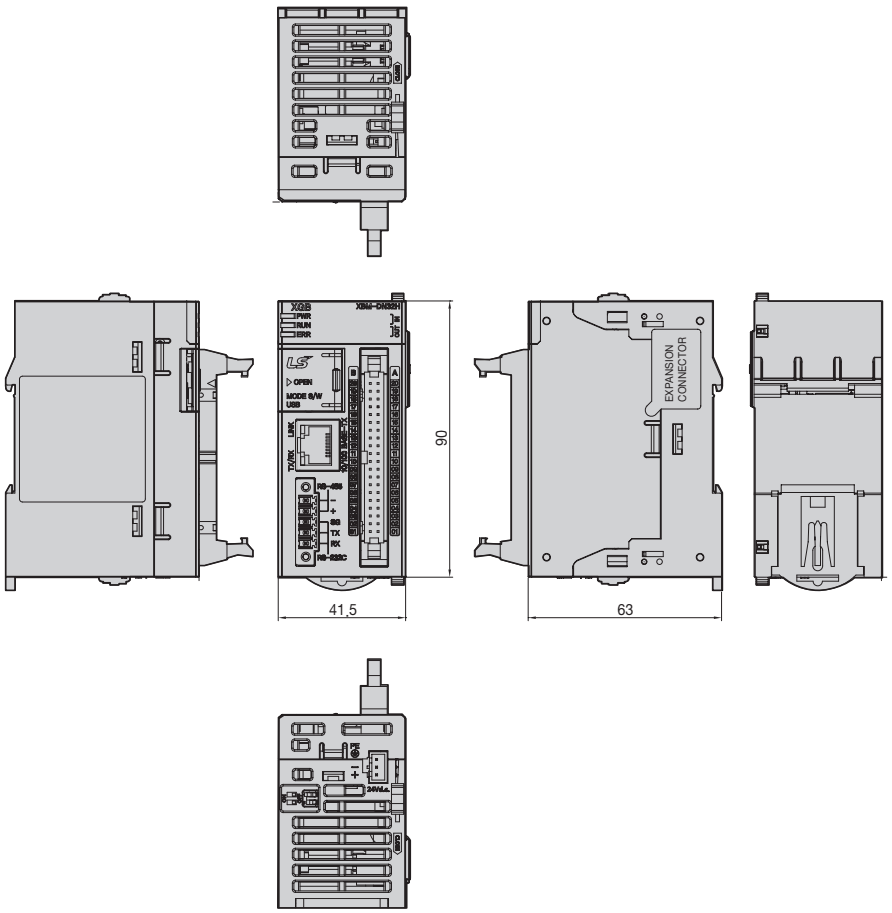

Memo

FUTURING SMART ENERGY

We open up a brighter future through
efficient and convenient energy solutions.

Safety Instructions

- For your safety, please read user's manual thoroughly before operating.
- Contact the nearest authorized service facility for examination, repair, or adjustment.
- Please contact qualified service technician when you need maintenance.
  Do not disassemble or repair by yourself!
- Any maintenance and inspection shall be performed by the personnel having expertise concerned.

- According to The WEEE Directive, please do not discard the device with your household waste.

LS IS

www.lsis.com

■Head Quarter

LS Yongsan Tower, 92, Hangang-daero, Yongsan-gu, Seoul, 04368, Korea
Tel: 82-2-2034-4870 Fax: 82-2-2034-4648 E-manil: cshwang@ lsis.com

Southeast Asia +82-2-2034-4888 cshwang@lsis.com (Charles Hwang)
Europe +82-2-2034-4676 sukyong@lsis.com (Brian Choi)
Turkey/Israel/CIS +82-2-2034-4879 dkimc@lsis.com (Daniel Kim)
Oceania +82-2-2034-4394 kacho@lsis.com (Kendra Cho)
North/Latin America +82-2-2034-4286 hkchung@lsis.com (Hank Raul Chung)
Southwest Asia/Africa +82-2-2034-4467 myleed@lsis.com (Henry Lee)
Middle East +971-4-886-5360 khchoi1@lsis.com (Lambert Choi)

■Overseas Subsidiaries

•LSIS(Dalian) Co., Ltd. (Dalian, China)
Tel: 86-411-8730-7510 Fax: 86-411-8730-7560 E-Mail: jiheo@sis.com

•LSIS(Wuxi) Co., Ltd. (Wuxi, China)
Tel: 86-510-8534-6666-8005 Fax: 86-510-8534-4078 E-Mail: sunhwank@sis.com

•LS VINA Industrial Systems Co., Ltd. (Hanoi, Vietnam)
Tel: 84-24-3882-0222 Fax: 84-24-3882-0220 E-Mail: jhchoi4@sis.com

•LSIS Middle East FZE (Dubai, U.A.E.)
Tel: 971-4-886-5360 Fax: 971-4-886-5361 E-Mail: hschoib@sis.com

•LSIS Europe B.V. (Hoofddorf, Netherlands)
Tel: 31-20-654-1424 Fax: 31-20-654-1429 E-Mail: europartner@sis.com

•LSIS Japan Co., Ltd. (Tokyo, Japan)
Tel: 81-3-6268-8241 Fax: 81-3-6268-8240 E-Mail: jschuna@sis.com

•LSIS USA Inc. (Chicago, U.S.A.)
Tel: 1-800-891-2941 Fax: 1-847-383-6543 E-Mail: sales.us@sis.com

■Overseas Branches

•LSIS Shanghai Office (China)
Tel: 86-21-5237-9977 Fax: 86-21-5237-7192 E-Mail: tsjun@sis.com

•LSIS Beijing Office (China)
Tel: 86-10-5095-1608 E-Mail: chendm@sis.com.cn

•LSIS Guangzhou Office (China)
Tel: 86-20-3818-2883 Fax: 86-20-3818-2886 E-Mail: chenxs@sis.com.cn

•LSIS Qingdao Office (China)
Tel: 86-532-8501-6058 Fax: 86-532-8501-6057 E-Mail: wangzy@sis.com.cn

•LSIS Chengdu Office (China)
Tel: 86-28-8670-3201 Fax: 86-28-8670-3202 E-Mail: yangcf@sis.com.cn

•LSIS ShenYang Office (China)
Tel:86-24-2321-9050 Fax: 86-24-8386-7210 E-Mail: lixf@sis.com.cn

•LSIS Tokyo Office (Japan)
Tel: 81-3-6268-8241 Fax: 81-3-6268-8240 E-Mail: jschuna@sis.com

•LSIS Hochiminh Office (Vietnam)
Tel: 84-28-3823-7890 E-Mail: sjbaik@sis.com

•LSIS Moscow Office (Russia)
Tel: 7-499-682-6130 E-Mail: jdpark1@sis.com

•LSIS Jakarta Office (Indonesia)
Tel: 62-21-2933-7614 E-Mail: dioh@sis.com

•LSIS Bangkok Office (Thailand)
Tel: 66-90-950-9683 E-Mail: sjleet@sis.com

•LSIS USA Western Office (U.S.A)
Tel: 1-949-333-3140 E-Mail: sales.us@sis.com

2020. 03

Specifications in this catalog are subject to change without notice due to continuous product development and improvement.

© 2006.06 LSIS Co.,Ltd. All rights reserved. / (30) 2020. 03 Human Power