

Beyond X™

Metasol VCB

Vacuum Circuit Breakers (7.2/12/17.5kV)



vector Energy

LS ELECTRIC

Metasol VCB

Features

- Rating: 7.2/12/17.5kV 16/20/25/31.5kA 630/1000/1250
- Rated breaking time: 3 cycle
- Rated short-circuit withstand characteristics: 4sec
- Rated operating sequence: O-0.3s-CO-15s-CO
- Type test level(Electrical / Mechanical life): M2, E2(List3), C2
- CB Compartment type cradle: Implementation of all kinds
- Various cradle: E, F, H type
- Control voltage
  - DC 24~30V, DC 48~60V, DC 110V, DC 125V, DC 220V
  - AC 48V, AC 100~130V, AC 220~250V
- Various accessories
  - VCB part : UVT, Second coil, Position S/W, Keylock, Button padlock, Button cover, Padlock(H type), MOC, Locking magnet, Kelock, Mecha shaft interlock lever, Low energy trip device, CTC, Manual(rotatry) Charge geared ass'y
  - Cradle part: Earthing S/W & accessary, Shutter padlock, TOC(Truck operating cell S/W), MOC(Mechanism operating cell S/W), Door interlock, Door emergency push button, Temperature sensor
  - Others: Draw-in/out handle, Manual(rotatry) charging handle, UVT Time delay controller, CTD(Condensor trip device), TM
- Automatic Draw-in/out display

Standards and Test

- IEC 62271-100 [M2, C2, E2(List3)]
- KERI [M2, C2, E2(List3)]

Type			MVL-06□20,25□06,10,13			MVL-06□32□06,10,13		
Rated voltage		[kV]	7.2					
Rated current		[A]	630	1000	1250	630	1000	1250
Rated frequency		[Hz]	50 / 60					
Rated interrupting current		[kA]	20, 25			31.5		
Rated interrupting capacity		[MVA]	250, 312			393		
Rated short-time current		[kA]	20/4sec, 25/4sec			31.5/4sec		
Rated making current		[kA]	65			81.9		
Rated interrupting time		[cycle]	3					
Withstand voltage	Frequency	[kV]	20					
	Impulse	[kV/1.2×50㎲]	60					
TRV increasing rate		[kV/㎲]	0.24					
TRV MAX Value		[kV]	12.3					
Operating duty			O-0.3s-CO-15s-CO					
Control voltage		[V]	DC 24~30V	DC 48~60V, AC 48V		AC/DC 100~130V		AC/DC 200~250V
Control current for closing		[A]	≤ 8	≤ 4		≤ 2		≤ 1
Control current for opening		[A]	≤ 8	≤ 4		≤ 4		≤ 2
Current of motor operation (steady current/Inrush current)		[A]	≤ 5 / ≤ 25	≤ 3 / ≤ 15		≤ 2 / ≤ 10		≤ 1 / ≤ 5
Standard aux contacts			4a4b, 10a10b					
Rated opening time		[s]	≤ 0.04					
No-load closing time		[s]	≤ 0.06					
Motor charging time		[s]	≤ 5					
Pole distance	P, B, H	[mm]	150			150		
	E, F	[mm]	-					
Weight	E, F, H	[kg]	83.5			91		
	Cradle (H-Type)	[kg]	150					
	P, B	[kg]	52			55		
Installation type			P, B, H					
Applicable standard			IEC 62271-100					



Contents

- Rating 02
- Ordering information 04
- Structure 06
- Accessories 06
- Control circuit diagram 08
- Dimensions 09

MVL–12□16,20,25□06,10,13			MVL–12□32□06,10,13		
12					
630	1000	1250	630	1000	1250
50 / 60					
16, 20, 25			31.5		
333, 416, 520			655		
16/4sec, 20/4sec, 25/4sec			31.5/4sec		
65			81.9		
3					
28					
75					
0.34					
20.6					
O-0.3s-CO-15s-CO					
DC 24~30V	DC 48~60V, AC 48V		AC/DC 100~130V		AC/DC 200~250V
≤ 8	≤ 4		≤ 2		≤ 1
≤ 8	≤ 4		≤ 4		≤ 2
≤ 5 / ≤ 25	≤ 3 / ≤ 15		≤ 2 / ≤ 10		≤ 1 / ≤ 5
4a4b, 10a10b					
≤ 0.04					
≤ 0.06					
≤ 5					
150			150		
210			-		
83.5			91		
150					
52			55		
P, E, F, B, H					
IEC 62271-100					

MVL–17□16,20,25□06,10,13			MVL–17□32□06,10,13		
17.5					
630	1000	1250	630	1000	1250
50 / 60					
16, 20, 25			31.5		
485, 607, 758			955		
16/4sec, 20/4sec, 25/4sec			31.5/4sec		
65			81.9		
3					
38					
95					
0.42					
30.0					
O-0.3s-CO-15s-CO					
DC 24~30V	DC 48~60V, AC 48V		AC/DC 100~130V		AC/DC 200~250V
≤ 8	≤ 4		≤ 2		≤ 1
≤ 8	≤ 4		≤ 4		≤ 2
≤ 5 / ≤ 25	≤ 3 / ≤ 15		≤ 2 / ≤ 10		≤ 1 / ≤ 5
4a4b, 10a10b					
≤ 0.04					
≤ 0.06					
≤ 5					
150					
-					
83.5			91		
170					
52			55		
P, B, H					
IEC 62271-100					

Ordering information

■ Breaker

MVL – 12 H 20 A 06

Basic model name	
MVL	VL Mecha.

Rated voltage (kV)	
06	7.2
12	12
17	17.5

Version	
P	Fixed
E	E type drawout (for MESG)
F	F type drawout (for MESG)
H	H type drawout (for MCSG)
B	Box type drawout

Interrupting current (kA)	
16	16 (7.2 kV is absent)
20	20
25	25
32	31.5

Phase distance/Compatibility	
A	150
B	210
P	150 (Tulip contact)
Q	210 (Tulip contact)
T	150 (compatible with compact type)

Rated current (A)	
06	630
10	1000
13	1250

Note) 1. P/H/B type is available for 150mm only , E/F type is available for 210mm only.
2. In case of E/F type, only 12kV, 20/25kA, 630/1250A are available.
3. In case of 7.2kV, only 630/1250A are available.
4. In case of 31.5kA, only 630/1250A, tulip type(P) are available.
5. In case of T type, only H type, 12kV, 20/25kA are available.

MVL-12H20A06 – M1 C1 T1 SB2 U1 A12 Optional

Motor control voltage	
M0	Motor none
M1	DC 110V
M2	DC 220V~250V
M3	DC 125V
M4	DC 24V~30V
M5	DC 48V~60V
M6	AC 48V
M7	AC 100V~130V
M8	AC 200V~250V

Trip coil voltage	
T0	T.C none
T1	DC 110V
T2	DC 220V~250V
T3	DC 125V
T4	DC 24V~30V
T5	DC 48V~60V
T6	AC 48V
T7	AC 100V~130V
T8	AC 200V~250V

UVT	
U0	UVT none
U1	DC 110V
U2	DC 220V~250V
U3	DC 125V
U4	DC 24V~30V
U5	DC 48V~60V
U6	AC 48V
U7	AC 100V~130V
U8	AC 200V~250V

Other accessories	
A1	Secondary trip coil
A2	Secondary trip coil with TCS contact
A3	Position S/W (Test : 1a1b, Service : 2b)
A4	Position S/W (Test : 2a, Service : 2a)
A5	Position S/W (Test : 1a1b, Service : 1a1b)
A7	Keylock (Individual key)
A8	Button padlock
A9	Button cover
AA	Lead wire
AB	User type plug (Part)
AC	Plug interlock
AD	Padlock (H type)
AE	MOC
AF	Locking magnet
AG	Keylock (Same key)
AI	Mecha shaft interlock lever
AO	Lead wire special color (blue)
AT	Low engergy trip device 25mJ
AU	Low energy trip device 100mJ
AV	CT operated coil 1A
AW	CT operated coil 5A
AZ	Manual(rotary) charge geared ass'y

Closing coil voltage	
C0	C.C none
C1	DC 110V
C2	DC 220V~250V
C3	DC 125V
C4	DC 24V~30V
C5	DC 48V~60V
C6	AC 48V
C7	AC 100V~130V
C8	AC 200V~250V

Connector and wire		
SA2	Standard	A type connector 4a4b
SA4		A type connector 10a10b
SB2		B type connector 4a4b
SB4		B type connector 10a10b
SA6	Flame retardant	A type connector 4a4b
SA8		A type connector 10a10b
SB6		B type connector 4a4b

Accessories	
CTD1	Condenser trip device (AC 110V)
CTD2	Condenser trip device (AC 220V)
UDC1	UVT time delay controller (ADC 110V)
UDC2	UVT time delay controller (ADC 220V)
UDC3	UVT time delay controller (ADC 48V)
CTU	Coil test unit

Note) 1. Replace suffix "A12" with "A147" for A1, A4 and A7.
2. Unable to install A1 and U1~U8(UVT) simultaneously.
3. Unable to install A3, A4 and A5 simultaneously.
4. Unable to install A8 and A9 simultaneously.
5. When A1 is selected the maximum available auxiliary contacts are 9a9b.
6. When A2 is selected the maximum available auxiliary contacts are 4a3b and 9a8b.
7. AC, AD, AE and AF apply only to H type.
8. In case of B-type connector the flame retardant wire is applicable to auxiliary contacts 4a4b, not to 10a10b.
9. A/B-type connectors apply to P/E/F/G/K type and B-type connector only to H type.
10. Lead wire special color (blue) is for A-type connector only.
11. If a position switch is selected, A/B-type (P/E/F/G/K-type) or B-type(H-type) connector can be selected as an option for auxiliary contacts and wiring ass'y.
12. The control power of the locking magnet of H type breaker is the same as the motor control power.
13. Flame retardant type blue wire is not available.
14. Unable to install A1 and U1~U8(UVT) simultaneously if AV and AW is installed. The maximum auxiliary contact is 4a4b with AV and AW.
15. A7[Keylock(Individual key)] and AG[Keylock(Same key)] an not be selected simultaneously.

■ Cradle

MVCL – 12 H 20 A 06 A12

Basic model name	
MVCL	Metasol VCB cradle

Rated voltage (kV)	
06	7.2
12	12
17	17.5

Interrupting current (kA)	
16	16
20	20
25	25
32	31.5

Rated current (A)	
06	630
10	1000
13	1250

Version	
E	E type drawout (for MESG)
F	F type drawout (for MESG)
H	H type drawout (for MCSG)

Phase distance/Compatibility	
Aa	150, W600
Aq	150, W550
B	210 ,E/F clip
Pa	150, W600
Pq	150, W550
Q	210, E/F tulip

Accessories			
A1	ES(Earthing switch) without option	AD	ES with locking magnet : AC220V
A2	ES(Earthing switch) with Position S/W (2a2b)	AE	Shutter padlock
		AF	TOC
A4	ES(Earthing switch) with Position S/W (6a6b)	AG	MOC
		AH	Door
A5	ES(Earthing switch) with Keylock	AJ	Door interlock
A6	ES with locking magnet : DC110V	AK	Door emergency push button
A7	ES with locking magnet : DC220V	AL	Temperature sensor
A8	ES with locking magnet : DC125V	AM	H type lead wire 4a4b (Standard)
A9	ES with locking magne t: DC24V	AN	H type lead wire 10a10b (Standard)
AA	ES with locking magnet : DC48V	AO	H type lead wire 4a4b (Flame retardant)
AB	ES with locking magnet : AC48V	AP	ES(Earthing switch) with making
AC	ES with locking magnet : AC110V	AZ	Maunal charging

Note) 1. In case of E/F type, only 12kV, 210mm(B,Q) are available.
2. In case of H type,
- Aa is for compartment W600.
- Aq is for compartment W550.
- Pa is for compartment W600.(Tulip type)
- Pq is for compartment W550.(Tulip type)
3. In case of Aq, Pq cradle, only 7.2/12kV are available

Note) 1. Accessories and TM for the cradle apply only to H type.
2. AJ and AK apply only when the door (AH) is present.
3. TM is for use with AL in H type cradle.
4. H type lead wire - one of AM, AN or AO is required for cradle in case of H type breaker.
5. Unable to install AK at the cradle if A8, A9 is present in the H type breaker
6. A1 is selected, A5 is included as standard.



< E type cradle >



< F type cradle >

Structure

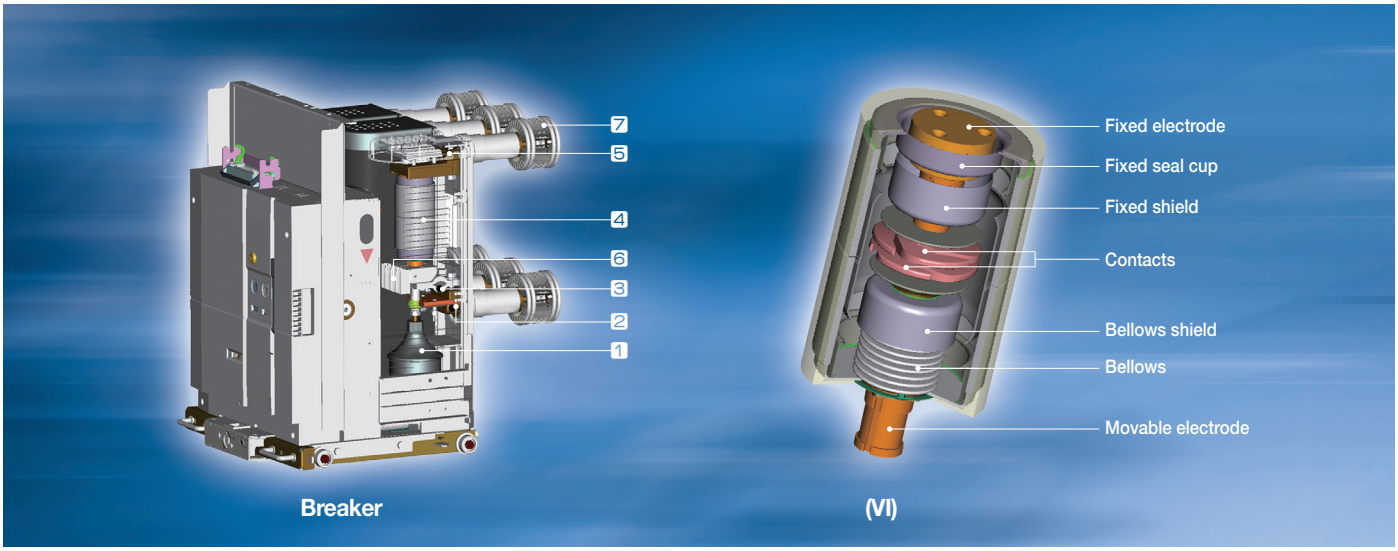

Breaker

1 Insulation rod
2 Lower terminal
3 Flexible shunt
4 Vacuum interrupter
5 Upper terminal
6 Heat sink, 2000A or more
7 Tulip contactor

Vacuum Interrupter, VI

The internal components of a typical Vacuum Interrupter are shown in the Fig.
LS Vacuum Interrupter consists of a ceramic insulator, two end plates, arc shield, bellows, a movable and fixed electrode, and contact set.
The ambient gas pressure within the evacuated tube is approximately 5×10^{-5} torr.

Accessories

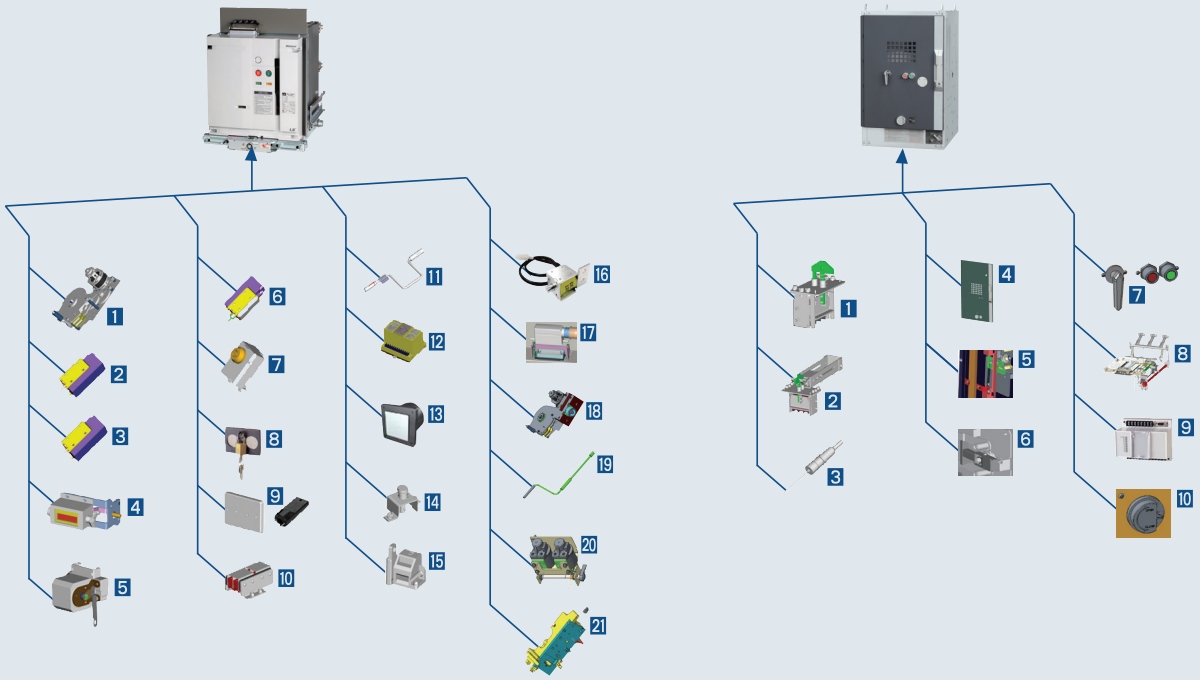

Breaker

1 Motor(M), Charge switch
2 Closing coil(C)
3 Trip coil(TC)/Secondary Trip coil(TC1)
4 Counter
5 Auxiliary contact(SA)
6 UVT
7 Keylock
8 Button padlock
9 Button cover
10 Position switch
11 Handle for draw-in and out
12 UVT time delay controller
13 CTD
14 MOC
15 Padlock(H type door interlock)
16 Locking magnet
17 Plug interlock
18 Manual charging geared ass'y
19 Manual charging handle
20 CTC
21 LETD

Cradle

1 TOC(Truck operating cell S/W)
2 MOC(Mechanism operating cell S/W)
3 Temperature sensor
4 Door
5 Door interlock
6 Shutter padlock
7 Emergency On/Off button
8 Earthing S/W & Accessary
8-1 Keylock-earthing S/W
8-2 Locking magnet-earthing S/W
8-3 Position S/W-earthing S/W
9 TM(Temperature monitoring unit)
10 Manual charging geared ass'y

Accessories

No	Designation	Division	Shape	Division	Remarks
1	Geared motor	Basic		VL common	Rating division: DC 24V, 48V, 110V 125V, 220V AC 48V, 110V, 220V
2	Closing coil	Basic	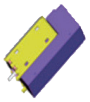	VL common	Rating division: DC 24V, 48V, 110V 125V, 220V AC 48V, 110V, 220V
3	Opening coil	Basic	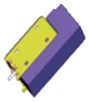	VL common	Rating division: DC 24V, 48V, 110V 125V, 220V AC 48V, 110V, 220V
4	Auxiliary contact	Basic		New development	4a4b, 10a10b
5	UVT	Option (Breaker)	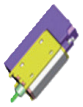	VL common	Rating division: DC 24V, 48V, 110V 125V, 220V AC 48V, 110V, 220V
6	Additional opening coil	Option (Breaker)	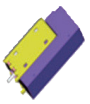	VL common	Rating division: DC 24V, 48V, 110V 125V, 220V AC 48V, 110V, 220V
7	Position S/W (H type)	Option (Breaker)		VL common	Test/Run: 2a2a, 2a2b
8	Keylock	Option (Breaker)		ACB common	
9	Button padlock	Option (Breaker)		VL common	
10	Button cover	Option (Breaker)		VL common	
11	Plug interlock	Option (Breaker/ Cradle)	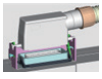	VL common	
12	Padlock (H type door interlock)	Option (Breaker)		VL common	
13	Manual charging geared ass'y	Option (Breaker)	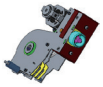	VL common	Rating division: DC 24V, 48V, 110V 125V, 220V AC 48V, 110V, 220V
14	CTC	Option (Breaker)		New development	1A, 5A
15	LETD	Option (Breaker)	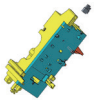	VL common	25mJ
16	Manual charging geared ass'y	Option (Cradle)		New development	

No	Designation	Division	Shape	Division	Remarks
17	MOC	Option (Breaker)			
18	TOC	Option (Cradle)		VL common	
19	MOC	Option (Cradle)		New development	
20	Temperature sensor	Option (Cradle)		VL common	
21	Earthing S/W & accessary	Option (Cradle)		New development	
22	Shutter padlock	Option (Cradle)		VL common	
23	Door emergence push button	Option (Cradle)		New development	
24	Door	Option (Cradle)		New development	
25	Door interlock	Option (Cradle)		New development	
26	CTD	Others		VL common	
27	UVT time delay controller	Others		VL common	
28	Drawout handle	Others	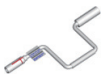	VL common	
29	Temperature monitoring unit (TM)	Others		New development	
30	Lift	Others		New development	
31	Manual charging handle	Others		VL common	

Control circuit diagram

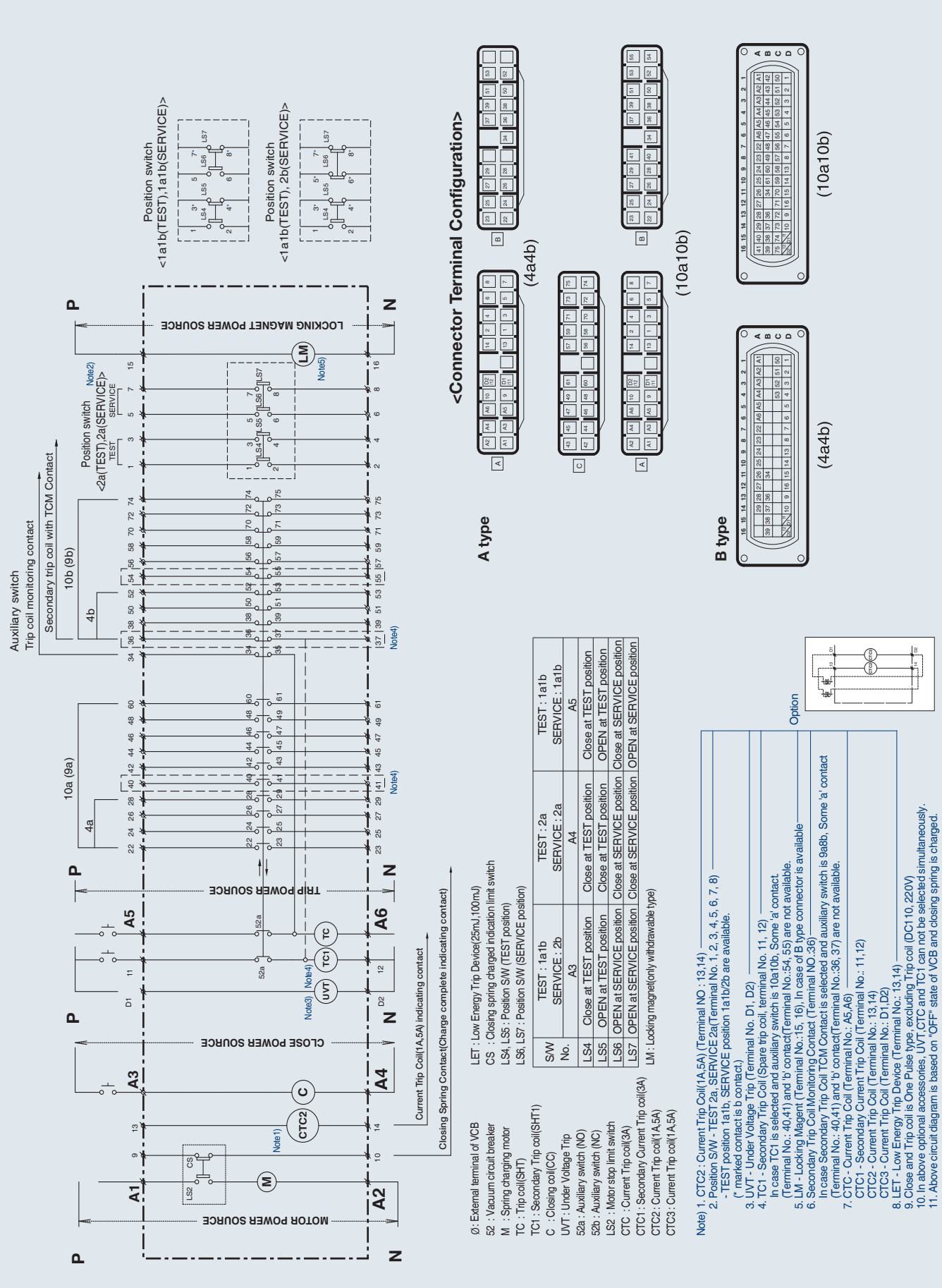

Ø: External terminal of VCB
52 : Vacuum circuit breaker
M : Spring charging motor
TC : Trip coil(SHT)
TC1 : Secondary Trip coil(SHT1)
C : Closing coil(CC)
UVT : Under Voltage Trip
52a : Auxiliary switch (NO)
52b : Auxiliary switch (NC)
LS2 : Motor stop limit switch
CTC : Current Trip coil(3A)
CTC1 : Secondary Current Trip coil(3A)
CTC2 : Current Trip coil(1A,5A)
CTC3 : Current Trip coil(1A,5A)

LET : Low Energy Trip Device(25mJ,100mJ)
CS : Closing spring charged indication limit switch
LS4, LS5 : Position S/W (TEST position)
LS6, LS7 : Position S/W (SERVICE position)

S/W No.	TEST : 1a1b SERVICE : 2b A3	TEST : 2a SERVICE : 2a A4	TEST : 1a1b SERVICE : 1a1b A5
LS4	Close at TEST position	Close at TEST position	Close at TEST position
LS5	OPEN at TEST position	Close at TEST position	OPEN at TEST position
LS6	OPEN at SERVICE position	Close at SERVICE position	Close at SERVICE position
LS7	OPEN at SERVICE position	Close at SERVICE position	OPEN at SERVICE position

LM : Locking magnet(only withdrawable type)

Option

Note) 1. CTC2 : Current Trip Coil(1A,5A) (Terminal NO : 13,14)
2. Position S/W - TEST 2a, SERVICE 2a(Terminal No. 1, 2, 3, 4, 5, 6, 7, 8)
- TEST position 1a1b, SERVICE position 1a1b/2b are available.
(* marked contact is b contact.)
3. UVT - Under Voltage Trip (Terminal No. D1, D2)
4. TC1 - Secondary Trip Coil (Spare trip coil, terminal No. 11, 12)
In case TC1 is selected and auxiliary switch is 10a10b, Some 'a' contact (Terminal No.: 40,41) and 'b' contact(Terminal No.:54, 55) are not available.
5. LM - Locking Magent (Terminal No.:15, 16), In case of B type connector is available
6. Secondary Trip Coil Monitoring Contact (Terminal NO.:36)
In case Secondary Trip Coil TCM Contact is selected and auxiliary switch is 9a8b, Some 'a' contact (Terminal No.: 40,41) and 'b' contact(Terminal No.:36, 37) are not available.
7. CTC - Current Trip Coil (Terminal No.: A5,A6)
CTC1 - Secondary Current Trip Coil (Terminal No.: 11,12)
CTC2 - Current Trip Coil (Terminal No.: 13,14)
CTC3 - Current Trip Coil (Terminal No.: D1,D2)
8. LET - Low Energy Trip Device (Terminal No.: 13,14)
9. Close and Trip coil is One Pulse type, excluding Trip coil (DC110, 220V)
10. In above optional accessories, UVT,CTC and TC1 can not be selected simultaneously.
11. Above circuit diagram is based on "OFF" state of VCB and closing spring is charged.

Dimensions

7.2kV 20, 25, 31.5kA 630, 1250A
12kV 16, 20, 25kA 630, 1000, 1250A
12kV 31.5kA 630, 1250A
(P type, Phase: 150mm)

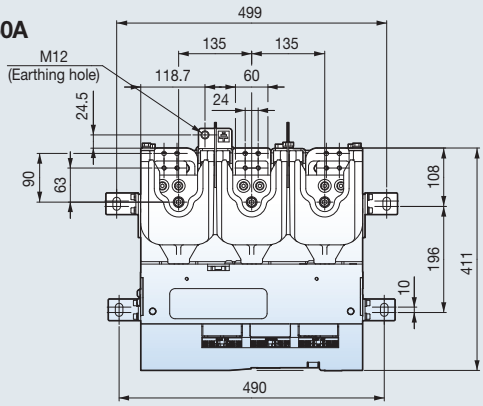

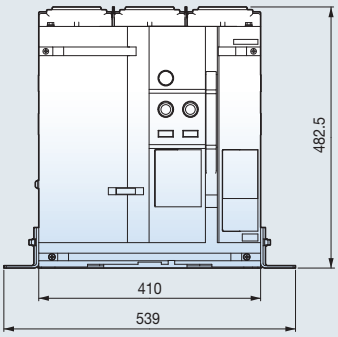

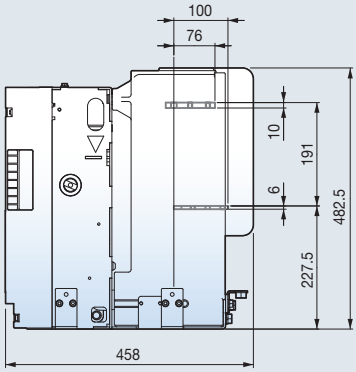

17.5kV 16, 20, 25kA 630, 1000, 1250A
17.5kV 31.5kA 630, 1250A
(P type, Phase: 150mm)

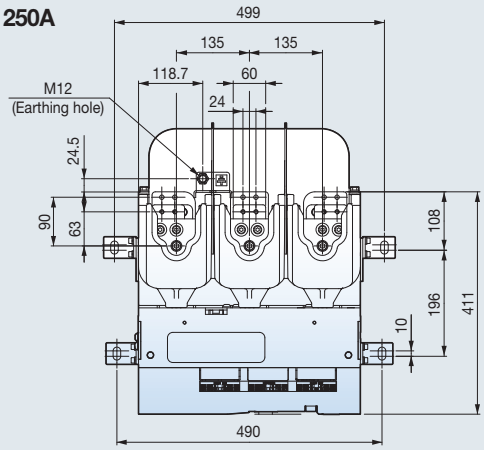

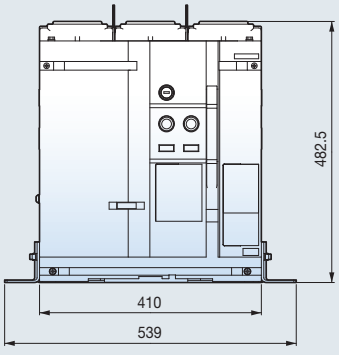

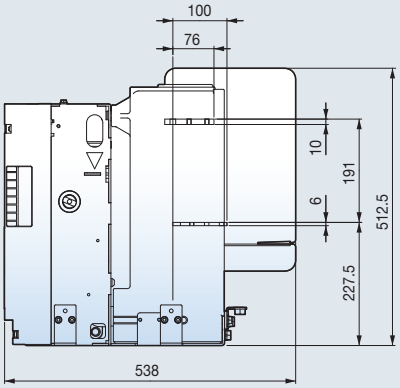

Dimensions

12kV 20, 25kA 630A
(E type, Clip, Phase: 210mm)

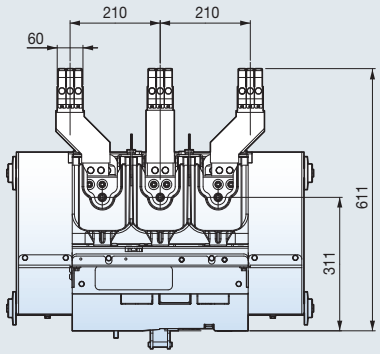

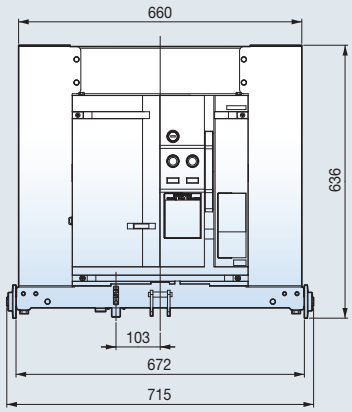

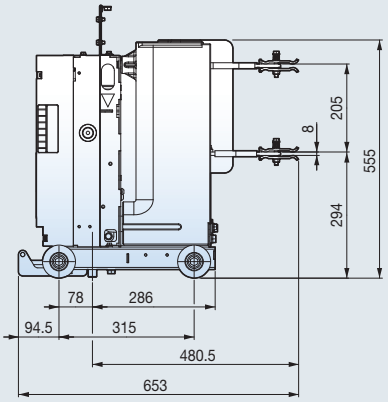

12kV 20, 25kA 1250A
(E type, Clip, Phase: 210mm)

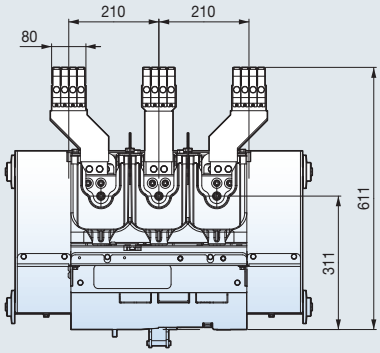

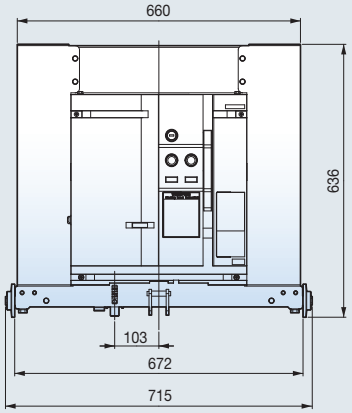

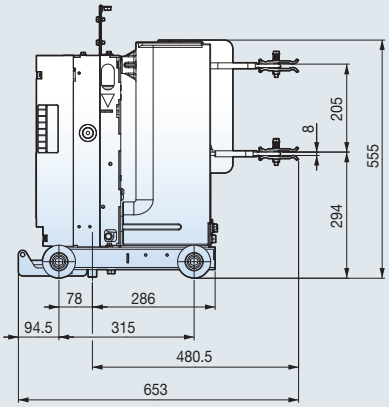

12kV 20, 25kA 630, 1250A
(E type, Tulip, Phase: 210mm)

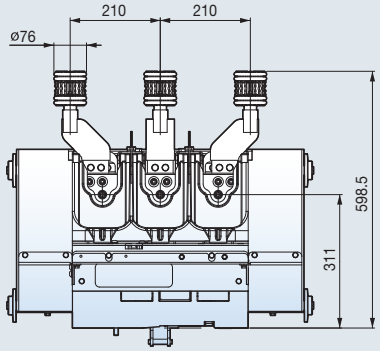

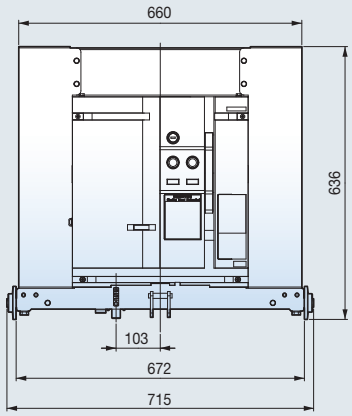

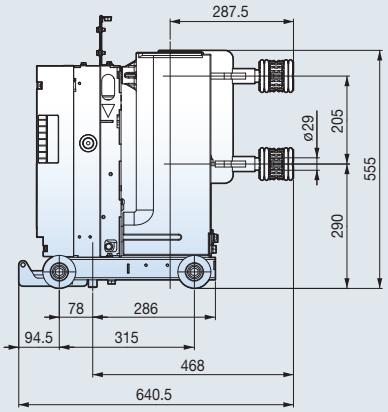

12kV 20, 25kA 630A
(F type, Clip, Phase: 210mm)

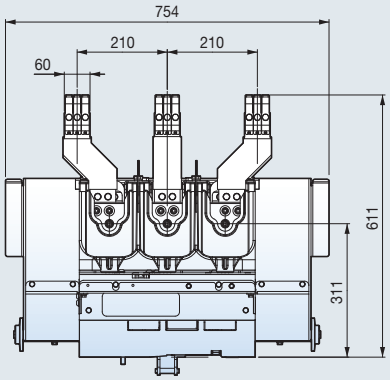

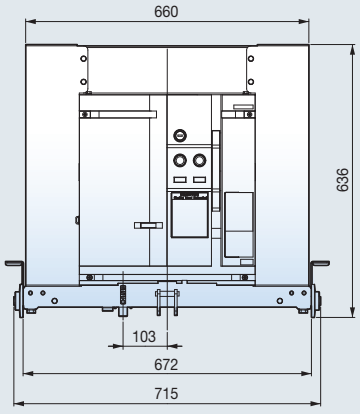

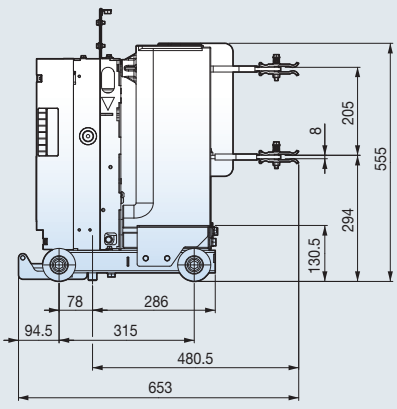

Dimensions

12kV 20, 25kA 1250A
(F type, Clip, Phase: 210mm)

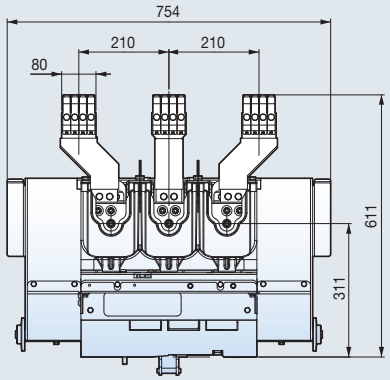

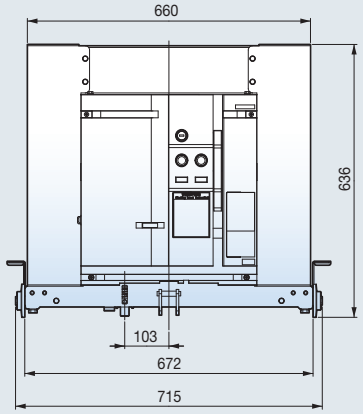

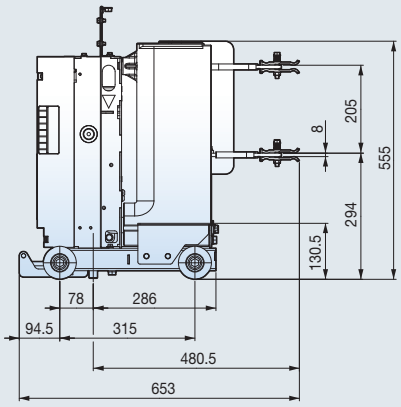

12kV 20, 25kA 630, 1250A
(F type, Tulip, Phase: 210mm)

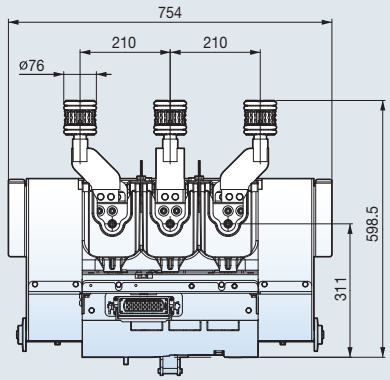

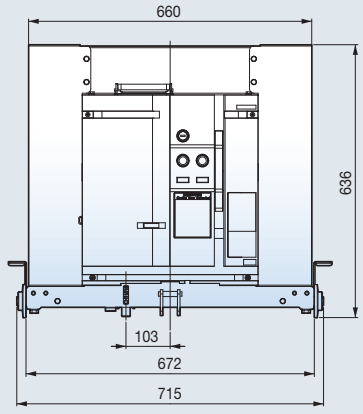

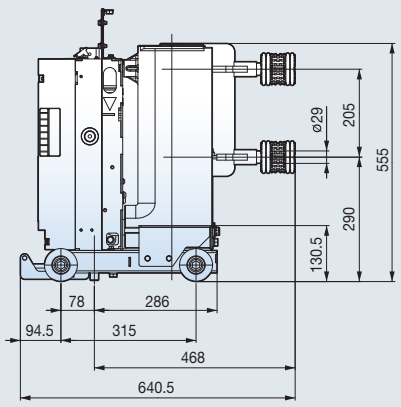

7.2kV 20, 25kA 630A
12, 17.5kV 16, 20, 25kA 630, 1000A
(H type, Clip, Phase: 150mm)

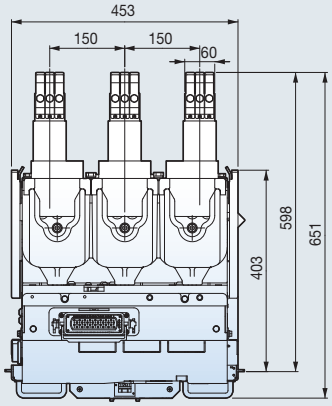

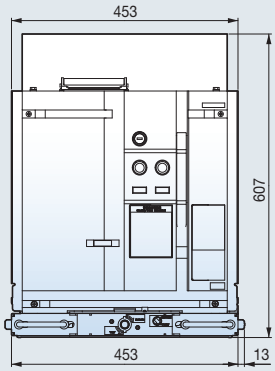

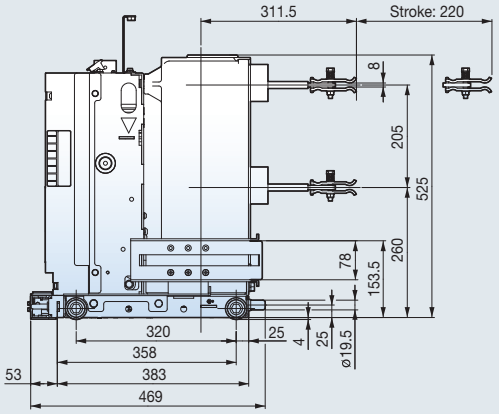

7.2kV 20, 25kA 1250A
12, 17.5kV 16, 20, 25kA 1250A
(H type, Clip, Phase: 150mm)

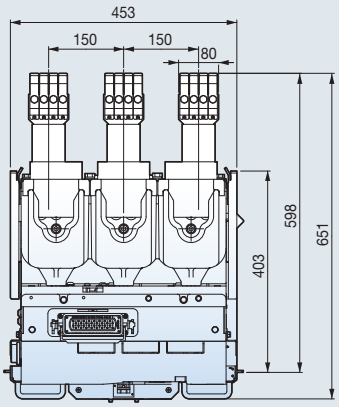

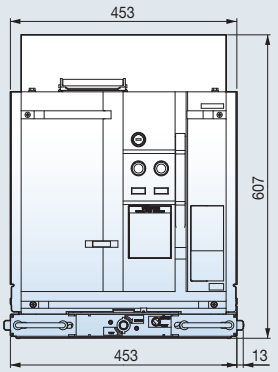

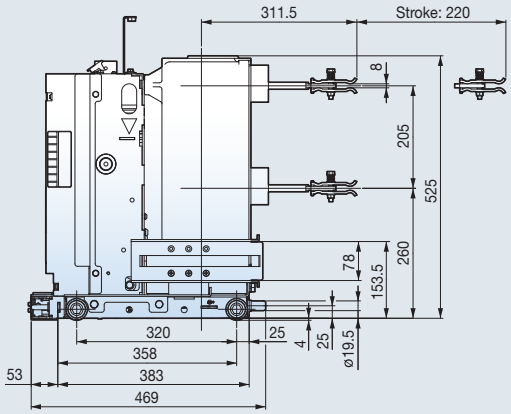

Dimensions (VCB)

7.2kV 20, 25, 31.5kA 630, 1250A
12, 17.5kV 16, 20, 25kA
630, 1000, 1250A
12, 17.5kV 31.5kA 630, 1250A
(H type, Tulip, Phase: 150mm)

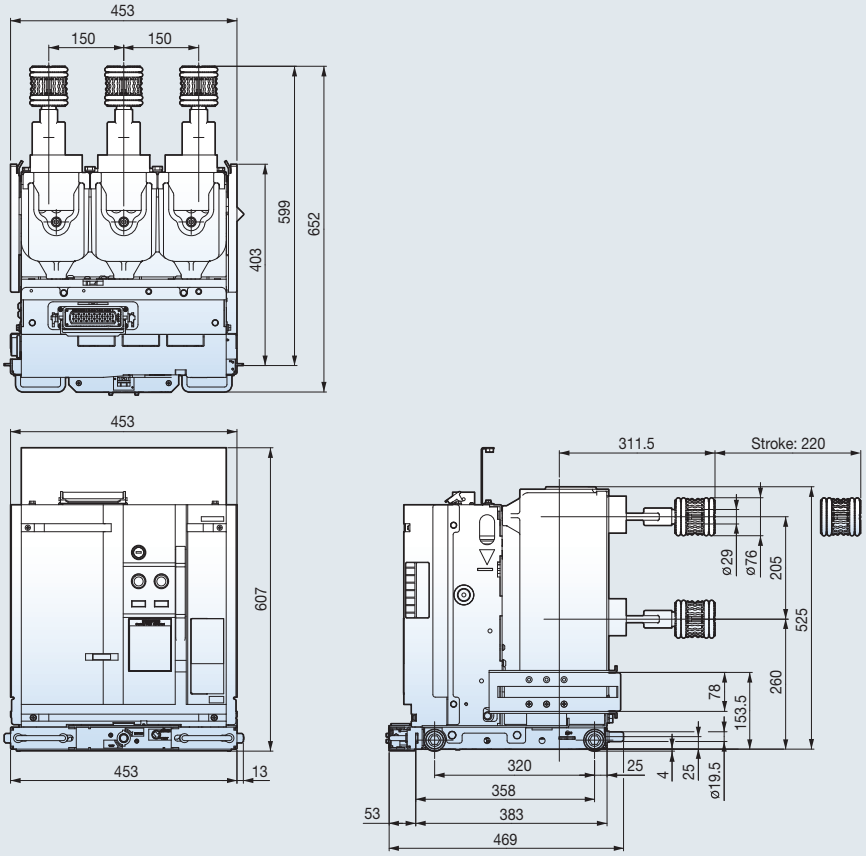

12kV 20, 25kA 630, 1000, 1250A
(H compatible type, Phase: 150mm)

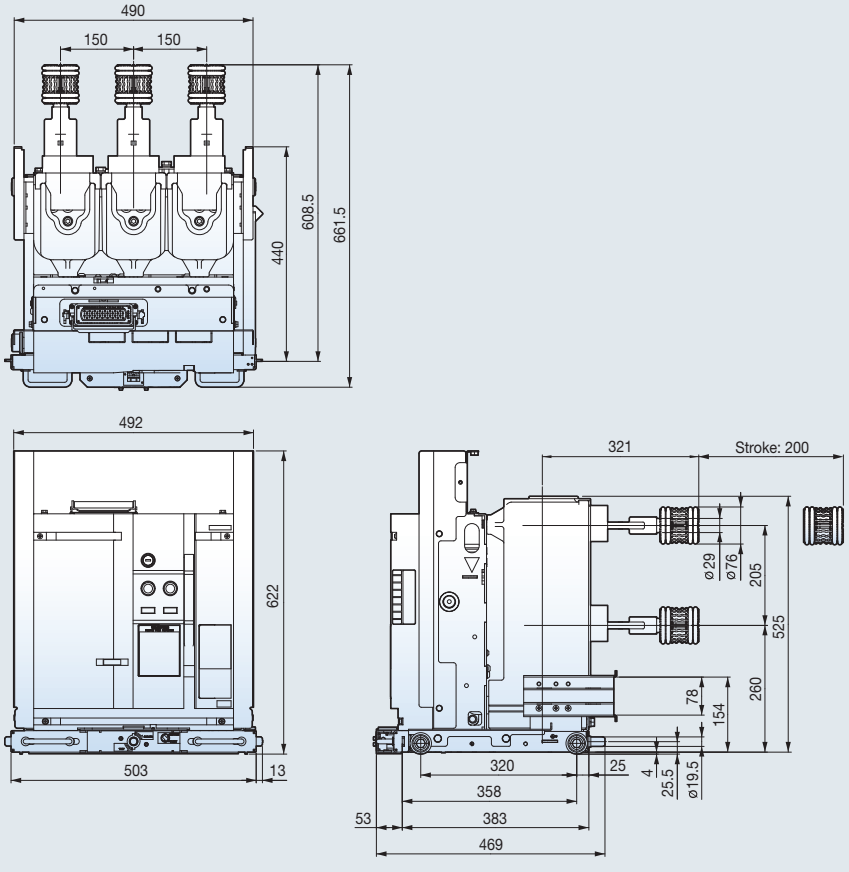

7.2kV 20, 25, 31.5kA 630, 1250A
12, 17.5kV 16, 20, 25, 31.5kA
630, 1000, 1250A
(Box type, Phase: 150mm)

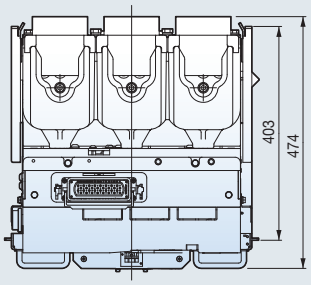

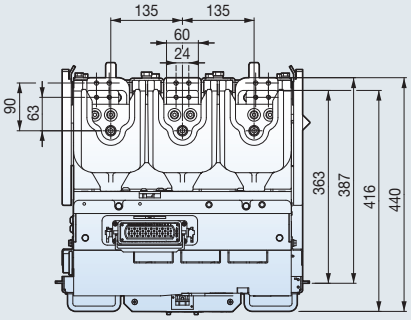

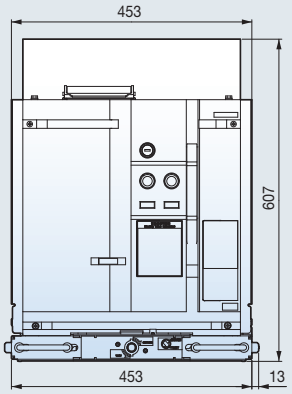

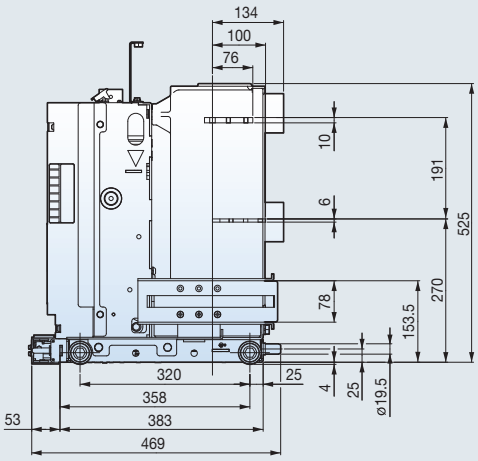

Dimensions (Cradle)

12kV 20, 25kA 630A
(E type cradle, Clip, Phase: 210mm)

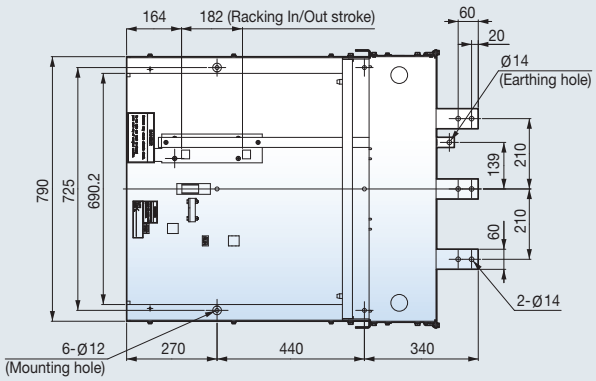

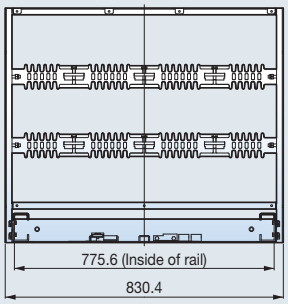

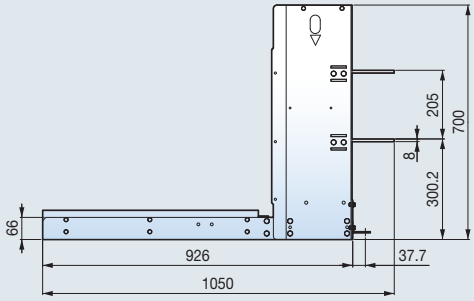

12kV 20, 25kA 1250A
(E type cradle, Clip, Phase: 210mm)

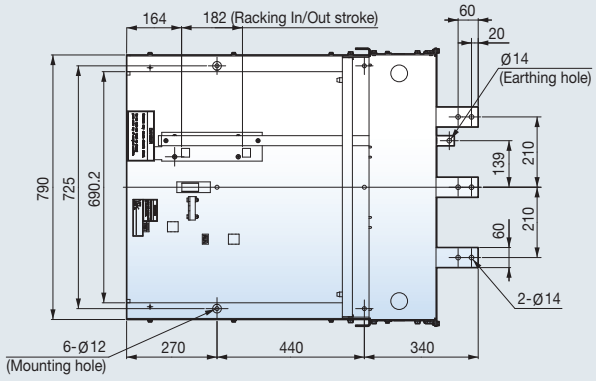

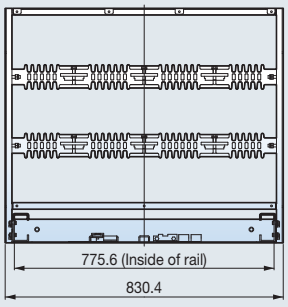

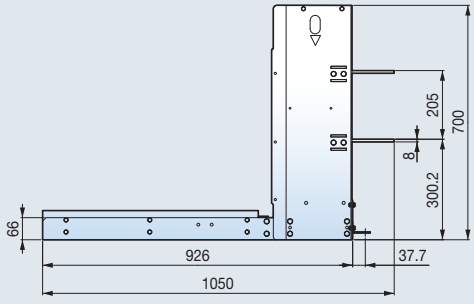

12kV 20, 25kA 630, 1250A
(E type cradle, Tulip, Phase: 210mm)

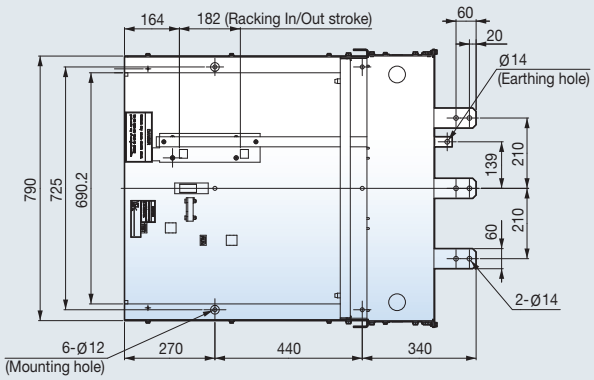

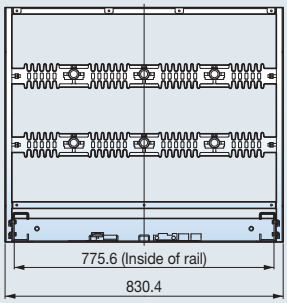

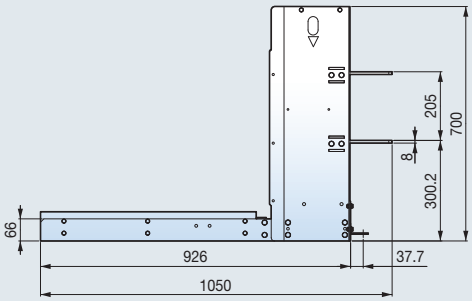

12kV 20, 25kA 630A
(F type cradle, Clip, Phase: 210mm)

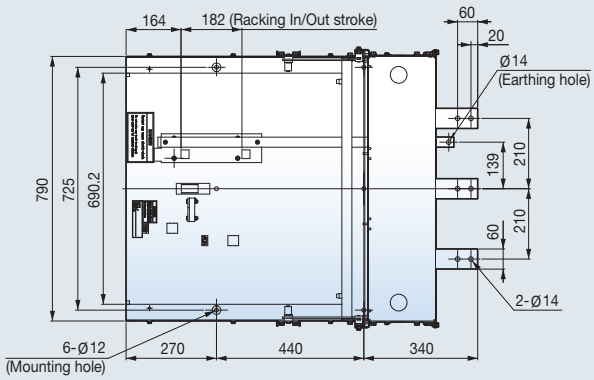

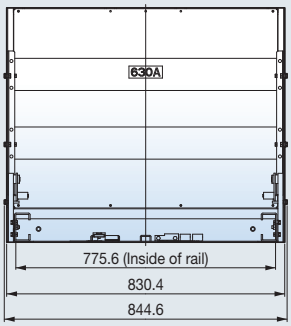

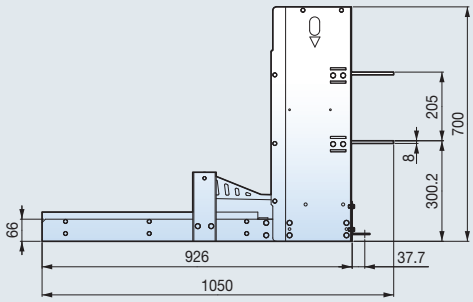

Dimensions (Cradle)

12kV 20, 25kA 1250A
(F type cradle, Clip, Phase: 210mm)

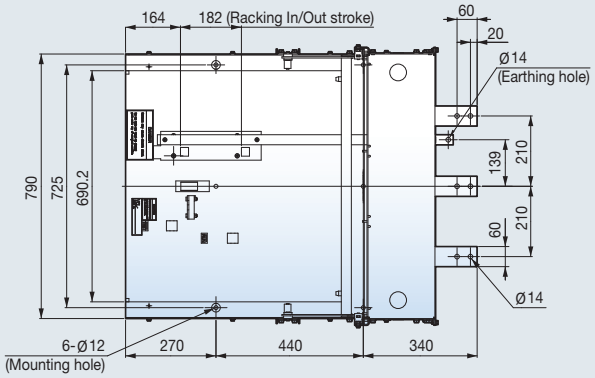

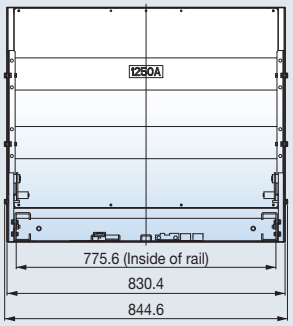

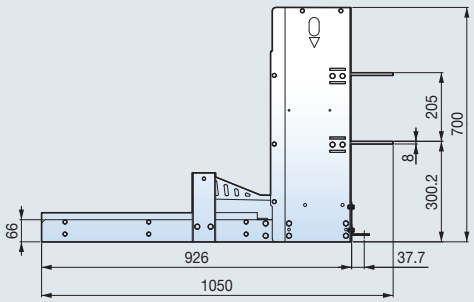

12kV 20, 25kA 630, 1250A
(F type cradle, Tulip, Phase: 210mm)

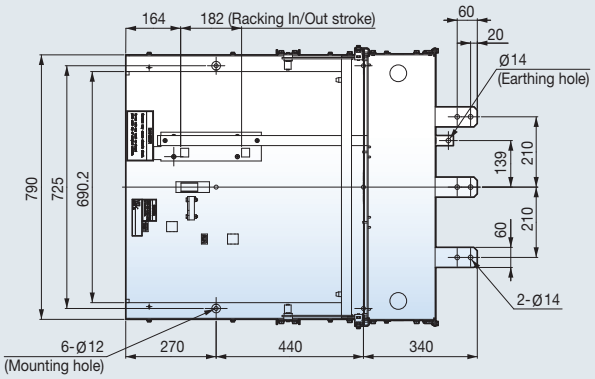

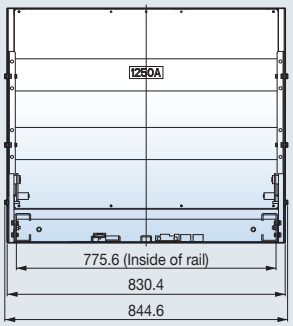

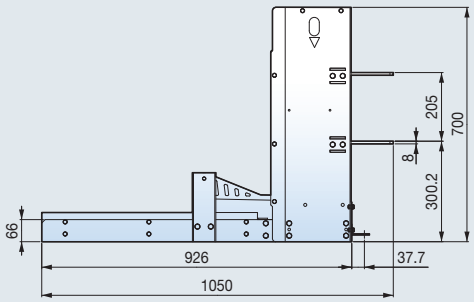

7.2, 12kV 16, 20, 25, 31.5kA 630, 1000, 1250A
(H type cradle, Clip, W: 550mm Phase: 150mm)

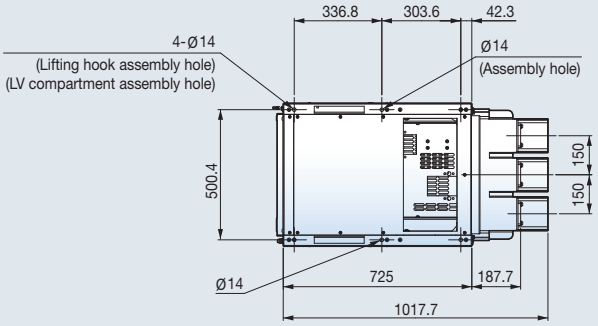

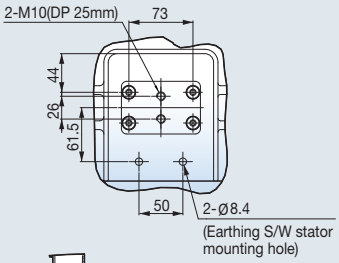

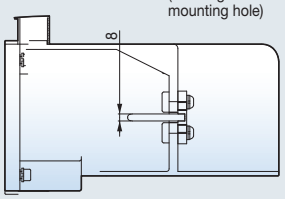

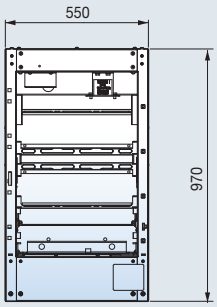

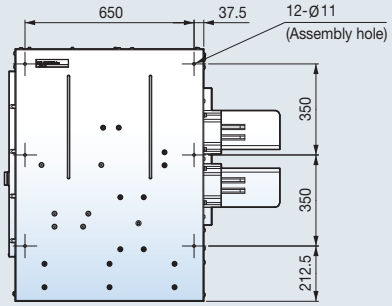

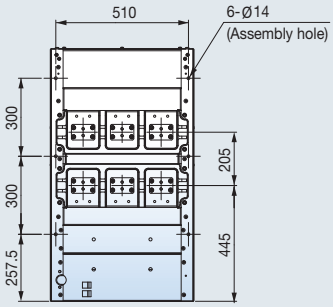

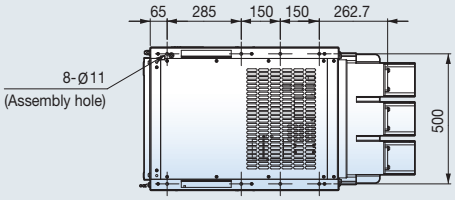

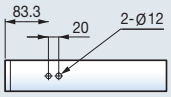

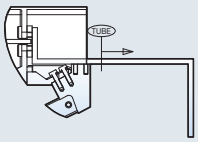

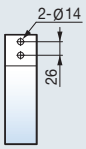

Busbar spec
630A: 40×10t
1000/1250A: 60×12t

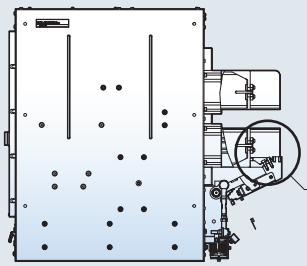

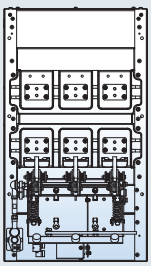

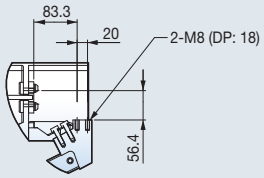

DETAIL A

Dimensions (Cradle)

7.2, 12kV 16, 20, 25, 31.5kA 630, 1000, 1250A
(H type cradle, Tulip, W: 550mm Phase: 150mm)

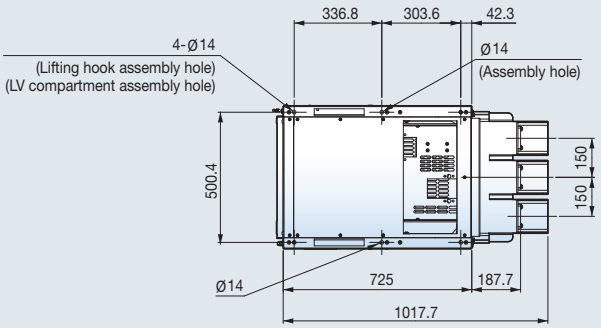

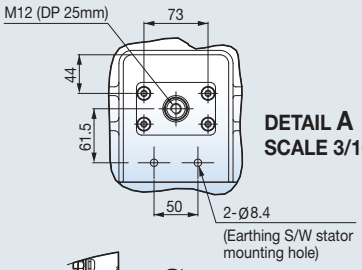

DETAIL A
SCALE 3/10

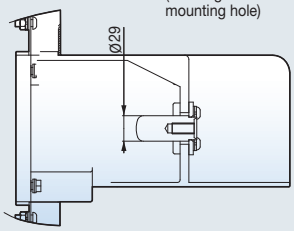

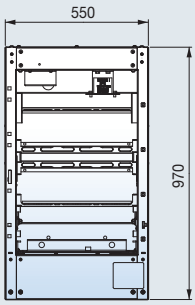

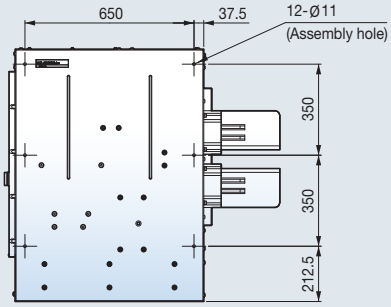

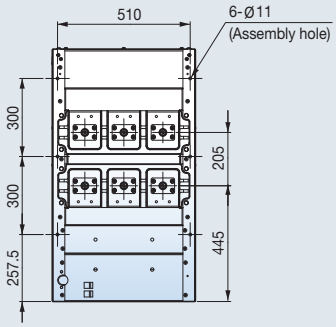

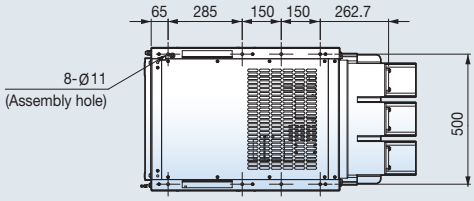

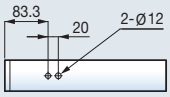

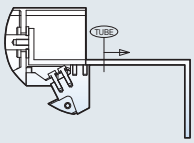

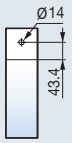

Busbar spec
630A: 40×10t
1000/1250A: 60×12t

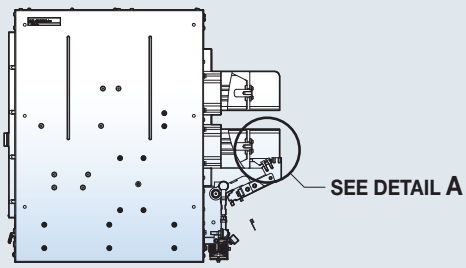

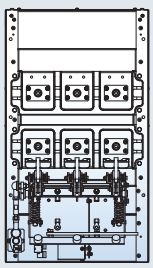

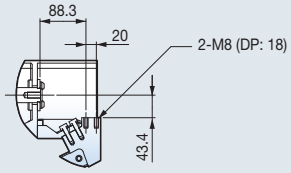

DETAIL A

7.2, 12, 17.5kV 16, 20, 25, 31.5kA 630, 1000, 1250A
(H type cradle, Clip, W: 600mm Phase: 150mm)

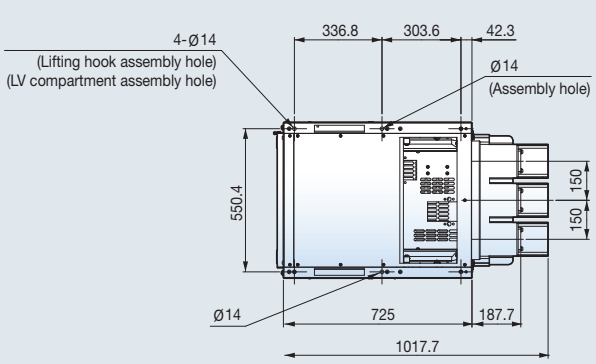

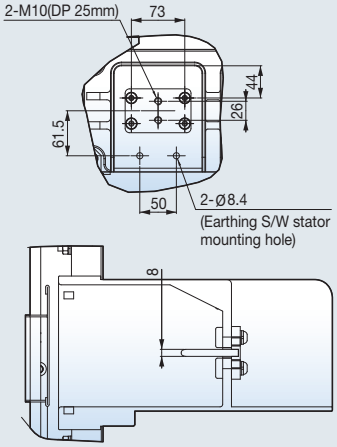

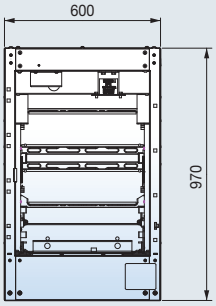

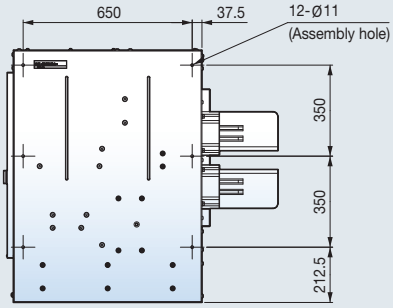

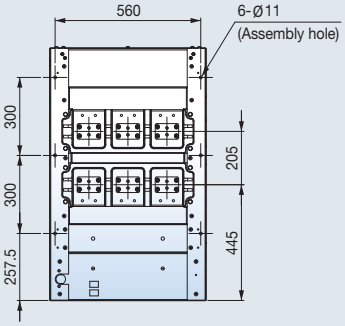

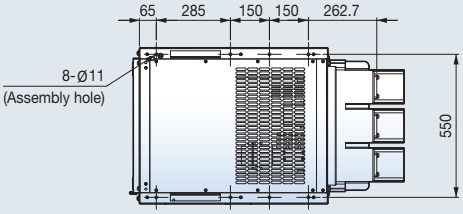

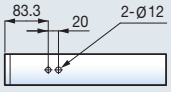

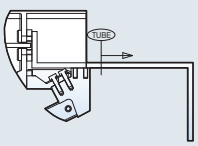

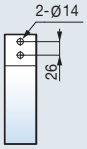

Busbar spec
630A: 40×10t
1000/1250A: 60×12t

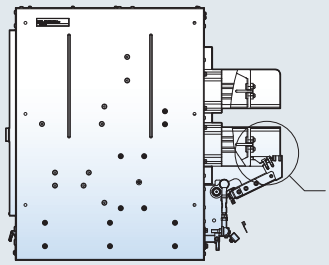

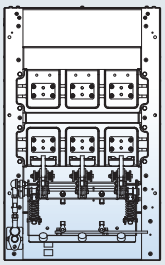

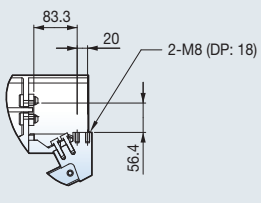

DETAIL A

Dimensions (Cradle)

7.2, 12, 17.5kV 16, 20, 25, 31.5kA 630, 1000, 1250A
(H type cradle, Tulip, W: 600mm Phase: 150mm)

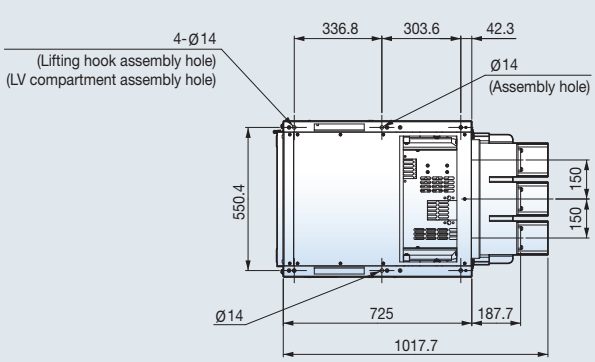

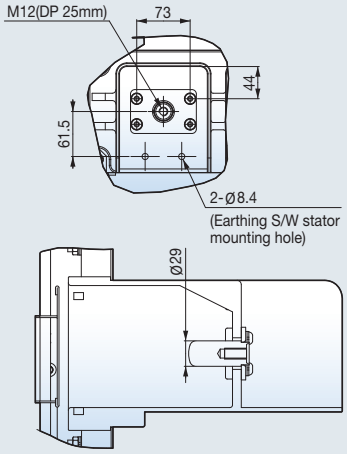

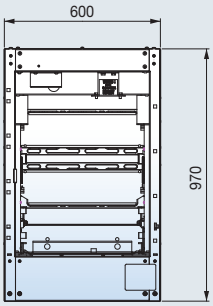

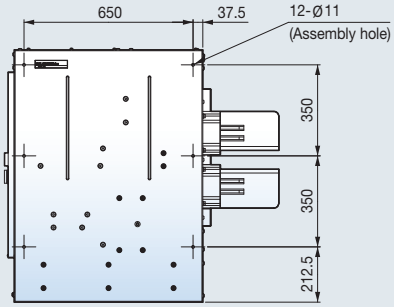

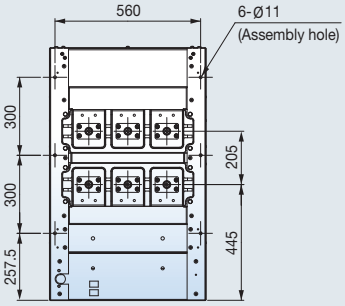

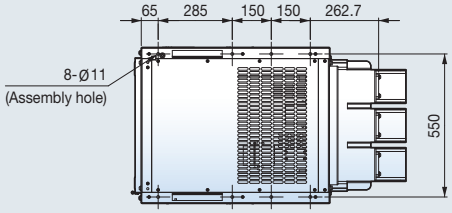

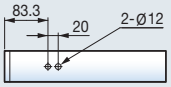

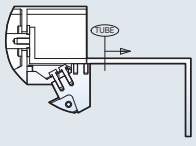

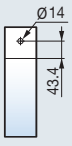

Busbar spec
630A: 40×10t
1000/1250A: 60×12t

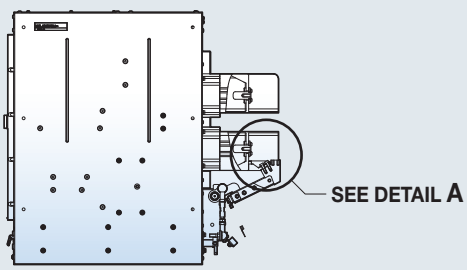

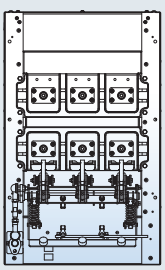

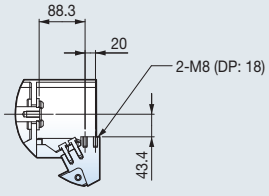

DETAIL A

DIGITAL SUPPORT HUB

SCAN THE QR CODE FOR INSTANT PRODUCT INFORMATION AND EXPERT SUPPORT



LSE LENS
One Scan,
More Materials
Scan the QR code to instantly access product materials

Product Finder
Search Smarter.
Find Faster
Quickly discover the best-fit product for your needs

Download Center
Download with
Ease and Speed
Instantly access datasheets, manuals, and CAD files

Tech Hub-Youtube
Expert Guidance,
Now on YouTube
Watch trusted tutorials and product guides from real experts

Headquarter
127 LS-ro (Hogye-dong) Dongan-gu, Anyang-si, Gyeonggi-Do, 14119, Korea

Seoul Office
LS Yongsan Tower, 92, Hangang-daero, Yongsan-gu, Seoul, 04386, Korea
TEL: 82-2-2034-4916, 4684, 4429

C/Montcada 7, Pol. Ind. Les Pereres
08130 Santa Perpètua de Mogoda
Barcelona - Spain

Tel. +34 935 748 206
info@vectorenergy.com
www.vectorenergy.com

Specifications in this catalog are subject to change without notice due to continuous product development and improvement

© 2019. 03 LS ELECTRIC Co., Ltd. All rights reserved. / English (03) 2022. 12 Staffcom