

Beyond X™

LSLV-S300

High-Performance Drive



vector Energy

LS ELECTRIC

Contents

4 S300 Features
10 Models and Types
12 Input/Output Specifications
15 Product Details/Structure and Operating Environment
17 Wiring Diagram
18 Main Circuit Terminals
20 Control Terminal Block
23 How to Use the Smart LCD Operator
26 Peripheral Devices
27 External Dimensions (IP20 Type)
32 AC Input Fuse and Reactor Specifications
33 Braking Unit
34 Terminal Arrangement for the Braking Unit
35 Basic wiring diagram for braking unit and braking resistor
36 Braking Resistor Specifications



High-Performance Drive

S300

new

Expect more with even stronger performance!

Experience the incomparable, high-quality performance of the LS high-performance S300 series

GOOD DESIGN
Ministry of Trade, Industry and Energy Selection

c UL us CE KC RoHS









Strong Performance

- Improved V/F and sensorless control performance
- Enhanced motor control performance

Space Efficient Design

- 10-40% reduction in size by capacity
- Built-in DC Reactor and EMC Filter for all capacities

Predictive Maintenance

- Predicts and assesses lifespan for the main cap, fan, and relay
- Gold plate PCB and hole-plugging applied

Suitable for Users

- Smart LCD Operator
- Easy user sequence creation

Strong Performance

The S300 is a drive with enhanced V/F, sensorless, and vector control.

V/F starting torque performance data

Yellow: DC link, Red: Frequency, Blue: Torque, Green: Output current

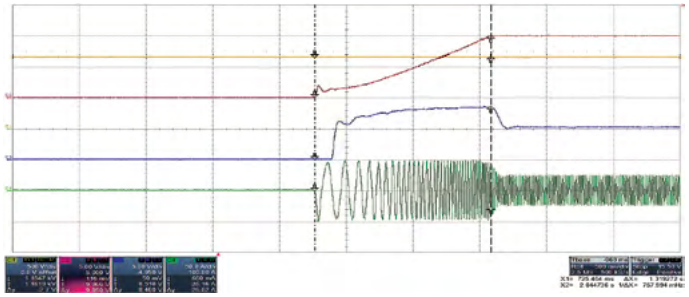

• Test Conditions : Torque Load 50Nm, Target Speed 60Hz, Accel Time 0 Sec.
⇨ Time to reach Target Speed : 1.3 Sec.

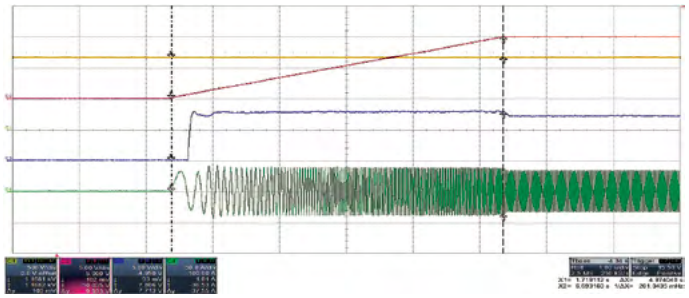

• Test Conditions : Torque Load 70Nm, Target Speed 60Hz, Accel Time 5 Sec., Torque Boost 4% ⇨ Time to reach Target Speed : 5 Sec.

※ Based on a 7.5 kW, 400 V class

Enhanced motor control performance

- Improved low-speed, sensorless control performance with a speed control range of 1:200. (A ratio of 1:200 indicates the ability to regulate speed down to 1/200 of the rated speed.)
- Enhanced sensorless low-speed torque control
- Improved PID function

Enhanced sensorless control performance

- Achievement of high starting torque at 200%/0.5 Hz
- Powerful motor control in low-speed areas

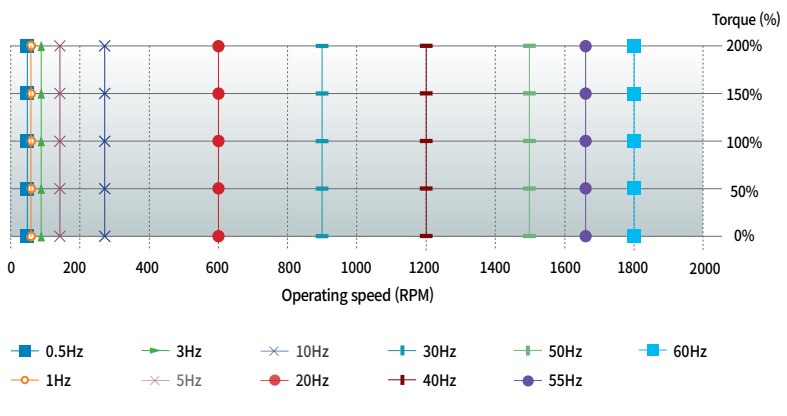



Enhanced 2nd motor function

- Ability to drive identically with the main motor (Induction motors and synchronous motors can be controlled without sensors using the sensorless 2nd motor)

Control for synchronous motors

- PM Motor
- SynRM(Synchronous Reluctance Motor)

Compliance with safety standards (Built-in safe torque off feature)

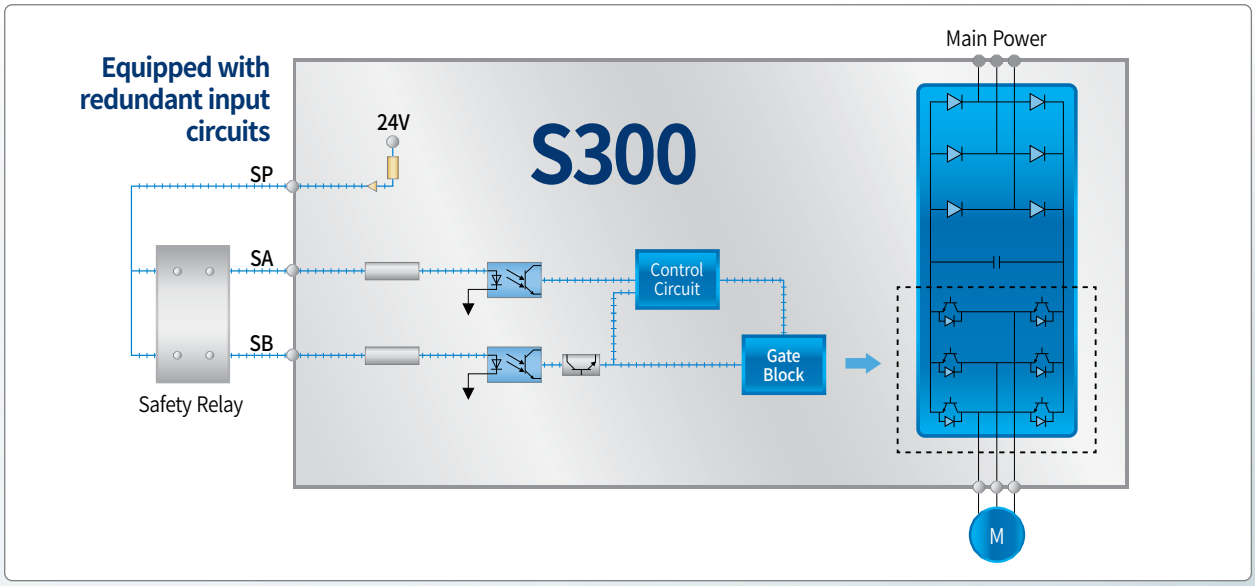

※ Safety relay sold separately
※ Safety relay is not the scope of supply of LS ELECTRIC

Space Efficient Design

The S300 maximizes space efficiency within panels.



Size Reduction Maximum 40%

Significantly reduced size

- Optimal placement of internal components through heat analysis and 3D design
- Size reduced by up to 40% compared to the iS7



Built-in DC reactor

- Built-in DC reactor for all capacities, effective for improving the power factor and reducing the total harmonic distortion (THD)

Built-in EMC filter

- Built-in EMC filter for all capacities to meet noise reduction regulations
- 2nd Environment (EN61800-3)/Category C3 (Class A)
  - CE certified

Built-in safety torque off (STO)

Built-in 24 V control power supply

Predictive Maintenance

The S300 is enhanced with diagnostic and predictive maintenance capabilities.



Operation time monitor

Allows monitoring of the S300's operation time and fan operation time.

Enhanced diagnostic and predictive maintenance

- Provides state diagnostics for main capacitors, fans, and relays (with warning alarm settings)



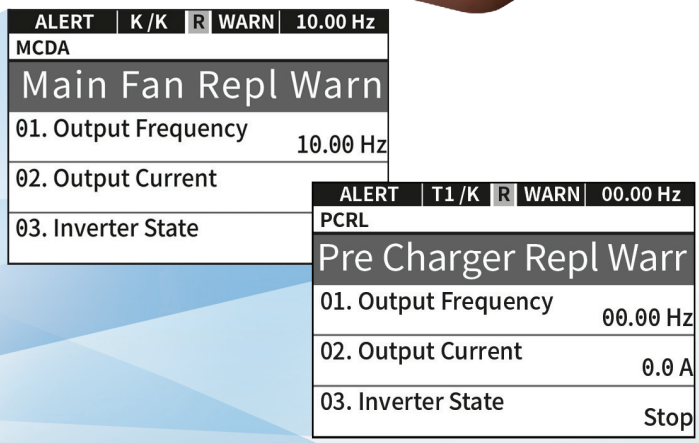

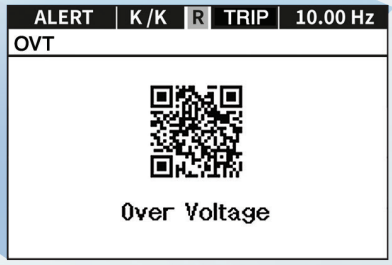

- QR code for checking trip details

Suitable for Users

The S300 is a high-performance drive with enhanced, user-friendly features.



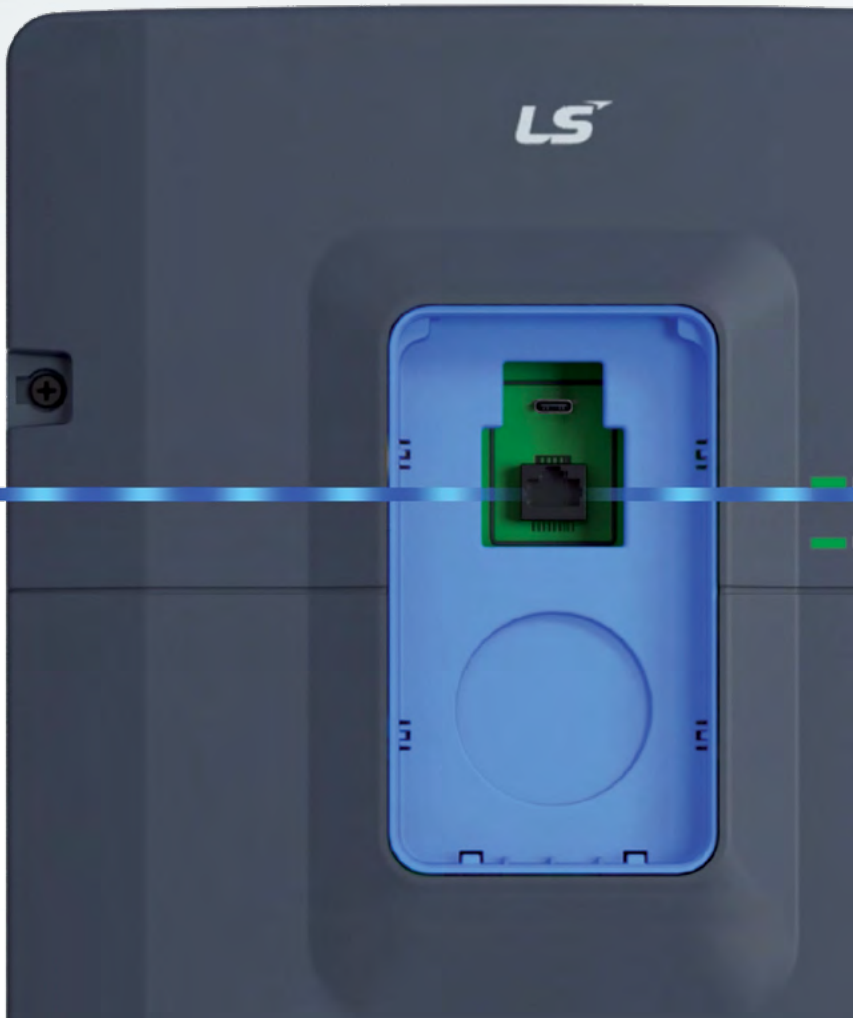

Smart LCD Operator

- High resolution 4 Gray LCD
- Multilingual
  (Korean, English, and five other languages)
- USB support
  - Up to 20 SLO parameters read/write capability
  - Ability to copy saved parameters to a PC
- RTC (Real Time Clock) Fuction

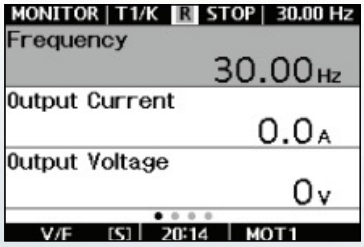

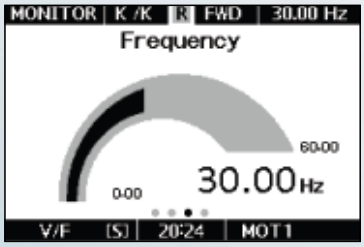

Advanced User Sequence

Allows for the creation of simple sequences using various function block combinations with DriveView9, without having to modify the software.

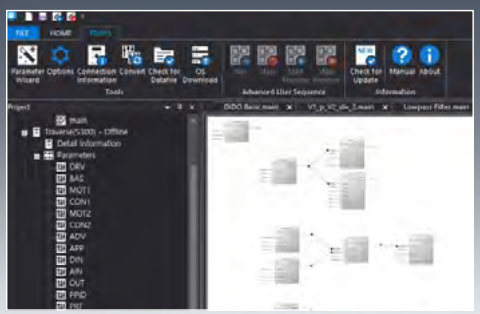



Option Cards

Communication options

- RAPIEnet+ (RAPIEnet, EtherNet/IP, Modbus TCP, PROFINET)

Encoder options

- Pulse Open Collector Encoder (15V / 24V)
- Pulse Line Drive Encoder (5V / 12V)

I/O expansion option card

- Output relays: Two points (NO/NC selectable)
- Digital inputs: Three points (NPN/PNP selectable)
- Analog input/output: Two points/One point

PC Interface

- FBD (Function Block Diagram)
- Simple Scope (monitoring function)
- Firmware Download

Firmware Upgrade Capability

- Capable of upgrading keypad and control board firmware with DriveView 9.

Conduit Kit Option

- Acquired UL open type and enclosed type1 specifications.



Flange Option

- Allows for the installation of the heat sink outside the panel when installation space is limited.



※ Standard models shipped as UL Open Type
※ Installing the conduit kit (optional) meets the UL enclosed type1 standards.

Models and Types

Motor Rating	200V Class		400V Class	
	Normal Duty	Heavy Duty	Normal Duty	Heavy Duty
0.4kW	LSLV0004S300-2COFD	LSLV0004S300-2COFD	LSLV0004S300-4COFD	LSLV0004S300-4COFD
0.75kW	LSLV0004S300-2COFD	LSLV0008S300-2COFD	LSLV0004S300-4COFD	LSLV0008S300-4COFD
1.5kW	LSLV0008S300-2COFD	LSLV0015S300-2COFD	LSLV0008S300-4COFD	LSLV0015S300-4COFD
2.2kW	LSLV0015S300-2COFD	LSLV0022S300-2COFD	LSLV0015S300-4COFD	LSLV0022S300-4COFD
4kW	LSLV0022S300-2COFD	LSLV0040S300-2COFD	LSLV0022S300-4COFD	LSLV0040S300-4COFD
5.5kW	LSLV0040S300-2COFD	LSLV0055S300-2COFD	LSLV0040S300-4COFD	LSLV0055S300-4COFD
7.5kW	LSLV0055S300-2COFD	LSLV0075S300-2COFD	LSLV0055S300-4COFD	LSLV0075S300-4COFD
11kW	LSLV0075S300-2COFD	LSLV0110S300-2COFD	LSLV0075S300-4COFD	LSLV0110S300-4COFD
15kW	LSLV0110S300-2COFD	LSLV0150S300-2COFD	LSLV0110S300-4COFD	LSLV0150S300-4COFD
18.5kW	LSLV0150S300-2COFD	LSLV0185S300-2COFD	LSLV0150S300-4COFD	LSLV0185S300-4COFD
22kW	LSLV0185S300-2COFD	LSLV0220S300-2COFD	LSLV0185S300-4COFD	LSLV0220S300-4COFD
30kW	LSLV0220S300-2COFD	LSLV0300S300-2COFD	LSLV0220S300-4COFD	LSLV0300S300-4COFD
37kW	LSLV0300S300-2COFD	LSLV0370S300-2COFD	LSLV0300S300-4COFD	LSLV0370S300-4COFD
45kW	LSLV0370S300-2COFD	LSLV0450S300-2COFD	LSLV0370S300-4COFD	LSLV0450S300-4COFD
55kW	LSLV0450S300-2COFD	LSLV0550S300-2COFD	LSLV0450S300-4COFD	LSLV0550S300-4COFD
75kW	LSLV0550S300-2COFD	LSLV0750S300-2COFD	LSLV0550S300-4COFD	LSLV0750S300-4COFD
90kW	LSLV0750S300-2COFD		LSLV0750S300-4COFD	LSLV0900S300-4COFD
110kW			LSLV0900S300-4COFD	LSLV1100S300-4COFD
132kW			LSLV1100S300-4COFD	LSLV1320S300-4COFD
160kW			LSLV1320S300-4COFD	LSLV1600S300-4COFD
185kW			LSLV1600S300-4COFD	LSLV1850S300-4COFD
220kW			LSLV1850S300-4COFD	LSLV2200S300-4COFD
250kW			LSLV2200S300-4COFD	

※ EMC filter and DCR are built-in as default for all products



LSLV 0008 S300 – 2 C O F D

Series Name
S300 Series

Operator	
C	LCD Operator

EMC Filter	
F	Built-in EMC

Drive Capacity(kW)	
0004	0.4kW
0008	0.75kW
⋮	⋮
1850	185kW
2200	220kW

Input Voltage	
2	3 Phase 200V~240V
4	3 Phase 380V~480V

UL Type	
O	UL Open Type
E	UL Type 1

DC Reactor	
D	Built-in DC Reactor

※ UL type 1 can be satisfied if conduit option installed

Input/Output Specifications

Input/Output Specifications (200 V Class 0.4-18.5 kW)

Model: LSLV□□□□S300-2			0004	0008	0015	0022	0040	0055	0075	0110	0150	0185
Applied Motor [1]	Heavy Duty (HD)	[HP]	0.5	1	2	3	5	7.5	10	15	20	25
		[kW]	0.4	0.75	1.5	2.2	4	5.5	7.5	11	15	18.5
	Normal Duty (ND)	[HP]	1	2	3	5	7.5	10	15	20	25	30
		[kW]	0.75	1.5	2.2	4	5.5	7.5	11	15	18.5	22
Output Rating	Rated capacity	HD [kVA]	1.2	1.9	3.0	4.2	6.7	9.5	12.6	17.9	22.9	28.6
		ND [kVA]	1.9	3.0	4.6	6.1	8.4	11.4	16.0	21.3	26.7	31.2
	Rated current [2]	HD [A]	3.2	5	8	11	17.5	25	33	47	60	75
		ND [A]	5	8	12	16	22	30	42	56	70	82
	Output frequency	[Hz]	V/F, V/F-SC [3]: 0.01~590									
			V/F-PG [4]: 0~400									
			SLVC-IM [5], SLVC-PM [6], SVC-IM [7], SVC-PM [8]: 0~400									
	Output voltage	[V]	3-phase 200~240									
Input Rating	Input Voltage	[V]	3-phase 200~240, -15%~+10%									
	Input frequency	[Hz]	50/60 ±5%									
	Rated Current	HD [A]	2.5	4.0	6.8	9.6	15.5	22.1	29.6	42.6	54.8	68.4
		ND [A]	4.0	6.8	10.5	14.1	19.5	26.9	38.1	51.1	63.9	75.8
Weight (kg)			3.2	3.3	3.5	3.7	3.8	5.5	5.6	7.2	12.9	13.2

Input/Output Specifications (200 V Class 22-75 kW)

Model: LSLV□□□□S300-2			0220	0300	0370	0450	0550	0750
Applied Motor [1]	Heavy Duty (HD)	[HP]	30	40	50	60	75	100
		[kW]	22	30	37	45	55	75
	Normal Duty (ND)	[HP]	40	50	60	75	100	125
		[kW]	30	37	45	55	75	90
Output Rating	Rated capacity	HD [kVA]	33.5	43.8	55.3	68.6	83.8	109.7
		ND [kVA]	41.9	52.6	64.4	80.4	109.7	131.5
	Rated current [2]	HD [A]	88	115	145	180	220	288
		ND [A]	110	138	169	211	288	345
	Output frequency	[Hz]	V/F, V/F-SC [3]: 0.01~590					
			V/F-PG [4]: 0~400					
			SLVC-IM [5], SLVC-PM [6], SVC-IM [7], SVC-PM [8]: 0~400					
	Output voltage	[V]	3-phase 200~240					
Input Rating	Input Voltage	[V]	3-phase 200~240, -15%~+10%					
	Input frequency	[Hz]	50/60 ±5%					
	Rated Current	HD [A]	81.3	106.9	135.6	168.4	212.0	277.5
		ND [A]	102.3	129.1	158.1	198.5	277.5	332.5
Weight (kg)			19.1	26.7	38.8	39.1	54	73

[1] The motor capacity is based on a standard 4-pole motor.
[2] The rated output current is limited based on the carrier frequency (DRV-27 Carrier Frequency) settings.
[3] V/F slip compensation control mode
[4] V/F sensored (encorder) control(only available when the induction motor type is selected)
[5] Sensorless vector-induction motor control
[6] Sensorless vector-permanent magnet motor control
[7] Sensored vector-induction motor control
[8] Sensored vector-permanent magnet motor control

Input/Output Specifications (400 V Class 0.4-22 kW)

Model: LSLV□□□□S300-4			0004	0008	0015	0022	0040	0055	0075	0110	0150	0185	0220
Applied Motor [1]	Heavy Duty (HD)	[HP]	0.5	1	2	3	5	7.5	10	15	20	25	30
		[kW]	0.4	0.75	1.5	2.2	4	5.5	7.5	11	15	18.5	22
	Normal Duty (ND)	[HP]	1	2	3	5	7.5	10	15	20	25	30	40
		[kW]	0.75	1.5	2.2	4	5.5	7.5	11	15	18.5	22	30
Output Rating	Rated capacity	HD [kVA]	1.4	2.6	3.7	4.2	7.0	11.3	12.6	18.3	23.6	29.7	34.3
		ND [kVA]	1.9	3.1	4.6	6.1	9.2	13.3	18.3	23.6	29.0	34.3	46.5
	Rated Current [2] (380 - 460 V)	HD [A]	1.8	3.4	4.8	5.5	9.2	14.8	16.5	24	31	39	45
		ND [A]	2.5	4.1	6	8	12.1	17.5	24	31	38	45	61
	Rated Current [2] (460~480V)	HD [A]	1.7	3.1	4.4	5	8.3	13.4	14.9	21.6	27.9	35.1	40.5
		ND [A]	2.3	3.7	5.4	7.6	11	15.8	21.6	27.9	34.2	40.5	54.9
	Output frequency	[Hz]	V/F, V/F-SC: 0.01~590										
			V/F-PG: 0~400										
			SLVC-IM, SLVC-PM, SVC-IM, SVC-PM: 0~400										
	Output voltage	[V]	3-phase 380~480										
Input Rating	Input Voltage	[V]	3-phase 380~480, -15%~+10%										
	Input frequency	[Hz]	50/60 ±5%										
	Rated Current	HD [A]	1.4	2.7	4.1	4.8	8.1	13.1	14.8	21.8	28.3	35.6	41.6
		ND [A]	2.0	3.5	5.2	7.1	10.7	15.7	21.8	28.3	34.7	41.6	56.7
Weight (kg)			3.3	3.5	3.5	3.6	3.7	5.3	5.6	7.6	7.7	13.6	14

Input/Output Specifications (400 V Class 30-75 kW)

Model: LSLV□□□□S300-4			0300	0370	0450	0550	0750
Applied Motor [1]	Heavy Duty (HD)	[HP]	40	50	60	75	100
		[kW]	30	37	45	55	75
	Normal Duty (ND)	[HP]	50	60	75	100	125
		[kW]	37	45	55	75	90
Output Rating	Rated capacity	HD [kVA]	46.5	57.2	69.4	83.8	115.8
		ND [kVA]	57.2	69.4	81.5	108.2	128.8
	Rated Current [2] (380 - 460 V)	HD [A]	61	75	91	110	152
		ND [A]	75	91	107	142	169
	Rated Current [2] (460~480V)	HD [A]	54.9	67.5	81.9	99	136.8
		ND [A]	67.5	81.9	96.3	127.8	156
	Output frequency	[Hz]	V/F, V/F-SC: 0.01~590				
			V/F-PG: 0~400				
			SLVC-IM, SLVC-PM, SVC-IM, SVC-PM: 0~400				
	Output voltage	[V]	3-phase 380~480				
Input Rating	Input Voltage	[V]	3-phase 380~480, -15%~+10%				
	Input frequency	[Hz]	50/60 ±5%				
	Rated Current	HD [A]	56.7	70.1	85.1	103.5	146.5
		ND [A]	70.1	85.1	100.7	136.8	162.9
Weight (kg)			18.6	18.7	28.3	41.2	41.9

[1] The motor capacity is based on a standard 4-pole motor.
[2] The rated output current is limited based on the carrier frequency (DRV-27 Carrier Frequency) settings.

Input/Output Specifications

Input/Output Specifications (400 V Class 90-220 kW)

Model: LSLV□□□□S300-4			0900	1100	1320	1600	1850	2200
Applied Motor [1]	Heavy Duty (HD)	[HP]	125	150	200	250	300	350
		[kW]	90	110	132	160	185	220
	Normal Duty (ND)	[HP]	150	200	250	300	350	400
		[kW]	110	132	160	185	220	250
Output Rating	Rated capacity	HD [kVA]	139	170	201	248	282	324
		ND [kVA]	170	201	248	282	329	367
	Rated Current [2] (380 - 460 V)	HD [A]	183	223	264	325	370	425
		ND [A]	223	264	325	370	432	481
	Rated Current [2] (460~480V)	HD [A]	164.7	200.7	237.6	292.5	333	382.5
		ND [A]	200.7	237.6	292.5	333	388.8	432.9
	Output frequency	[Hz]	V/F, V/F-SC: 0.01~590					
			V/F-PG: 0~400					
			SLVC-IM, SLVC-PM, SVC-IM, SVC-PM: 0~400					
	Output voltage	[V]	3-phase 380~480					
Input Rating	Input Voltage	[V]	3-phase 380~480, -15%~+10%					
	Input frequency	[Hz]	50/60 ±5%					
	Rated Current	HD [A]	178.4	217.4	258.9	318.7	367.0	428.8
		ND [A]	217.4	257.4	318.7	362.8	428.5	485.3
Weight (kg)			58	58	77	78	120.5	121.5

[1] The motor capacity is based on a standard 4-pole motor.
[2] The rated output current is limited based on the carrier frequency (DRV-27 Carrier Frequency) settings.

Product Specifications

Items			Description		
Control	Control method		V/F control, slip compensation, V/F PG, sensorless vector, sensored vector		
	Frequency settings power resolution		Digital command: 0.01Hz		
			Analog command: 0.06 Hz(60 Hz standard)		
	Frequency accuracy		1% of maximum output frequency		
	V/F pattern		Linear, square reduction, user V/F		
	Overload capacity		Normal duty (ND):	200V: 45 kW or less 120%, 1 minute / 55 kW or more 110%, 1 minute 400V: 75 kW or less 120%, 1 minute / 90 kW or more 110%, 1 minute	
			Heavy duty (HD):	150%/minute compared to CT rated current	
	Torque Boost		Manual torque boost, automatic torque boost		
Run	Operation type		Select among Smart Operator, terminal block, and communication operation		
	Frequency Settings		Analog type: -10-10 V, 0-10 V, 0-20 mA Digital type: smart Operator, pulse train input		
	Operation function		PID Control, Up-down operation, 3-Wire Operation, DC braking, Frequency (speed) limit, Frequency Jump, Second function, Slip compensation, Anti-forward and reverse direction rotation, Automatic restart, Commercial transition, Kinetic energy buffering operation, Speed search, Flux Braking, Power braking, Energy Saving Operation, Leakage reduction operation		
	Input	Multifunction Terminal (8ea) DI1-DI8	Select between PNP (Source) and NPN (Sink) modes Functions can be set according to parameter settings at DIN-01, 03, 05, 07, 09, 11, 13, and 15 as follows: forward operation, reverse operation Reset, Emergency stop, External trip 1, 2, 3, 4, Jog operation, Multi-stage frequency: L/M/H/X Multi-stage acceleration and deceleration: high/medium/, low, Acceleration or deceleration stop Safe operation (Run Enable), 3-wire, Second operation (2nd Source), Switching to commercial power (Exchange), Increase/reduce/delete/save up-down operation, frequency, Fix command frequency Second motor selection, DC braking during stop, Timer settings (Timer Input), Deactivate auxiliary speed, FWD jog, REV jog, PID Enable, Open Loop, PID Ref, Gain Change, PID I-Term Clear, PID Output Hold, PID Sleep On/Change, PID Step Ref L/M/H		
		Pulse Train	0~32kHz	Low Level	0.0~0.8V
				High Level	3.5~12.0V
	Output	Multifunction Open Collector Terminal	Trip output and inverter operation status output	Less than DC 26V, 50mA	
		Trip Relay Terminal		N.O.	Less than AC 250 V, 2 A, less than DC 30 V, 3 A
				N.C.	Less than AC 250 V, 1 A, less than DC 30 V, 1 A
		Multi function relay terminal		Less than AC 250 V, 5 A	
				Less than DC 30 V, 5A	
		Analog Output	0 - 10 Vdc (0-20 mA): frequency, output current, output voltage, DC voltage, and more are selectable		
		Pulse Train	Maximum of 32 kHz, 0-10 V		
Protection Functions	Trip		Overcurrent trip, Overvoltage trip, External signal trip, Temperature sensor trip, ARM short current fault trip, Inverter overheat trip, Over heat trip, Out phase open trip, In phase open trip, Inverter overload trip, Ground trip, Fan trip, Motor overheat trip, Low voltage trip during operation, I/O board link trip, Low voltage trip, Parameter writing trip, Analog input error trip, Emergency stop trip, Motor overload trip, Command loss trip, Smart Operator command loss trip, External memory error, Level detection trip, CPU watchdog trip, Motor normal duty trip		
	Alarm		Warnings for command loss, overload, normal duty, inverter overload, fan operation, braking rate of braking resistance, and LDT		

Product Details/Structure and Operating Environment

Product Structure/Usage Environment

Items		Description
Structure/ Usage Environment	Cooling type	Forced fan cooling structure
	Protection structure	IP 20 (default), UL Open & Enclosed Type 1 (optional) Installing Conduit option fulfills UL Enclosed Type 1
	Ambient temperature	Where there is no ice or frost, • -10~50°C on heavy duty • -10~40°C on normal duty The conduit option requires 1.5%/°C current derating when it is over 30°C on normal duty and when it is over 40°C on heavy duty.
	Ambient humidity	Relative humidity less than 95% RH (to avoid condensation forming)
	Storage temperature	-20~65°C
	Environmental Factors	No corrosive gas, inflammable gas, oil stains, dust, and other pollutants inside (Pollution Degree 2 Environment [1])
	Operation altitude/ oscillation	No higher than 3280 ft (1,000 m), less than 9.8 m2/sec (1.0 G).
	Air Pressure	70~106kPa

[1] Pollution level of temporary conductivity from dew, though nonconductive pollution occurs.

Wiring Diagram

Input/Output control terminal wiring diagram

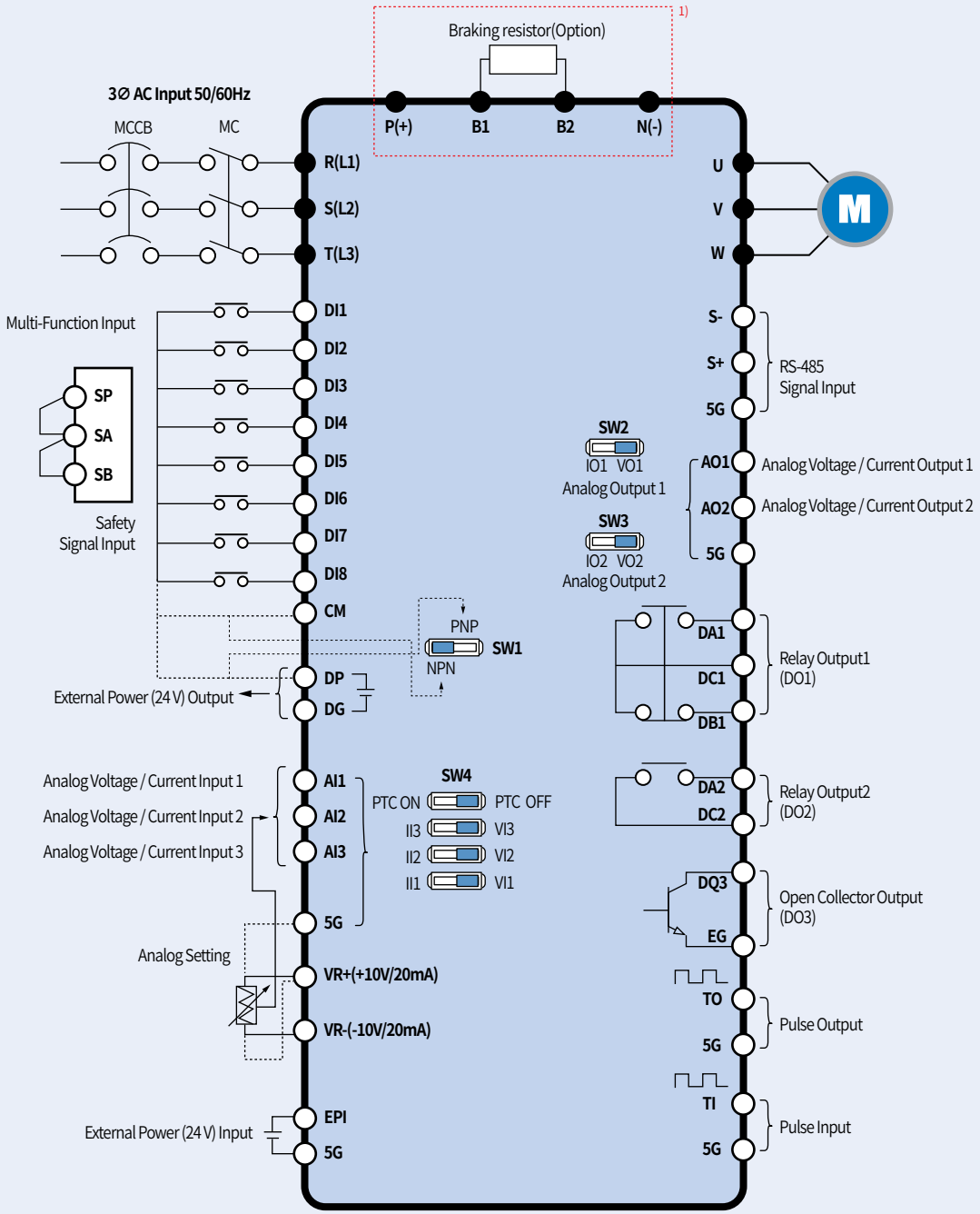

Note1) Refer to page 33 onwards for more detailed specifications of braking resistor and braking unit

Main Circuit Terminals

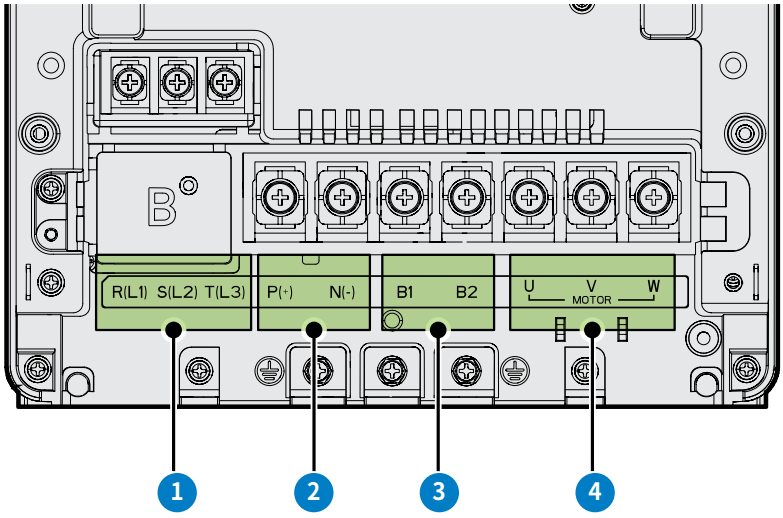

Power terminal

Dip switch configuration

Switch labels	Description	Factory value (Default)
SW1	NPN/PNP setting switch (Left: NPN, Right: PNP)	Left: NPN
SW2	IO1/VO1 terminal setting switch (Left: IO1, Right: VO1)	Right: VO1
SW3	IO2/VO2 terminal setting switch (Left: IO2, Right: VO2)	Right: VO2
SW4	I1, I2, I3, PTC ON/V1, V2, V3 PTC OFF terminal selection switch (Left: I1, I2, I3, PTC ON, Right: V1, V2, V3, PTC OFF)	Right: V1, V2, V3, PTC OFF

- **DI1~DI8**: Digital Input 1-8
- **DP**: Digital Power 24 V Output, Max 150 mA
- **DG**: Digital Ground
- **CM**: Digital Input Common
- **DA1, DC1, DB1**: Digital Relay1 Output
- **DA2, DC2**: Digital Relay2 Output
- **DQ3, EG**: Digital Open Collector Output
- **EPI**: Power Supply Input (for external power supply)
- **5G**: Analog Ground
- **AO1, AO2**: Analog Output 1, 2
- **AI1, AI2, AI3**: Analog Input 1, 2, 3
- **PTC**: Positive Temperature Coefficient thermistor
- **VR+, VR-**: Analog ± Voltage Reference, output voltage ±10 V, Maximum current output 20 mA
- **TO**: Pulse Train Output
- **TI**: Pulse Train Input

Power terminal configuration

No.	Terminal Labels	Name	Description
1	R(L1), S(L2), T(L3)	AC power input terminal	Mains supply AC power connections.
2	P(+)	+ DC link terminal	DC voltage (+) terminal. Connects DC (+) when using DC as inverter power.
	N(-)	- DC link terminal	DC voltage (-) terminal. Connects DC (-) when using DC as inverter power.
3	B1, B2	Brake resistor terminal	Connects the brake resistor.
4	U, V, W	Motor output terminal	Connects a 3-phase induction motor.

LSLV0004S300~LSLV0185S300(200V) / LSLV0004S300~LSLV0370S300(400V)

• Using the built-in braking unit

- When using the built-in braking unit, wire braking resistor to B1 and B2 terminals

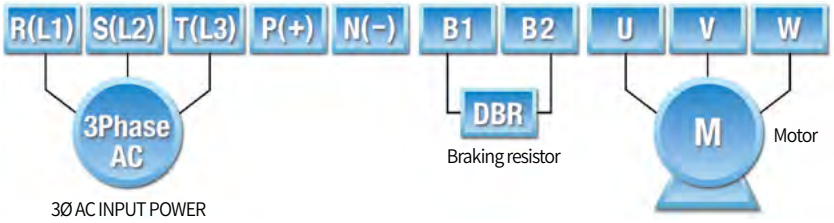

• Using seperate braking unit

- When using the separate braking unit, wire the P terminal of the drive to the P terminal of the braking unit, and the N terminal of the drive to the N terminal of the braking unit.
- The B terminal of the drive is not used.

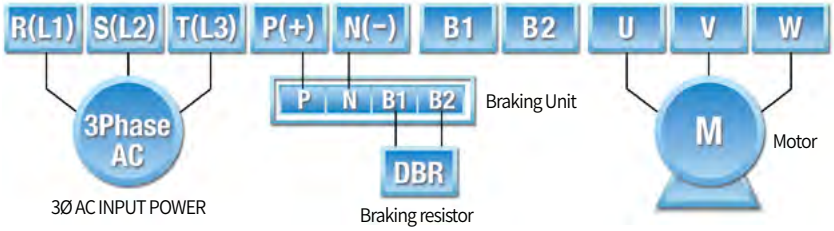

Terminal Labels	Terminal Name	Terminal Description
R(L1), S(L2), T(L3)	AC power input terminal	Mains supply AC power connections.
P(+)	+ DC link terminal	DC voltage (+) terminal.
N(-)	- DC link terminal	DC voltage (-) terminal.
P(+), B	Brake resistor terminal	Connects the brake resistor.
U, V, W	Motor output terminal	Connects a 3-phase induction motor.

LSLV0220S300~LSLV0750S300(200V) / LSLV0450S300~LSLV2200S300(400V)

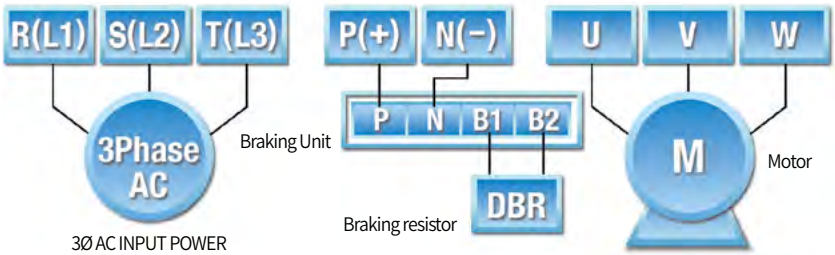

Terminal Labels	Terminal Name	Terminal Description
R(L1), S(L2), T(L3)	AC power input terminal	Mains supply AC power connections.
P(+)	+ DC link terminal	DC voltage (+) terminal.
N(-)	- DC link terminal	DC voltage (-) terminal.
U, V, W	Motor output terminal	Connects a 3-phase induction motor.

Input/communication terminal configuration

Category	Terminal Labels	Name	Description
Terminal input selection	DI1~DI8	Digital input Terminals 1-8	Configurable for digital input terminals. The factory default is as follows: • **DI1**: FX • **DI2**: RX • **DI3**: BX • **DI4**: External Trip-1 • **DI5**: Speed-L • **DI6**: Speed-M • **DI7**: Speed-H • **DI8**: JOG
	CM	Common terminal	Common terminal for digital input terminals.
Analog input	VR+	Analog positive (+) voltage reference terminal	Power supply for analog reference. • **Output Voltage**: 10V • **Maximum Current Output**: 20mA • **Potentiometer**: 1~10kΩ
	VR-	Analog negative (-) voltage reference terminal	Power supply for analog reference. • **Output Voltage**: -10V • **Maximum Current Output**: 20mA • **Potentiometer**: 1~10kΩ
	AI1~AI3	Analog voltage/ current input terminal (switch selection)	Depending on the setting of the switch (SW4), it can be used as either a voltage or current input. AI3 can be used as PTC sensor input. Factory default is V1, 2, and 3. **[When voltage is selected]** Select the appropriate terminal block by setting the switch (SW4) to V1, 2, 3. Depending on the setting of the analog input mode, the following voltage ranges can be used. • **Unipolar**: 0.00 - 10.00 V • **Bipolar**: -10.00 - 10.00 V **[When current is selected]** Select the appropriate terminal block by setting the switch (SW4) to I1, 2, 3. If the analog input mode is set to "Current," the following current range can be used. • **Input current**: 4~20mA (0~20mA) **[When inputting PTC]** Connect the PTC sensor to the AI3 input terminal and select the PTC ON switch (SW4). 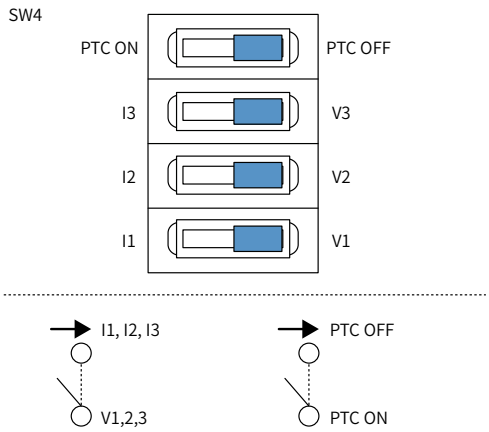 [Factory default setting for analog input terminal (SW4 switch)]

Category	Terminal Labels	Name	Description
Analog input	AI1~AI3	Analog voltage/ current input terminal (switch selection)	**[Note]** **Remove SW4 dip switch seal tape** It is shipped with seal tape attached for SW4 dip switch protection (factory default: analog voltage input). Remove the seal tape to change the switch settings, as shown in the following illustration. Using the cut-out corner of the switch mold, the seal tape can be easily removed. 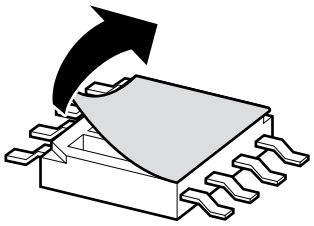 [Remove SW4 switch seal tape]
	TI	Pulse train input terminal	Set it to 0.00-32.00 kHz and enter it. • **Low Level**: 0.0~1.2V • **High Level**: 2.0~12.0V (Duty 30~70%)
	5G	Analog common terminal	Analog ground common terminal. (It differs from the CM common terminal.)
External power input	EPI	External power input terminal	By connecting external power to the EPI terminal and 5G ground, it can be utilized as backup power for the control unit. It is possible to use the Smart Operator, communication options, and some of the controller's features. • **Precautions**: do not connect external power to DP/DG terminals. The DP/DG terminal is for internal power or service power. • **Input power**: 24V (21.6~26.4V), 0.5A
RS-485 communication	S+/S-	RS-485 signal input terminal	Used to send or receive RS-485 signals. Refer to the manual(10 Using Built-in Communication Features) for more details. It is used with 5G ground.

Output Terminal Labels and Descriptions

Category	Terminal Labels	Name	Description
Analog output	AO1~AO2	Analog voltage/current Output terminal (switch selection)	Depending on the selection of the switch (SW2, SW3), it can be used as either a voltage or current output. Factory default is VO1, VO2. **[When voltage is selected]** Select the appropriate terminal block by selecting the switch (SW2, SW3) to VO1, VO2. Depending on the setting of the analog output mode, the following voltage ranges can be used. • **Unipolar**: 0.00 - 10.00V • **Bipolar**: -10.00 - 10.00V **[When current is selected]** Select the appropriate terminal block by selecting the switch (SW2, SW3) to IO1, IO2. If the analog output mode is set to "Current," the following current ranges can be used. • **Output current**: 4.00~20.00mA • **External resistor connection**: 249Ω 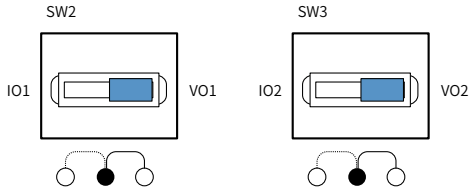
	TO	Pulse train output terminal	It outputs 0.00-32.00 kHz. (Duty around 50%) • **Low Level**: 1 V or less • **High Level**: 12V
	5G	Analog common terminal	Analog ground common terminal.
Digital power	DP	Digital power output terminal	Digital service power. DC 24 V (21.6 - 26.4 V), 150 mA or less • **Precautions**: do not connect with the CM (digital common terminal).
	DG	Digital ground terminal	
Terminal output	DA1, DC1, DB1	Digital multifunction output relay 1 terminal (A, B terminal) (parameter DO1)	It outputs a signal or multifunction signal in other situations, including when the product's protection function is activated. • **N.O.**: AC 250 V 2 A or less, DC 30 V 3 A or less • **N.C.**: AC 250 V 1 A or less, DC 30 V 1 A or less • **Fault condition**: A1 and C1 contacts are connected (B1 and C1 open connection) • **Normal operation**: B1 and C1 contacts are connected (A1 and C1 open connection)
	DA2, DC2	Digital multifunction output relay 2 terminal (A terminal) (parameter DO2)	• **N.O.**: AC 250 V 2 A or less, DC 30 V 3 A or less • **N.C.**: AC 250 V 1 A or less, DC 30 V 1 A or less • **Fault condition**: A1 and C1 contacts are connected (B1 and C1 open connection)
	DQ3, EG	Digital multifunction open collector output terminal (parameter DO3)	It selects and outputs one of the multifunction output signals.

Description of the Smart Operator's Composition and Functions

Refer to the following illustration and table to identify the part names and functions of the Smart Operator.



[Front part of the Smart Operator]

[Rear part of the Smart Operator]

Description of Operation Key Functions

Refer to the following table for descriptions of the functions for each key.

Smart Operator operation key

Classification	Display	Function name	Functionality
Key	MODE	MODE key	Displays the Menu screen.
	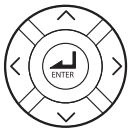	Program (ENTER) key	By pressing once in the parameter code that can be set, the parameter code enters an editing state, and by pressing again after editing, the modified data will be saved.
		Up arrow key/ Down arrow key	Used when moving codes or editing data values.
		Left arrow key/ Right arrow key	Navigates between groups. Moves the cursor in editing mode.
	MULTI	Multifunction (MULTI) key	Local/Remote, Keypad Jog, and Favorite codes can be registered depending on the settings. Refer to the manual(12.1.1 Parameter Settings for Setting Mode) for more details.
	ESC	Cancel (ESC) key	In editing mode, if you press the Cancel ESC key before pressing the Program ENTER key, the previously saved data will be retained. Press to navigate to the first code of a group when moving codes within a group.
	REV	Reverse operation (REV) key	Operates in the reverse direction
	STOP/RESET	STOP key	Stops the inverter or resets the trip.
	FWD	Forward operation (FWD) key	Operates in the forward direction.

Menu (mode) and Screen

The S300 series inverter consists of six modes, as follows: each mode has function items appropriate for its characteristics, and in the case of parameter mode, functions necessary for the operation of the inverter are displayed as group units.

- **Monitor** : monitor mode
- **Parameter**: parameter configuration mode
- **Favorite**: favorite mode
- **Fault**: trip mode
- **Setting**: configuration mode
- **Wizard**: wizard mode (Easy Start)

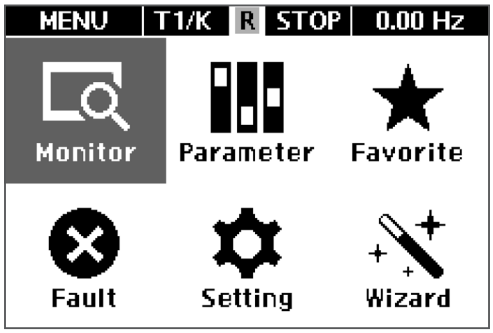

Enter the main menu screen by pressing the MODE key, select the desired mode using the direction keys (▲/▼/◀/▶), and press the ENTER key to navigate to the corresponding screen.

Monitor mode

In Monitor mode, information about the inverter's operation is displayed. You can set the frequency, display the operating frequency, monitor the output current and voltage, etc.

Enter the main menu screen by pressing the MODE key, select the Monitor mode using the direction keys (▲/▼/◀/▶) and press the ENTER key to navigate to the Monitor mode screen.

The Monitor mode is composed of the following:

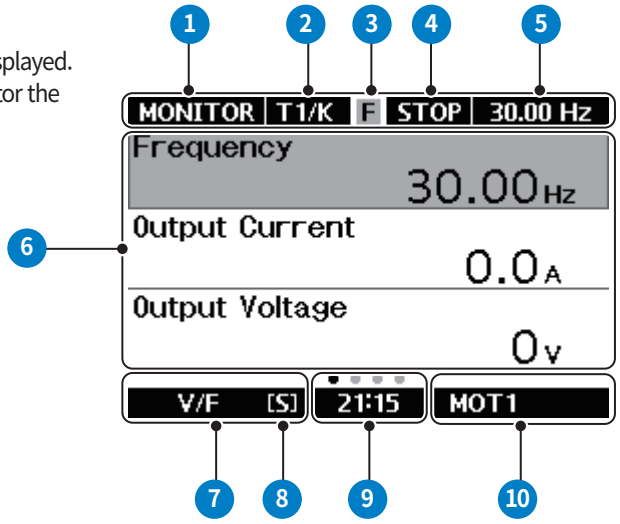

Monitor mode screen composition

No.	Screen name	Display	Description
1	Mode display	**MONITOR**	Monitor mode
		PARAM	Parameter mode
		PARAM E	Parameter editing mode
		FAVORITE	Favorite mode
		FAVOR.E	Favorite editing mode
		FAULT	Fault mode
		HISTORY	Fault history mode
		SETTING	Configuration mode
		WIZARD	Wizard mode

No.	Screen name	Display	Description
②	Operation command source	**K**	Smart Operator
		T1	Terminal-1
		T2	Terminal-2
		3W	3-Wire
		R	RS-485 built-in communication
		O	Option
		U	USB
		KJ	Smart Operator jog
		TJ	Terminal jog
		US	User Sequence
	Frequency command source	**K**	Smart Operator
		A1, A2 , A3	Analog A1, A2, A3
		P	Pulse
		UD	Up/Down
		R	485 built-in communication
		U	USB
		O	Option
		US	User Sequence
		X1, X2, X3	Extension option analog
		PS	Position Control
		J	Jog
		PI	PID
		1~15	Multistep speed 1-15
③	Multifunction key setting	**R**	Remote Mode
		L	Local Mode
		J	Smart Operator jog
		F	Favorite Register/Delete
④	Inverter operation state	**STOP**	Stopped
		FWD	Forward operation
		REV	Reverse operation
		TRIP	Trip
		WARN	Warning
		STL	Stall
		SPS	Speed search
		OSS	S/W overcurrent suppression
		OSH	H/W overcurrent suppression
		TUNE	Tuning
		FIRE	Fire Mode
		SLP	PID Operation Sleep Mode
		DC	DC Braking
		KEB	KEB operation
⑤	Continuous monitoring display items	**Frequency (default)**	Refer to page 457, 12.2.2 Monitoring Item Settings for Top Status Bar.
⑥	Display items	**MONITOR1 (default)**	Monitor 1, monitor 2, monitor gauge, monitor graph display (press / key in Monitor mode to change monitor screen type)
⑦	Control mode display	**V/F**	V/F control mode
		Slip Comp.	Slip Compensation control mode
		V/F PG	V/F PG control mode
		Sensorless	Sensorless Vector control mode
		Vector	Sensored Vector control mode
⑧	Operation mode display	**[S]**	Speed control mode
		[T]	Torque control mode
		[P]	Position control mode
⑨	Current time display	**Hour:minute**	Current time
⑩	Control motor display	**MOT1**	First motor selection
		MOT2	Second motor selection

Compatible Molded Case Circuit Breaker, Earth Leakage Circuit Breaker, and Magnetic Contactor Standards

Model LSLV□□□□	Molded Case Circuit Breaker (MCCB)		Earth Leakage Circuit Breaker (ELCB)	Magnetic Contactor(MC)		
	Model	Rating[A]	Model	Rating[A]	Model	Rating[A]
0004S300-2	UTE100·H·FTU·15·3P·UL	15	EBS33c	10	MC-6a	9
0008S300-2	UTE100·H·FTU·15·3P·UL	15	EBS33c	10	MC-9a	11
0015S300-2	UTE100·H·FTU·15·3P·UL	15	EBS33c	15	MC-12a	13
0022S300-2	UTE100·H·FTU·20·3P·UL	20	EBS33c	20	MC-18a	18
0040S300-2	UTE100·H·FTU·30·3P·UL	30	EBS33c	30	MC-32a	32
0055S300-2	UTS150·H·FTU·40·3P·UL	40	EBS53c	40	MC-40a	40
0075S300-2	UTS150·H·FTU·60·3P·UL	60	EBS63c	60	MC-55a	55
0110S300-2	UTS150·H·FTU·80·3P·UL	80	EBS103c	75	MC-75a	75
0150S300-2	UTS150·H·FTU·100·3P·UL	100	EBS103c	100	MC-100a	100
0185S300-2	UTS150·H·FTU·125·3P·UL	125	EBS103c	125	MC-130a	130
0220S300-2	UTS150·H·FTU·150·3P·UL	150	EBS203c	150	MC-150a	150
0300S300-2	UTS250·H·FTU·200·3P·UL	200	EBS203c	175	MC-185a	185
0370S300-2	UTS250·H·FTU·225·3P·UL	225	EBS403c	225	MC-225a	225
0450S300-2	UTS400·H·FTU·300·3P·UL	300	EBS403c	300	MC-265a	265
0550S300-2	UTS400·H·FTU·400·3P·UL	400	EBS403c	400	MC-400a	400
0750S300-2	UTS600·H·FTU·500·3P·UL	500	EBS603c	500	MC-500a	500
0004S300-4	UTS150·L·MCP·3.2·3P·UL	3.2	EBS33c	5	MC-6a	7
0008S300-4	UTS150·L·MCP·6.3·3P·UL	6.3	EBS33c	5	MC-6a	7
0015S300-4	UTS150·L·MCP·12·3P·UL	12	EBS33c	10	MC-9a	9
0022S300-4	UTS150·L·MCP·12·3P·UL	12	EBS33c	10	MC-12a	12
0040S300-4	UTS150·L·MCP·20·3P·UL	20	EBS33c	15	MC-18a	18
0055S300-4	UTS150·L·MCP·32·3P·UL	32	EBS33c	25	MC-32a	32
0075S300-4	UTS150·L·MCP·32·3P·UL	32	EBS33c	30	MC-32a	32
0110S300-4	UTS150·L·FTU·40·3P·UL	40	EBS53c	50	MC-50a	43
0150S300-4	UTS150·L·FTU·50·3P·UL	50	EBS53c	50	MC-65a	65
0185S300-4	UTS150·L·FTU·60·3P·UL	60	EBS63c	60	MC-65a	65
0220S300-4	UTS150·L·FTU·80·3P·UL	80	EBS103c	100	MC-100a	100
0300S300-4	UTS150·L·FTU·100·3P·UL	100	EBS103c	100	MC-100a	100
0370S300-4	UTS150·L·FTU·125·3P·UL	125	EBS103c	125	MC-130a	130
0450S300-4	UTS150·L·FTU·150·3P·UL	150	EBS203c	150	MC-150a	150
0550S300-4	UTS250·L·FTU·175·3P·UL	175	EBS203c	200	MC-185a	185
0750S300-4	UTS250·L·FTU·225·3P·UL	225	EBS203c	225	MC-225a	225
0900S300-4	UTS400·L·FTU·300·3P·UL	300	EBS403c	300	MC-330a	330
1100S300-4	UTS400·L·FTU·400·3P·UL	400	EBS403c	350	MC-400a	400
1320S300-4	UTS600·L·FTU·500·3P·UL	500	EBS603c	500	MC-500a	500
1600S300-4	UTS600·L·FTU·600·3P·UL	600	EBS603c	500	MC-500a	500
1850S300-4	UTS600·L·FTU·600·3P·UL	600	EBS603c	600	MC-630a	630
2200S300-4	UTS800·L	800	EBS803c	800	MC-800a	800

Caution

- Use Class CC, G, J, L, R or T UL Listed Input Fuse and UL Listed Breaker Only.
  See the table above For the Voltage and Current rating of the fuse and the breaker.

Attention

- Utiliser UNIQUEMENT des fusibles d' entrée homologués de Classe CC, G, J, L, R ou T UL et des disjoncteurs UL.
  Se reporter au tableau ci-dessus pour la tension et le courant nominal des fusibless et des disjoncteurs.

External Dimensions (IP20 Type)

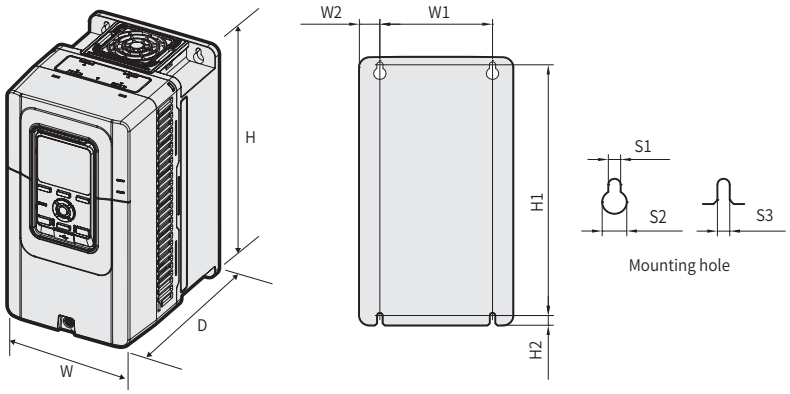

External Dimensions (200 V Class 0.4-4 kW/400 V Class 0.4-4 kW)

Unit: mm(inch)

Model	W	H	D	W1	W2	H1	H2	S1	S2	S3
LSLV0004S300-4 LSLV0008S300-4 LSLV0015S300-4 LSLV0022S300-4 LSLV0040S300-4 LSLV0004S300-2 LSLV0008S300-2 LSLV0015S300-2 LSLV0022S300-2 LSLV0040S300-2	150.0 (5.91)	276.0 (10.87)	192.0 (7.56)	110.0 (4.33)	20.0 (0.79)	258.0 (10.16)	10.0 (0.39)	6.0 (0.24)	12.0 (0.47)	6.0 (0.24)

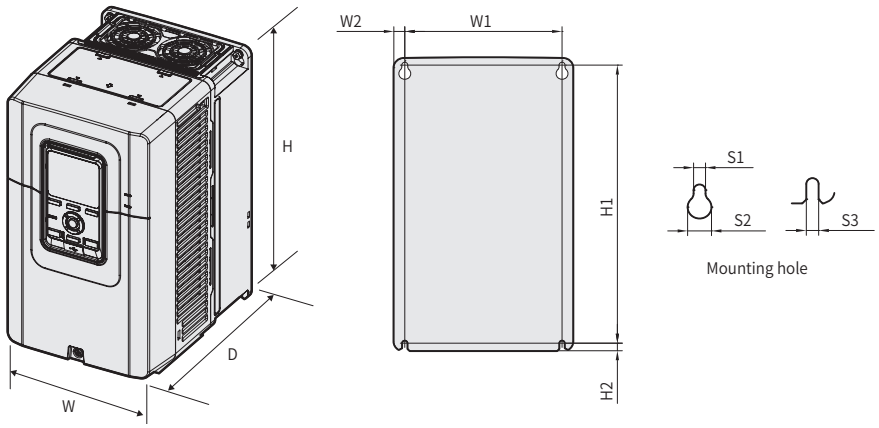

External Dimensions (200 V Class 5.5-7.5 kW/400 V Class 5.5-7.5 kW)

Unit: mm(inch)

Model	W	H	D	W1	W2	H1	H2	S1	S2	S3
LSLV0055S300-4 LSLV0075S300-4 LSLV0055S300-2 LSLV0075S300-2	180.0 (7.09)	310.0 (12.20)	225.0 (8.86)	158.0 (6.22)	11.0 (0.43)	294.0 (11.57)	8.0 (0.31)	6.0 (0.24)	12.0 (0.47)	6.0 (0.24)

External Dimensions (IP20 Type)

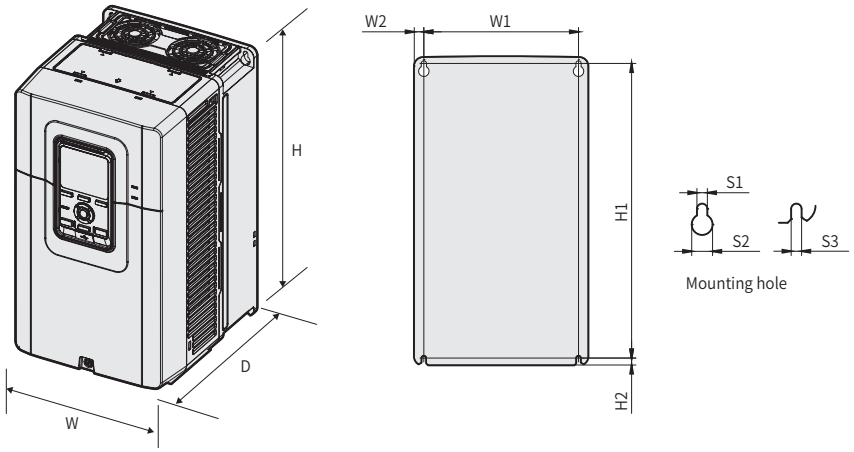

External Dimensions (200 V Class 11 kW/400 V Class 11-15 kW)

Unit: mm(inch)

Model	W	H	D	W1	W2	H1	H2	S1	S2	S3
LSLV0110S300-4 LSLV0150S300-4 LSLV0110S300-2	200.0 (7.87)	355.0 (13.98)	225.0 (8.86)	178.0 (7.01)	11.0 (0.43)	339.0 (13.35)	8.0 (0.31)	6.0 (0.24)	12.0 (0.47)	6.0 (0.24)

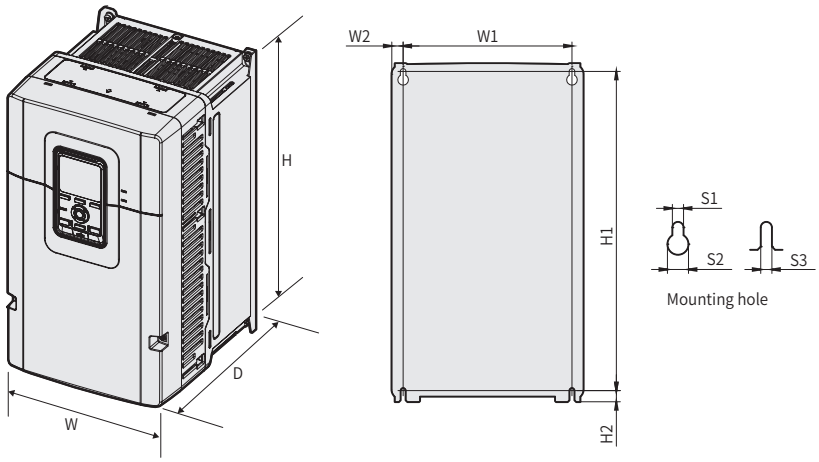

External Dimensions (200 V Class 15-18.5 kW/400 V Class 18.5-22 kW)

Unit: mm(inch)

Model	W	H	D	W1	W2	H1	H2	S1	S2	S3
LSLV0185S300-4 LSLV0220S300-4 LSLV0150S300-2 LSLV0185S300-2	240.0 (9.45)	424.0 (16.69)	265.0 (10.43)	211.6 (8.33)	14.2 (0.56)	400.0 (15.75)	14.0 (0.55)	7.0 (0.28)	13.2 (0.52)	7.0 (0.28)

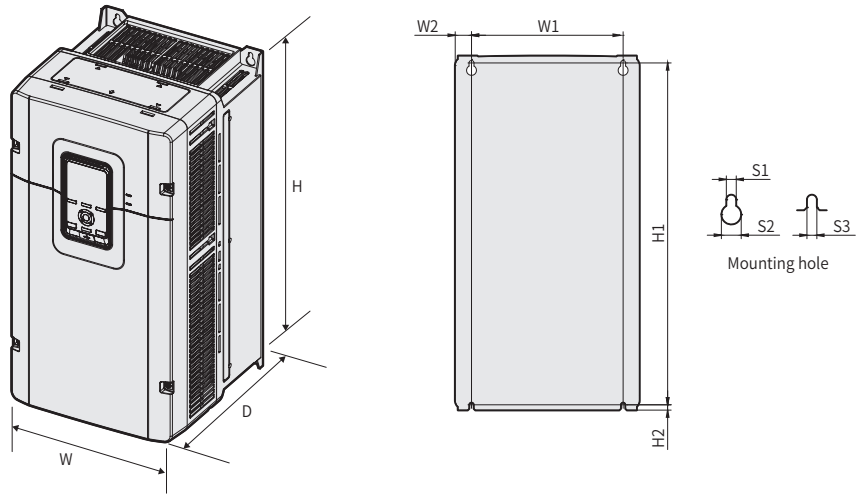

External Dimensions (200 V Class 22 kW/400 V Class 30-37 kW)

Unit: mm(inch)

Model	W	H	D	W1	W2	H1	H2	S1	S2	S3
LSLV0300S300-4 LSLV0370S300-4 LSLV0220S300-2	260.0 (10.24)	500.0 (19.69)	271.0 (10.67)	214.0 (8.43)	23.0 (0.91)	482.5 (19.00)	7.5 (0.30)	7.0 (0.28)	14.0 (0.55)	7.0 (0.28)

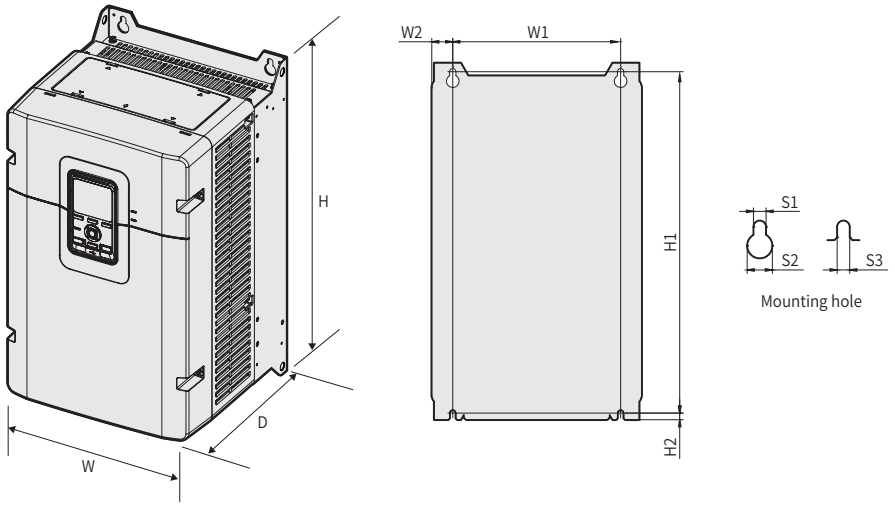

External Dimensions (200 V Class 30 kW/400 V Class 45 kW)

Unit: mm(inch)

Model	W	H	D	W1	W2	H1	H2	S1	S2	S3
LSLV0450S300-4 LSLV0300S300-2	300.0 (11.81)	510.0 (20.08)	298.2 (11.74)	240.0 (9.45)	30.0 (1.18)	488.0 (19.21)	9.5 (0.37)	9.0 (0.35)	18.0 (0.71)	9.0 (0.35)

External Dimensions (IP20 Type)

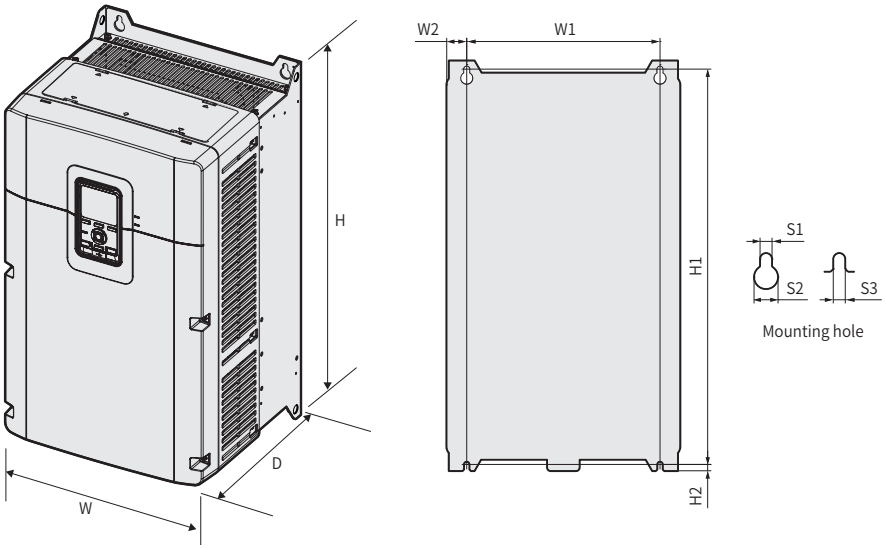

External Dimensions (200 V Class 37-45 kW/400 V Class 55-75 kW)

Unit: mm(inch)

Model	W	H	D	W1	W2	H1	H2	S1	S2	S3
LSLV0550S300-4 LSLV0750S300-4 LSLV0370S300-2 LSLV0450S300-2	350.0 (13.78)	615.0 (24.21)	318.3 (12.53)	290.0 (11.42)	30.0 (1.18)	593.0 (23.35)	9.5 (0.37)	9.0 (0.35)	18.0 (0.71)	9.0 (0.35)

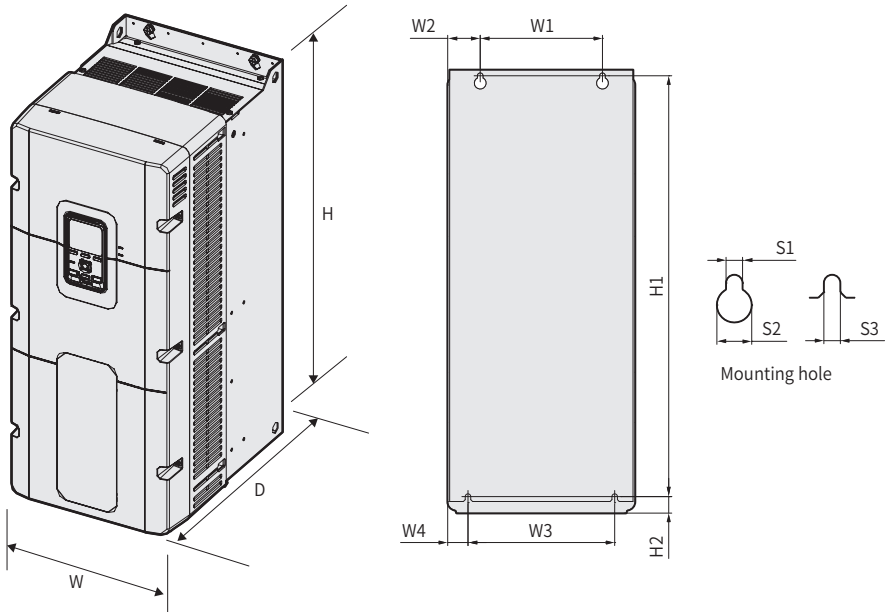

External Dimensions (400 V Class 90-110 kW)

Unit: mm(inch)

Model	W	H	D	W1	W2	W3	W4	H1	H2	S1	S2	S3
LSLV0900S300-4 LSLV1100S300-4	306.4 (12.06)	725.0 (28.54)	391.0 (15.39)	200.0 (7.87)	53.2 (2.09)	240.0 (9.45)	33.2 (1.31)	688.5 (27.11)	27.0 (1.06)	9.0 (0.35)	19.0 (0.75)	9.0 (0.35)

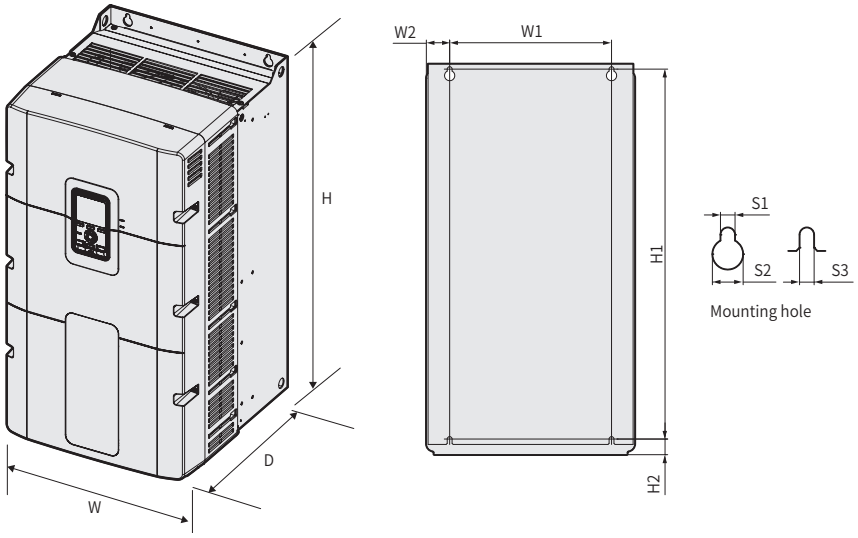

External Dimensions (200 V Class 55-75 kW/400 V Class 132-160 kW)

Unit: mm(inch)

Model	W	H	D	W1	W2	H1	H2	S1	S2	S3
LSLV1320S300-4 LSLV1600S300-4 LSLV0550S300-2 LSLV0750S300-2	386.4 (15.21)	724.0 (28.50)	401.0 (15.79)	300.0 (11.81)	43.2 (1.70)	685.5 (26.99)	29.0 (1.14)	9.0 (0.35)	19.0 (0.75)	9.0 (0.35)

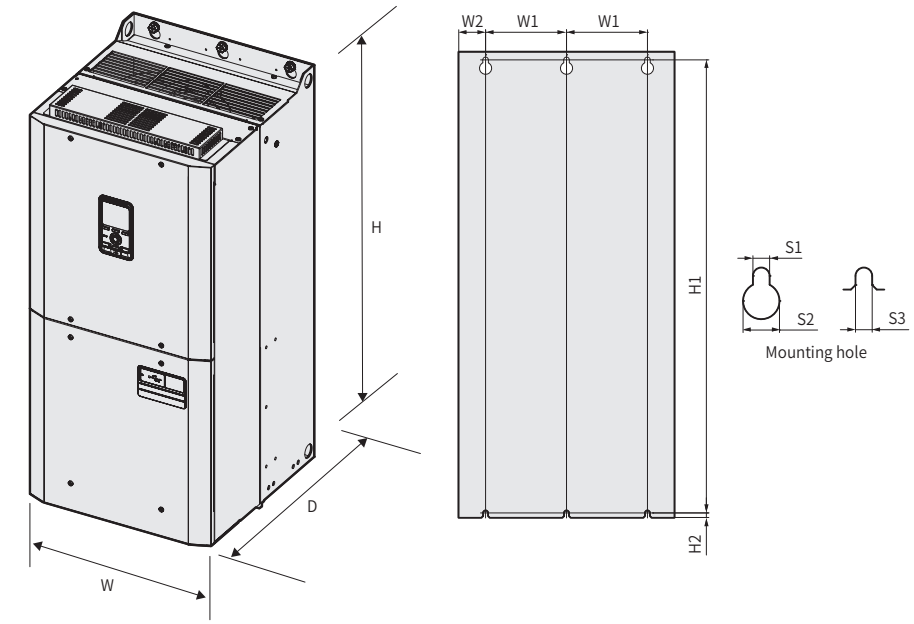

External Dimensions (400 V Class 185-220 kW)

Unit: mm(inch)

Model	W	H	D	W1	W2	H1	H2	S1	S2	S3
LSLV1850S300-4 LSLV2200S300-4	426.0 (16.77)	920.0 (36.22)	440.9 (17.36)	160.0 (6.30)	53.0 (2.09)	895.5 (35.26)	9.0 (0.35)	11.0 (0.43)	24.0 (0.94)	11.0 (0.43)

AC Input Fuse and Reactor Specifications

This product has a built-in DC reactor. To additionally install an AC reactor, contact our customer service center.

Model LSLV□□□□	AC Input Fuse		AC Reactor*	
	Voltage [V]	Current [A]	Inductance [mH]	Current [A]
0004S300-2	600	10	2.02	5
0008S300-2	600	15	1.12	9
0015S300-2	600	15	0.92	11
0022S300-2	600	25	0.59	17
0040S300-2	600	35	0.42	24
0055S300-2	600	50	0.30	34
0075S300-2	600	70	0.22	46
0110S300-2	600	80	0.16	64
0150S300-2	600	100	0.12	83
0185S300-2	600	125	0.10	103
0220S300-2	600	150	0.08	123
0300S300-2	600	200	0.06	161
0370S300-2	600	250	0.05	204
0450S300-2	600	300	0.04	253
0550S300-2	600	400	0.03	334
0750S300-2	600	500	0.02	417
0004S300-4	600	6	6.74	3
0008S300-4	600	6	4.04	5
0015S300-4	600	10	2.89	7
0022S300-4	600	15	2.25	9
0040S300-4	600	20	1.56	13
0055S300-4	600	25	1.01	20
0075S300-4	600	35	0.75	27
0110S300-4	600	50	0.59	34
0150S300-4	600	60	0.47	43
0185S300-4	600	80	0.37	54
0220S300-4	600	100	0.29	69
0300S300-4	600	100	0.24	86
0370S300-4	600	125	0.19	106
0450S300-4	600	150	0.16	128
0550S300-4	600	200	0.12	165
0750S300-4	600	250	0.09	220
0900S300-4	600	400	0.08	261
1100S300-4	600	400	0.07	309
1320S300-4	600	500	0.05	383
1600S300-4	600	600	0.05	446
1850S300-4	600	600	0.04	515
2200S300-4	600	800	0.03	583

Caution

- Use Class CC, G, J, L, R or T UL Listed Input Fuse and UL Listed Breaker Only.
  See the table above For the Voltage and Current rating of the fuse and the breaker.

Attention

- Utiliser UNIQUEMENT des fusibles d' entrée homologués de Classe CC, G, J, L, R ou T UL et des disjoncteurs UL.
  Se reporter au tableau ci-dessus pour la tension et le courant nominal des fusibless et des disjoncteurs.

Braking Unit

UL Type	Type	Voltage	Product Capacity	Brake unit	Exterior and Terminal Arrangement
UL type	Type A	200V class	22.0kW	SV220DBU-2U	Refer to group 1
			37.0kW	SV370DBU-2U	
			55.0kW	SV550DBU-2U	
		400V class	37.0kW	SV370DBU-4U	
			55.0kW	SV550DBU-4U	
			75.0kW	SV750DBU-4U	
Non-UL Type	Type B	400V class	75.0kW	SV750DB-4	Refer to group 2
			220kW	SV2200DB-4	Refer to group 3
	Type C	200V class	22.0kW	LSLV0220DBU-2LN	Refer to group 4
			37.0kW	LSLV0370DBU-2LN	
				LSLV0370DBU-2HN	Refer to group 5
			75.0kW	LSLV0750DBU-2LN	Refer to group 4
				LSLV0750DBU-2HN	Refer to group 5
		400V class	37.0kW	LSLV0370DBU-4LN	Refer to group 4
				LSLV0370DBU-4HN	Refer to group 5
			75.0kW	LSLV0750DBU-4LN	Refer to group 4
				LSLV0750DBU-4HN	Refer to group 5

Note
- Make sure to check the changes in the user manual of the relevant braking unit before use.
- Check the user manual of each braking unit for resistance values of Type A, B and C.

Terminal Arrangement for the Braking Unit

The terminal arrangement of the braking unit is as the following groups:

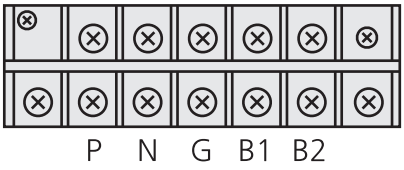

[Terminal Arrangement for the Braking Unit - Group 1]

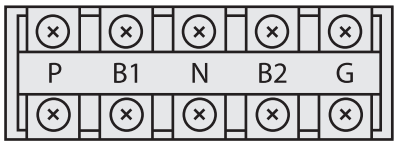

[Terminal Arrangement for the Braking Unit - Group 2]

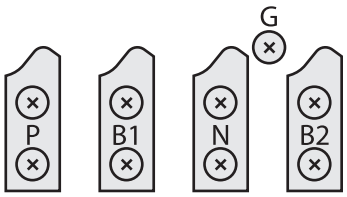

[Terminal Arrangement for the Braking Unit - Group 3]

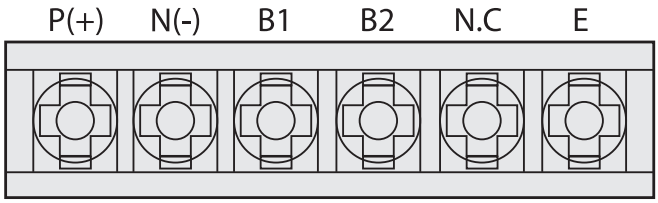

[Terminal Arrangement for the Braking Unit - Group 4]

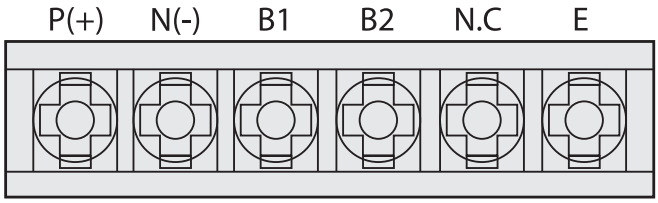

[Terminal Arrangement for the Braking Unit - Group 5: A Frame
(200 V Class 37 kW, 400 V Class 37 kW/75 kW)]

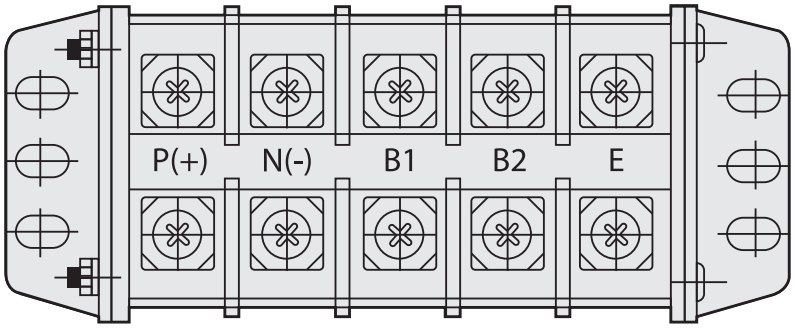

[Terminal Arrangement for the Braking Unit - Group 5: B/C Frame
(200 V Class 75 kW]

Terminal Name	Functionality
P	Terminal that connects to inverter terminal P
P(+)	
N	Terminal that connects to inverter terminal N
N(-)	
G	Ground Terminal
E	
B1	Terminal that connects to B1 in the braking resistor
B2	Terminal that connects to B2 in the braking resistor
N.C	Terminal not used
P/B1	Terminal that connects to inverter terminal P2 or P/ terminal that connects to B1 in the braking resistor

Basic wiring diagram for braking unit and braking resistor

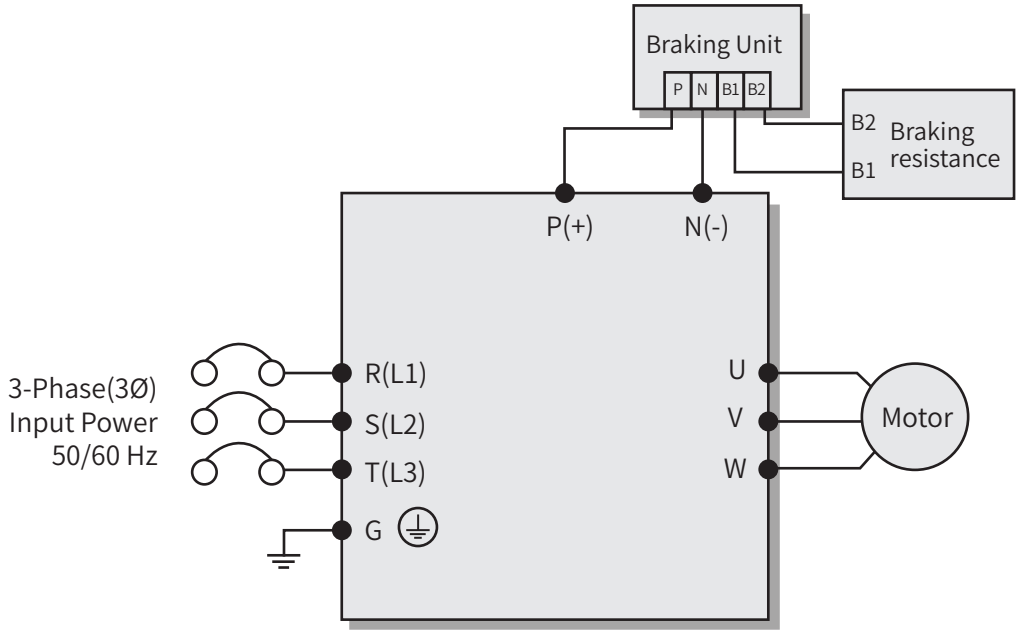

[Basic Wiring Diagram of Braking Unit and Braking Resistor]

Braking Resistor Terminal

Braking Resistor Terminal	Terminal Description
B1, B2	Wire correctly referring to the wiring diagram. Wire braking (DB) resistor to B1 and B2 terminals in the braking unit.

Braking Resistor Specifications

Model LSLV□□□□	Reference Braking Unit	Braking resistance					
		100% Torque			150% Torque		
		Resistance (Ω)	Capacity (kW)		Resistance (Ω)	Capacity (kW)	
			ED 5%	ED 10%		ED 5%	ED 10%
0004S300-2	-	400	0.05	0.1	300	0.1	0.2
0008S300-2	-	200	0.1	0.2	150	0.15	0.3
0015S300-2	-	100	0.2	0.4	60	0.3	0.6
0022S300-2	-	60	0.3	0.6	50	0.4	0.8
0040S300-2	-	40	0.5	1	33	0.5	1
0055S300-2	-	30	0.6	1.2	20	0.8	1.6
0075S300-2	-	20	0.8	1.6	15	1.2	2.4
0110S300-2	-	15	1.2	2.4	10	2	4
0150S300-2	-	10	2	4	8	2	4
0185S300-2	-	10	2	4	5	3.6	7.2
0220S300-2	LSLV0220DBU-2LN	8.4	2	4	5.0	3.6	7.2
0300S300-2	LSLV0370DBU-2HN	6.0	3	6	4.0	4	8
0370S300-2	LSLV0370DBU-2HN	5.0	3.6	7.2	3.4	5	10
0450S300-2	LSLV0750DBU-2HN	4.0	4	8	2.8	6	12
0550S300-2	LSLV0750DBU-2HN	3.4	5	10	2.0	8	16
0750S300-2	LSLV0750DBU-2HN	2.4	6.4	12.8	1.6	9.6	19.2
0004S300-4	-	1800	0.05	0.1	1200	0.1	0.2
0008S300-4	-	900	0.1	0.2	600	0.15	0.3
0015S300-4	-	450	0.2	0.4	300	0.3	0.6
0022S300-4	-	300	0.3	0.6	200	0.4	0.8
0040S300-4	-	200	0.4	0.8	130	0.6	1.2
0055S300-4	-	120	0.6	1.2	85	1	2
0075S300-4	-	90	0.8	1.6	60	1.2	2.4
0110S300-4	-	60	1.2	2.4	40	2	4
0150S300-4	-	45	2	4	30	2.4	4.8
0185S300-4	-	35	2	4	20	3.6	7.2
0220S300-4	-	30	2.4	4.8	20	3.6	7.2
0300S300-4	-	20	3.6	7.2	16	5	10
0370S300-4	-	20	3.6	7.2	12	6.4	12.8
0450S300-4	LSLV0750DBU-4HN	16	4	8	10	6.4	12.8
0550S300-4	LSLV0750DBU-4HN	13.0	5	10	9.0	7.2	14.4
0750S300-4	LSLV0750DBU-4HN	10.0	6	12	6.8	9.6	19.2

Model LSLV□□□□	Reference Braking Unit	Braking resistance					
		100% Torque			150% Torque		
		Resistance (Ω)	Capacity (kW)		Resistance (Ω)	Capacity (kW)	
			ED 5%	ED 10%		ED 5%	ED 10%
0900S300-4	LSLV0900DBU-4HN	8.4	8	16	5.6	12	24
1100S300-4	LSLV1320DBU-4HN	6.4	9.6	19.2	4.6	15	30
1320S300-4	LSLV1320DBU-4HN	5.5	12	24	3.8	18	36
1600S300-4	LSLV1600DBU-4HN	4.8	15	30	3.2	20	40
1850S300-4	LSLV2200DBU-4HN	4.1	15	30	2.7	26	52
2200S300-4	LSLV2200DBU-4HN	3.4	20	40	2.3	30	60

Note

- Products that are less than 18.5 kW-200 V or 37 kW-400 V have a built-in braking unit by default and do not require separate installation.
- Refer to the user manual of each braking unit for more details on the specifications of the braking resistor applicable for the use of braking unit. Make sure you use the braking resistance value, watt, braking torque, and duty cycle described in the user manual of the braking unit.
- If you double the duty cycle (%ED) from the standard, you also need to double the rated watts of the separately installed resistor.
- Braking resistor is an object that heats up during braking. Make sure there is enough distance from the inverter when you install it.

Memo

SOLUTION SQUARE

EVERYTHING ABOUT **AUTOMATION ENGINEERING**



SOLUTION SQUARE provides technical information and training materials across a wide range of automation technologies.

SOLUTION SQUARE

Engineering Software-associated Services

Linked with Automation Software

Users can access graphic libraries and samples in the engineering software in a few clicks.



Simple Software Updates

Check the latest information and keep your software up-to-date .



Quick and Easy Search for Automation Technologies

Getting Effective Search Results

Quick and easy search for up-to-date content of products and technologies



Mobile Friendly

Optimized for web and mobile



Search SOLUTION SQUARE on Google. Visit at sol.ls-electric.com

Headquarter
127 LS-ro (Hogye-dong) Dongan-gu, Anyang-si, Gyeonggi-Do, 14119, Korea

Seoul Office
LS Yongsan Tower, 92, Hangang-daero, Yongsan-gu, Seoul, 04386, Korea
TEL: 82-2-2034-4916, 4684, 4429

C/Montcada 7, Pol. Ind. Les Pereres
08130 Santa Perpètua de Mogoda
Barcelona - Spain

Tel. +34 935 748 206
info@vectorenergy.com
www.vectorenergy.com

Specifications in this catalog are subject to change without notice due to continuous product development and improvement

ⓒ 2024. 11 LS ELECTRIC Co., Ltd. All rights reserved. / English (01) 2024. 11 Human Power