

Beyond X™

Susol VCB

Vacuum Circuit Breakers



vector Energy

LS ELECTRIC

Susol Super Solution

VCB

Vacuum Circuit Breakers





Susol

Vacuum Circuit Breakers





Susol VCB is full line-up new VCB which has the high interrupting capacity, large current(~50kA, ~4000A), and maximized compatibility with existing products through the dual phases and compact sized models.

Contents

External structure	26
Basic features and interrupting operation	28
Standards and certification	31
Types and ordering information	32
Type of circuit breakers	42
Ratings	46
Accessories	59
Control circuit diagrams	93
Dimensions	97
Technical data	256

Susol VCB

Vacuum Circuit Breaker, VCB is installed in the medium voltage distribution lines to protect life and load equipment. In case of accidents such as over current, short circuit and ground fault current, VCB works by interrupting the circuit through the inner Vacuum Interrupter which is acted by signal from the outside separate relay.

LS ELECTRIC' Super Solution, Susol VCB responds.

- customer needs for the breakers with high interrupting capacity and large current due to the integration and increase of the load capacity.
- worldwide trend of diversification in the medium voltage distribution lines.
- increase of the reliability for the temperature characteristics of circuit breakers.

Premium-type products to improve convenience and reliability of medium voltage switchgear configuration.

- full line-up modeling to the high interrupting capacity and large current.
- main structure with high reliability application.
- a variety of accessories and ability to maximize.

Suitable for use as the main circuit breaker to protect key installations in the places such as device industry, power plants, high-rise buildings, large ships.





▶ Strengthening of the high interrupting capacity and large current models and full line-up new VCB models to high/middle/low.

Voltage	Interrupting current	Rated current
7.2kV	8/12.5/20/25/31.5/40/50kA	400/630/1250/2000/3150/4000A
12kV	20/25/31.5/40/50kA	630/1000/1250/2000/2500/3150/4000/5000
17.5kV	20/25/31.5/40/50kA	630/1000/1250/2000/2500/3150/4000A
24kV	12.5/25/31.5/40kA	630/1250/2000/2500/3150A
25.8kV	12.5/16/25/31.5/40kA	630/1250/2000/3150A
36kV	25/31.5/40kA	1250/2000/3150A

▶ Main circuit structure with high reliability.

- Maximizing the durability and reliability of the main circuit contactors (Stego Tulip contactor).
- Strong structure for the temperature rise (Natural cooling system).

▶ Convenience of switchgear configuration and a variety of accessories.

- CB compartment structure: Metal isolation structures to prevent the accident spread and ensure safety. And the convenience of switchgear building is extended by its module style.
- A variety of accessories: UVT, Locking Magnet, Plug Interlock, Key lock, Temperature Sensor, MOC, TOC, Earthing S/W.
- Maximizing compatibility with existing products through the dualistic deployment of phases and compact models.



Susol VCB Family

Susol VCB series are premium-type products featuring main structure with high reliability application and a variety of accessories and ability to maximize to be suitable for use as the main circuit breaker to protect key installations in the places such as device industry, power plants, high-rise buildings, large ships

7.2kV (VL-06)

- Rated short-time (for withstand current): 3sec.
- Rated operating sequence: O-0.3s-CO-15s-CO
- Type test level: M2, E2 (List1), C2
- 100% Compatibility
  - with existing fixed type breakers
  - with existing drawout type breakers
- Various cradle: E, F and G type
- A variety of control power
  - DC 24~30V, DC 48~60V, DC 110V, DC 125V, DC 220V
  - AC 48V, AC 100~130V, AC 220~250V
- A variety of accessories
  - Charge switch, UVT, Secondary trip Coil, Current trip coil, Position S/W
  - Key-lock, Button lock, Button cover, Padlock, UVT, Time Delay Controller, CTD
- Anti Pumping Device
- TEST/SERVICE Automatic Position Indicator
- Standards and certification
  - IEC62271-100 (2012) [M2, C2, E2 (List1)]
  - Tested in enclosure
  - KERI type tested, V-check (KESCO) certification



Ur (kV)	Isc (kA)	Ir (A)
7.2	8	400
	12.5	630

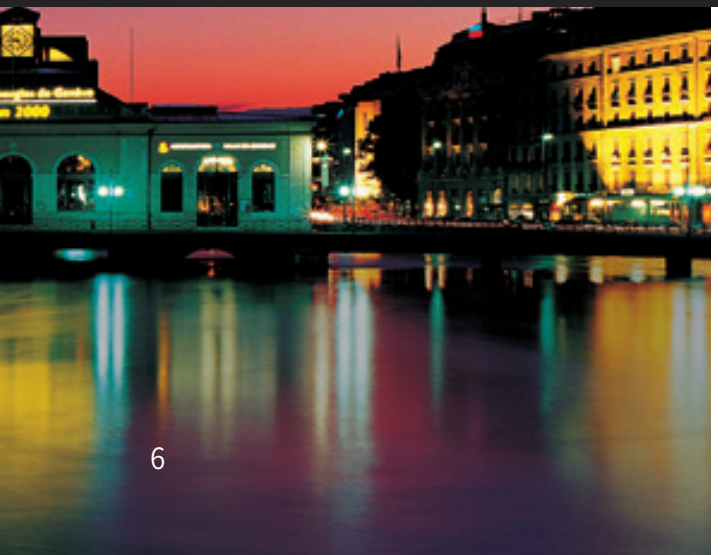

Full line-up & Compact

Full line-up new VCB models to the high interrupting capacity and large current (~ 50kA, ~ 5000A) featuring maximization of compatibility with existing products through the dualistic deployment of phases and compact models

7.2/12/17.5/24/25.8/36kV (VL-06/12/17/20/25/36)

- Rated short-time (to withstand current): 3sec. 4sec *
- Rated operating sequence: O-0.3s-CO-15s-CO
- Type test level: M2, E2 (List3), C2
- Compatibility with existing Pro-MEC breakers
- Various cradle: E, F, G, Fs, Gs and H type
- CB Compartment for MCSG available
- A variety of control power
  - DC 24~30V, DC 48~60V, DC 110V, DC 125V, DC 220V
  - AC 48V, AC 100~130V, AC 220~250V
- A variety of accessories
  - VCB part: Charge switch, UVT, Secondary trip coil, Position switch, Locking magnet, Plug interlock, Key lock, Button cover, Button padlock, Padlock (H type Door interlock), MOC
  - Cradle part: MOC (Mechanical Operated Cell switch), TOC (Truck Operated Cell switch), Temperature sensor, Earthing switch & Accessories, Door, Door interlock, Door emergency button
  - Others: Racking in/out handle, UVT Time delay controller, CTD (Condensor Trip Device), Temperature module
- Anti Pumping Device
- TEST/SERVICE Automatic Position Indicator
- Standards and certification
  - IEC62271-100 (2012) [M2, C2, E2 (List3)]
  - KEMA, KERI type tested, V-check (KESCO) certification

Note) * Please contact us



Ur (kV)	Isc (kA)	Ir (A)
7.2	20	630
		1250
		2000
	25	630
		1250
		2000
	31.5	630
		1250
		2000
12	20	630
		1000
		1250
		2000
	25	630
		1000
		1250
		2000
	31.5	630
		1250
		2000
		2500
17.5	20	630
		1250
		2000
	25	630
		1250
		2000
	31.5	630
		1250
		2000
		2500
24, 25.8	12.5	630
		1250
	16	630
		1250
	25	630
		1250
		2000
		2500
36	25	630
		1250
		2000
		2500

7.2/12/17.5/24/25.8/36kV (VH-06/12/17/20/25/36)

- Rated short-time (to withstand current): 3sec. 4sec *
- Rated operating sequence: O-0.3s-CO-15s-CO, (O-0.3s-CO-3min-CO **)
- Type test level: M2, E2 (List3), C2
- Electrical and mechanical life: 20,000 operations
- Various cradle: K, Fs, Gs and H type
- CB Compartment for MCSG available
- A variety of control power
  - DC 48V, DC 110V, DC 125V, DC 220V
  - AC 48V, AC 110V, AC 220V
- A variety of accessories
  - VCB part: UVT, Secondary trip coil, Latch checking switch, Position switch, Locking magnet, Plug interlock, Key lock, Button cover, Button padlock, Padlock (H type Door interlock), MOC
  - Cradle part: MOC (Mechanical Operated Cell switch), TOC (Truck Operated Cell switch), Temperature sensor, Earthing switch & Accessories, Door, Door interlock, Door emergency button
  - Others: Racking in/out handle, Lifting hook, UVT Time delay controller, CTD (Condensor Trip Device), Temperature module
- Anti Pumping Device
- Standards and certification
  - IEC62271-100 (2012) [M2, C2, E2 (List3)]
  - KEMA, KERI type tested, V-check (KESCO) certification

Note) * Please contact us
** Please refer to ratings



Ur (kV)	Isc (kA)	Ir (A)
7.2 12	31.5	1250
		2000
		3150
	40	1250
		2000
		3150
		4000
	50	1250
		2000
		2500
		3150
		4000
17.5	31.5	3150
		1250
	40	2000
		3150
	50	1250
		2000
		2500
		3150
24 25.8	25	2500
	31.5	1250
		2000
		3150
	40	1250
		2000
		3150
36	25	1250
		2000
		3150
	31.5	1250
		2000
		3150
	40	1250
		2000
		3150

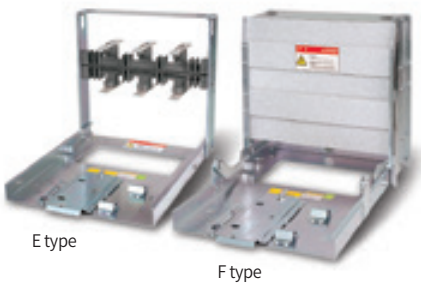

E type

F type



H type

VCB Cradle type

Main circuit structure with high reliability

Susol VCB

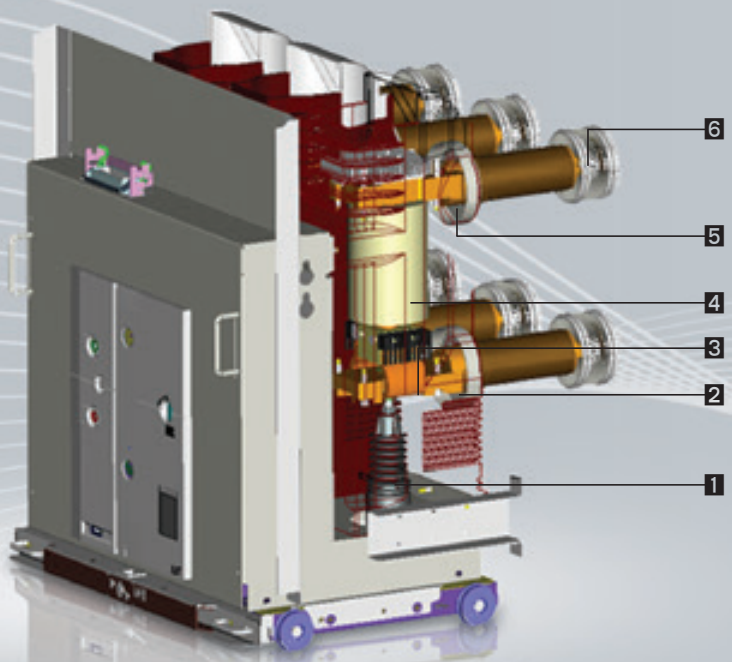

Breaker

1 Insulation rod
2 Lower terminal
3 Shunt
4 Vacuum interrupter
5 Upper terminal
6 Tulip contactor



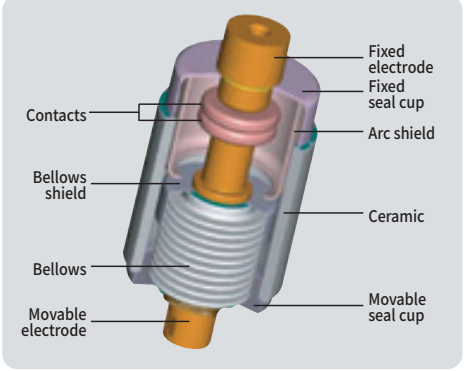

Vacuum Interrupter, VI

The vacuum rate within the VI is very high (approximately $5x10^{-5}$ Torr) and the spacing between fixed contact and movable contact is about 6~20mm, depending on the voltage.
The contacts are in a structure that arc can easily be extinguished and the surfaces of the contacts are made of special alloy (copper-chromium) and the interior is completely sealed to prevent loss of vacuum.
Therefore the wearing of the contacts can be minimized in the event of short-circuit and the arc energy by overvoltage or switching can be reduced effectively.

Convenience and Variety

- Maximizing the durability and reliability of the main circuit contactors (Stego Tulip contactor)
- Strong structure for the temperature rise (Natural cooling system)









Stego Tulip

Main circuit structure with high reliability

- Maximizing the durability and reliability of the main circuit contactors (Stego Tulip contactor)
- Strong structure for the temperature rise (Natural cooling system)

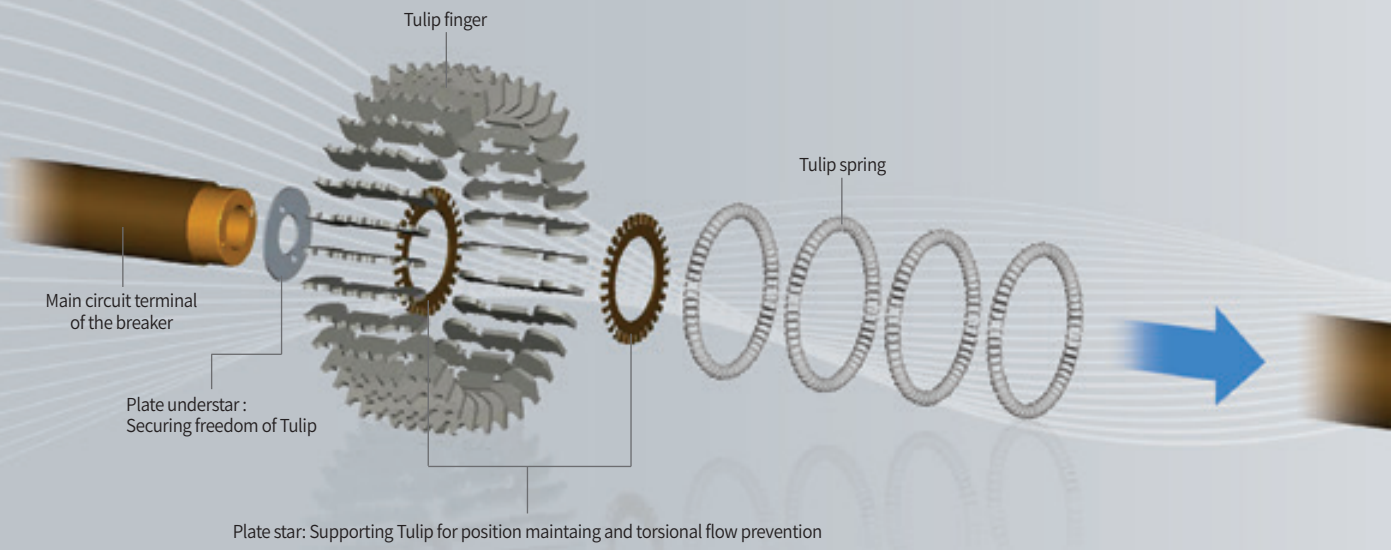

Structure of Stego Tulip Terminal

- Maintaining the connection between breaker and cradle for the optimum current path through securing freedom of Tulip.
- Increasing the heat dissipation area of the contactors and minimizing aging.





Major supply records

- S Electro-Mechanics, Busan plant: 12kV 40kA 4000A VCB
- P Combined cogeneration power plant: 7.2kV 50kA 4000A VCB
- K Petrochemical, Ulsan plant: 7.2kV 40kA 4000A VCB
- P Steel plant, Gwangyang: 7.2kV 50kA 4000A VCB
- P Steel plant, Pohang: 7.2kV 50kA 4000A VCB
- L Chem, Cheongju plant: 7.2kV 40kA 4000A VCB
- S Electronics, Tangjeong plant: 7.2kV 40kA 4000A VCB

7.2/12/17.5/24/25.8/36kV...
(VH-06/12/17/20/25/36)



- Drawout / natural cooling system
- Improved temperature characteristics and ensured high reliability

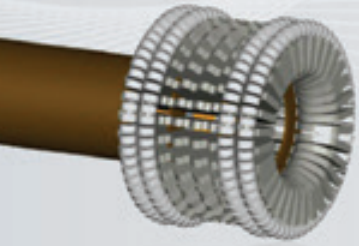

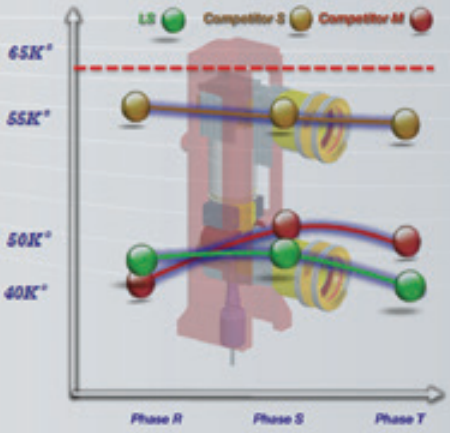





VL type Tulip contactor



VH type Tulip contactor



36kV Tulip contactor

CB Compartment

Convenience in building switchgears

- CB compartment structure: H type cradle
- Metal isolation structure to prevent the accident spread and ensure safety
- Convenience of switchgear building





7.2/12/17.5/24/25.8/36kV 20/25/31.5/40/50kA

- Metal isolation structure to prevent the accident spread and ensure safety
- Convenience of operation by Truck
  - Drawable in the closed position of the switchgear door
  - Racking-in/out positions indicated mechanically
- Equipped with safety devices and accessories
  - Control power connected Interlock
  - Earthing S/W and interlock, MOC/TOC (ANSI)
- Convenience in building switchgears
  - Module assembly with CB compartment





Accessories of CB compartment (H type cradle)

- MOC (Mechanism Operated Cell S/W)
- TOC (Truck Operated Cell S/W)
- Shutter Padlock
- Temperature Sensor
- Door Emergency ON/OFF Button
- Earthing switch & Accessories
  Key lock for Earthing S/W
  Locking Magnet for Earthing S/W
  Position S/W for Earthing S/W
- TM (Temperature Monitoring Unit)

Cradles

E, F, G, K and H type... Variety of the Cradles

F type

E type

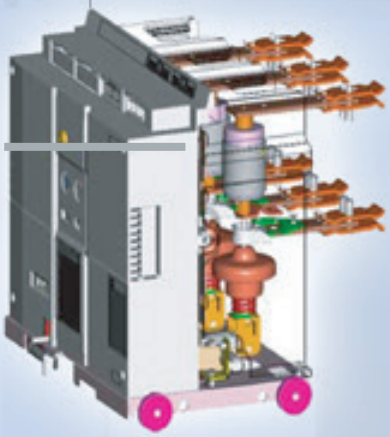

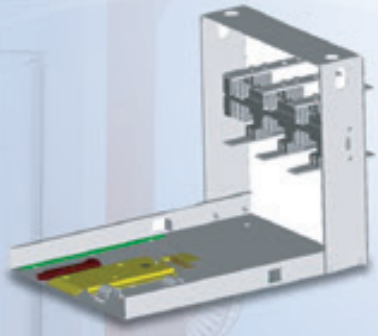

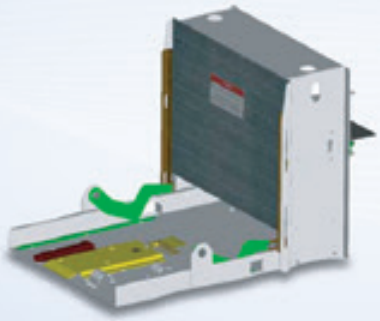

E type

- Economic style cradle with the basic structure
- No safety shutter and bushing
- For MESG
- Applies VL type VCB

F type

- Safety shutter has been added to the cradle of type E
- No bushing
- For MESG
- Applies VL type VCB



E type



F type



H type

G type

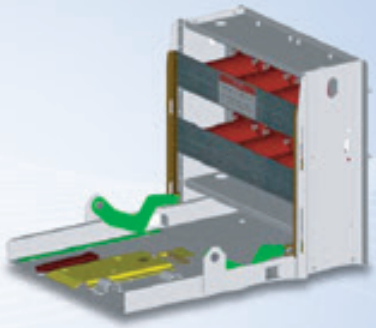

G type

- Premium style cradle with safety shutter and bushings
- For MESG
- Applies VL type VCB

K type

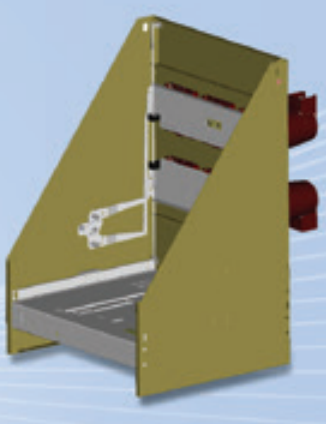

K type

- Premium style cradle with metal safety shutter and bushings
- Metal isolated structure: To prevent spreading accident and secure safety
- More convenient by withdrawable Truck
- For MCSG
- Applied to medium capacity/high capacity VCB

H type

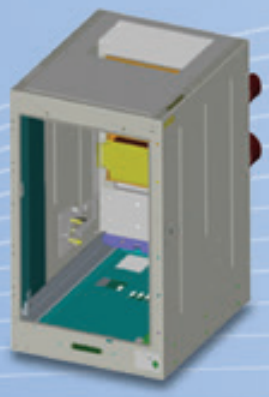

H type

- Metal isolation structure to prevent the accident spread and ensure safety
- Convenience of operation by Truck
  - Drawable in the closed position of the switchgear door
  - Racking-in/out positions indicated mechanically
  - Control power connected Interlock
- Convenience in building switchgears
  - Module assembly with CB compartment
  - Assembly with CT/PT integrated compartment
- Applies VL/VH type VCB
- Ha type
  - Height-reduction of a cradle suitable for two-high breaker arrangements of MCSG



Ha type



Hb type



VH type

Convenience

Convenience in building switchgears

- Maximizing compatibility with existing products through the dualistic deployment of phases and compact models.

VCB rating

Ur (kV)	Isc (kA)	Ir (A)
12	20/25	630
	31.5	1000
		1250
17.5	20/25	630
	31.5	1250

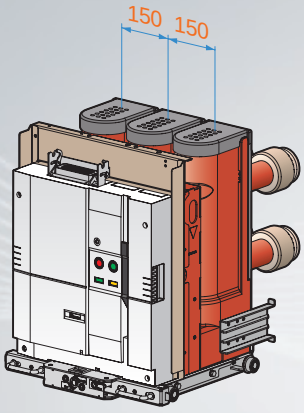

P150
(distance between phases: 150mm)

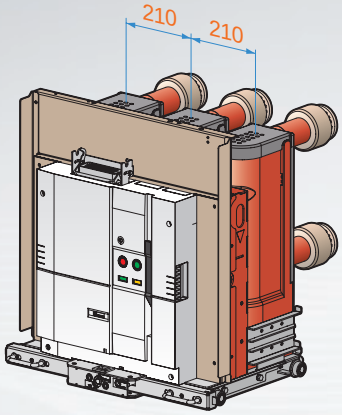

P210
(distance between phases: 210mm)

VCB rating

Ur (kV)	Isc (kA)	Ir (A)
12	20/25	2000
17.5	20/25	2000

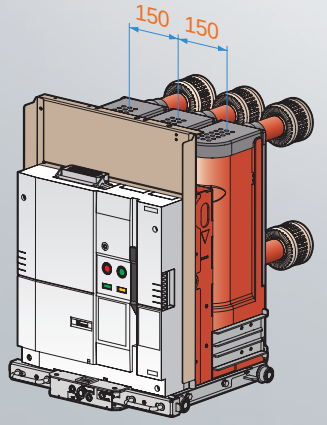

P150
(distance between phases: 150mm)

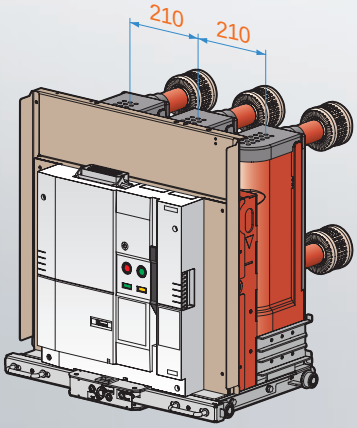

P210
(distance between phases: 210mm)

VCB rating

Ur (kV)	Isc (kA)	Ir (A)
12 17.5	31.5	2500

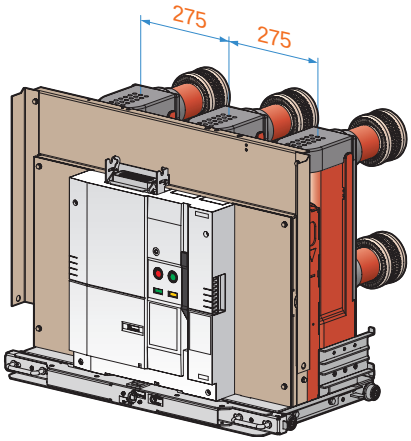

P275
(distance between phases: 275mm)

VCB rating

Ur (kV)	Isc (kA)	Ir (A)
24	12.5	630
		1250
	16/25	630
		1250
	25	2000
		2500 *
25.8	12.5	630
		1250
	16/25	630
		1250
	25	2000
		2500 *

* 2500A: phases distance 275mm only

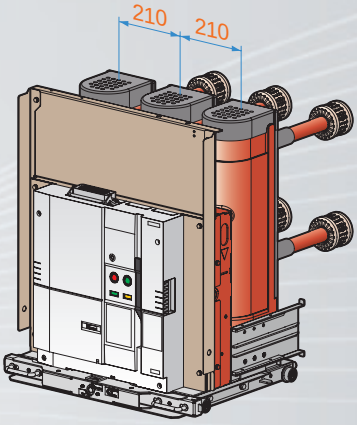

P210
(distance between phases: 210mm)

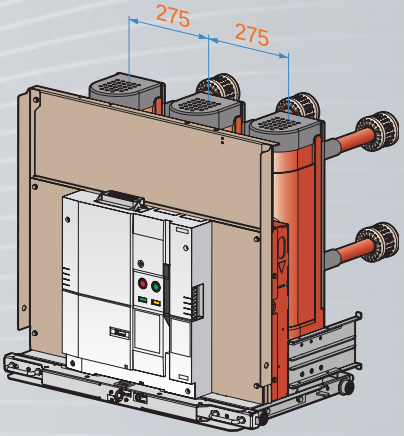

P275
(distance between phases: 275mm)

VCB rating

Ur (kV)	Isc (kA)	Ir (A)
24	31.5/40	2000
25.8	31.5/40	2000

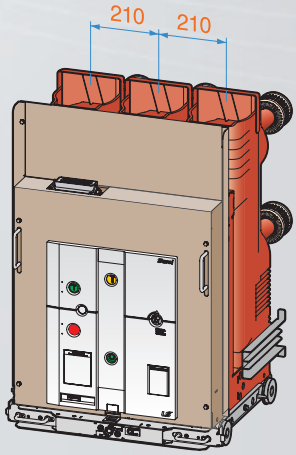

P210
(distance between phases: 210mm)

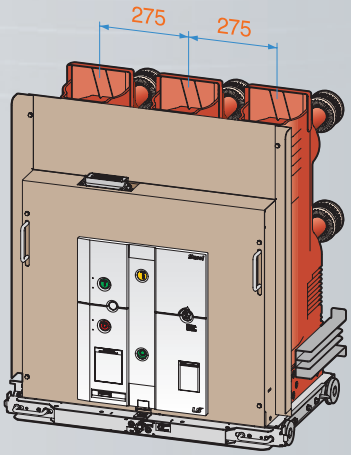

P275
(distance between phases: 275mm)

Function to locking a breaker during transport of a switchgear

- Fixed bracket must be dismantled first to rack in a breaker - interlocking system

Fix braket easily visible from the front of the breaker

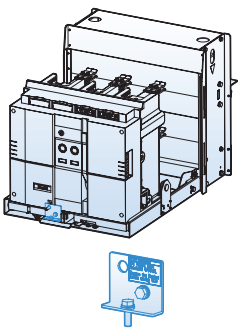

VL type VCB (VL-06)
(E/F/G type)

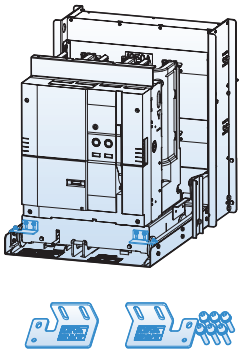

VL type VCB (VL-06/12/17)
(E/F/G type)

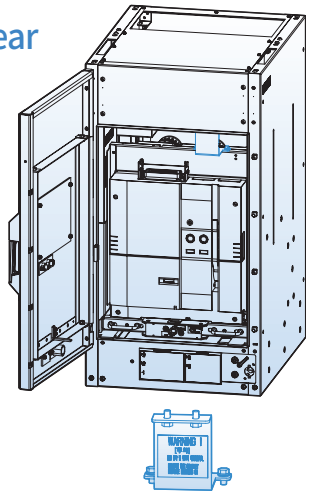

VL/VH type VCB
(H type CB compartment)

Accessories

A variety of accessories for VL-06

If accessories are attached to the breaker, the function of the breaker is upgraded. Susol VCB provides a variety of accessories depending on the purpose.

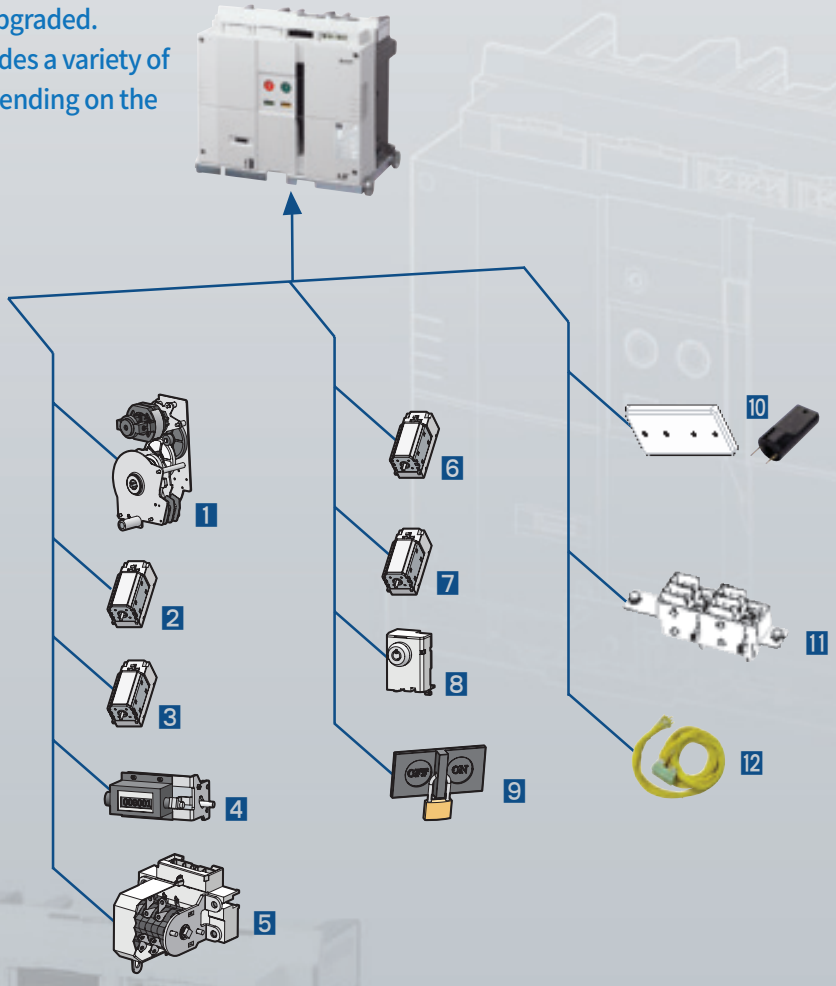

Breaker

1 Motor
2 Closing coil
3 Trip coil
4 Counter
5 Auxiliary contacts
6 UVT coil
7 Current trip coil
8 Key lock
9 Button padlock
10 Button cover
11 Position switch
12 Lead wire

A variety of accessories for VCL-06

If accessories are attached to the cradle, the function of the breaker is upgraded. Susol VCB provides a variety of accessories depending on the purpose.



Cradle

1 Handle for Racking-in and out
2 UVT time delay controller
3 Condenser trip device

Accessories

A variety of accessories for VL-06/12/17/20/25/36

If accessories are attached to the breaker, the function of the breaker is upgraded. Susol VCB provides a variety of accessories depending on the purpose.

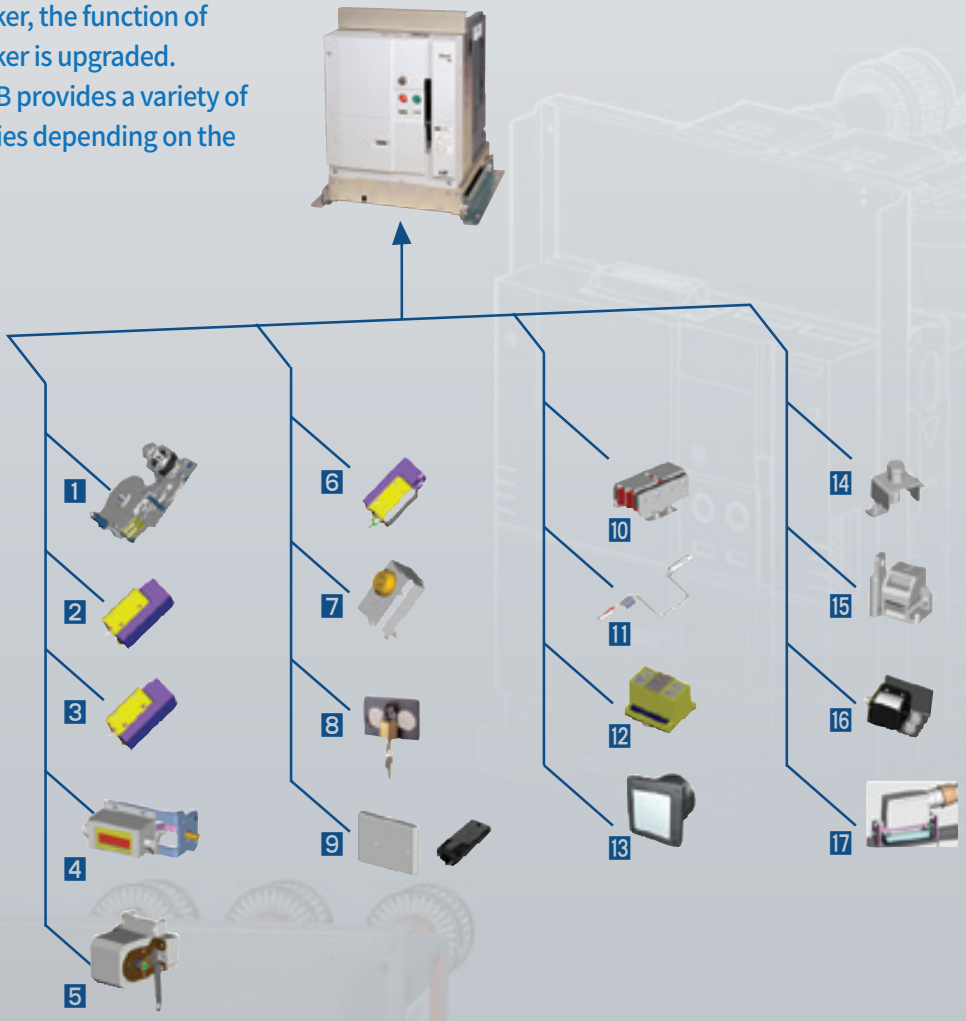

Breaker

1 Motor
2 Closing coil
3 Trip coil
4 Counter
5 Auxiliary contacts
6 UVT coil
7 Key lock
8 Button padlock
9 Button cover
10 Position switch
11 Handle for Racking-in/out
12 UVT time delay controller
13 CTD (Condenser trip device)
14 MOC (Mechanism operated cell switch)
15 Padlock (H type Door Interlock)
16 Locking magnet
17 Plug Interlock

A variety of accessories for VL-06/12/17/20/25/36

If accessories are attached to the cradle, the function of the breaker is upgraded. Susol VCB provides a variety of accessories depending on the purpose.

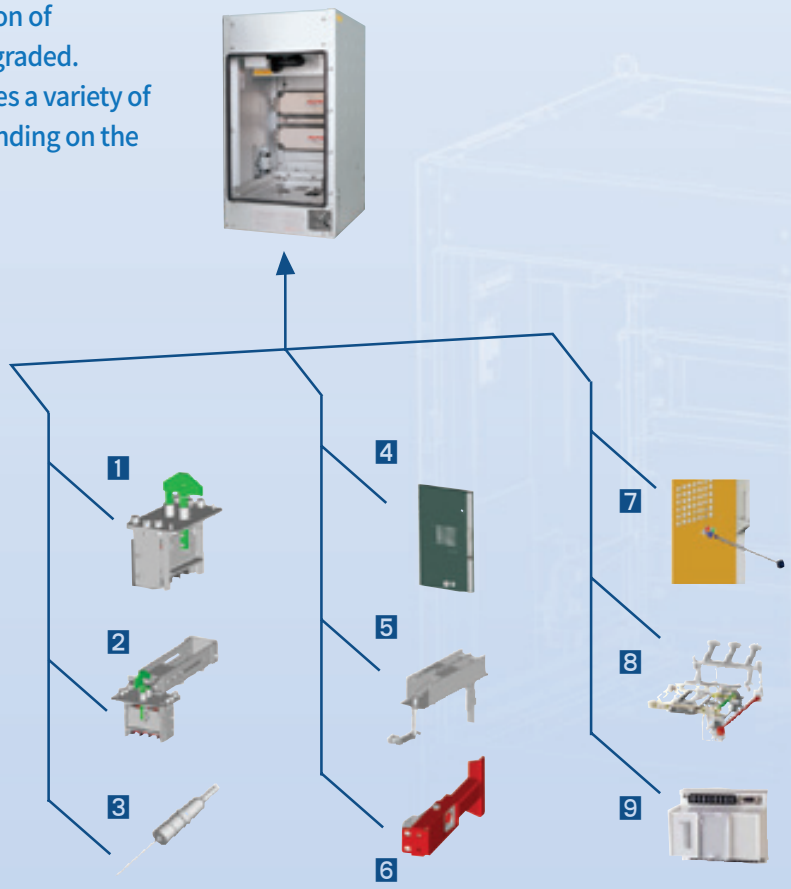

Cradle (H type)

1 TOC (Truck operated cell s/w)
2 MOC (Mechanical operated cell s/w)
3 Temperature sensor
4 Door
5 Door interlock
6 Shutter padlock
7 Emergency ON/OFF button
8 Earthing switch & Accessory
8-1 Key lock for Earthing switch
8-2 Locking Magnet for Earthing switch
8-3 Position s/w for Earthing switch
9 TM (Temperature monitoring unit)

Accessories

A variety of accessories for VH-06/12/17/20/25/36

If accessories are attached to the breaker, the function of the breaker is upgraded. Susol VCB provides a variety of accessories depending on the purpose.

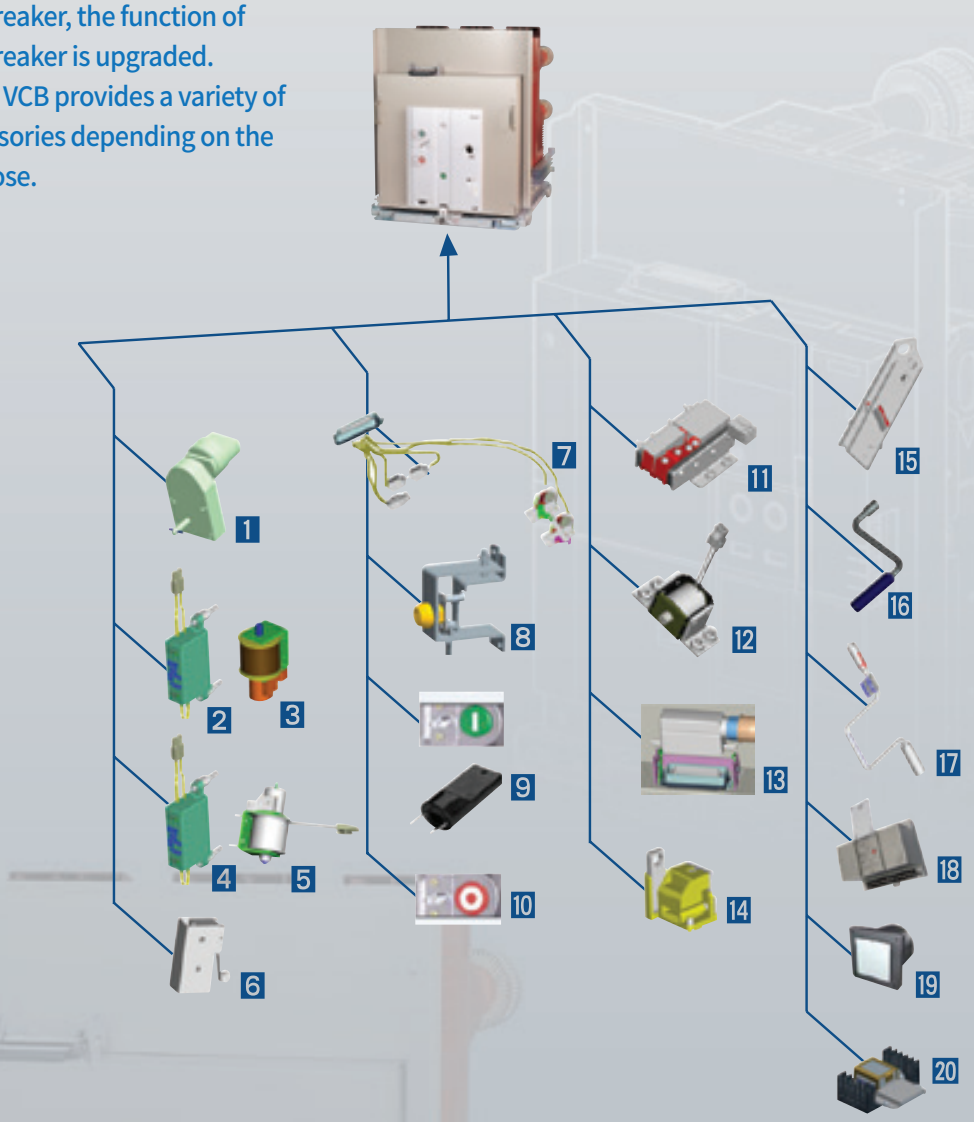

Breaker

1 Motor
2 AC/DC coil rectifier
3 Trip coil/Closing coil
Secondary trip coil
4 AC/DC UVT coil rectifier
5 UVT coil
6 Latch checking switch
7 Auxiliary contact wire
8 Key lock
9 Button cover/Push bar
10 Button padlock
11 Position switch
12 Locking magnet
13 Plug interlock
14 Door Interlock for withdrawable type
15 Lifting hook
16 Charge handle
17 Racking in/out handle
18 UVT Time delay controller
19 CTD (Condenser trip device)
20 Wireless Temp. monitoring sensor

A variety of accessories for VH-06/12/17/20/25/36

If accessories are attached to the cradle, the function of the breaker is upgraded. Susol VCB provides a variety of accessories depending on the purpose.

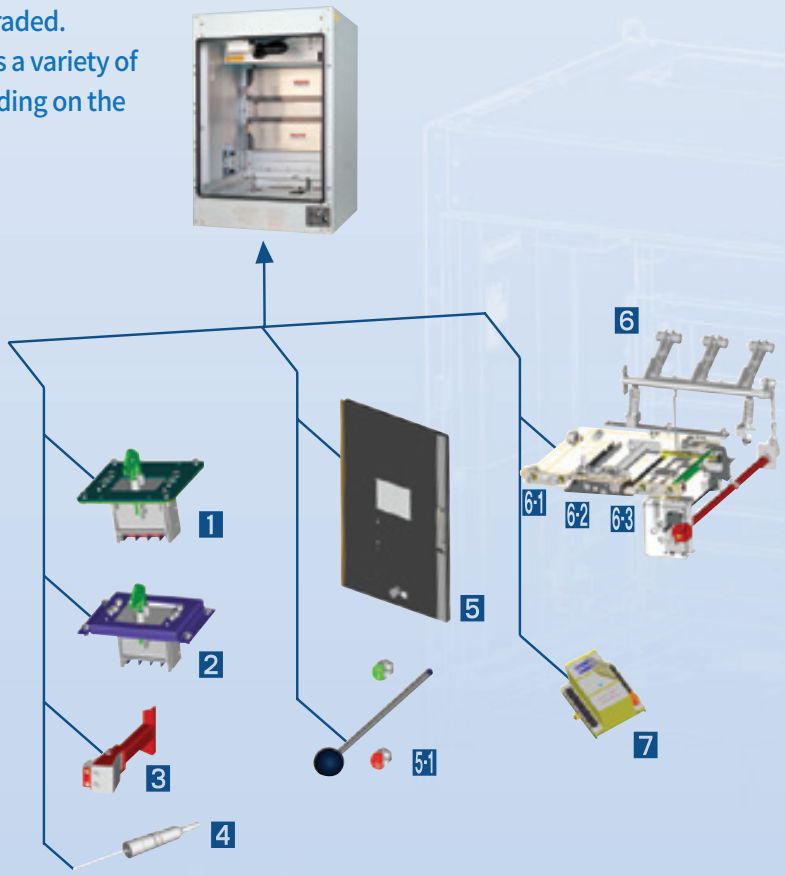

Cradle (H type)

1 MOC (Mechanism operated cell switch)
2 TOC (Truck operated cell switch)
3 Shutter padlock
4 Temperature sensor
5 Door
5-1 Emergency ON/OFF button
6 Earthing switch & Accessories
6-1 Key lock for Earthing switch
6-2 Locking magnet for Earthing switch
6-3 Position switch for Earthing switch
7 TM (Temperature monitoring unit)

Standards and certifications

E2 (List 1 or List3)

E2 (List3) is first proposed in the IEC 62271-100(2008) to improve the efficiency of the interrupting test. According to it the number of interrupting test T60 is increased instead of fewer number of T10 and T30 compared to the existing List1. List3 compared with the List1 maintains the equivalent of the test but has severe test conditions because 34% higher arc energy applied to the breaker. List3 is applied to Susol VCB series.

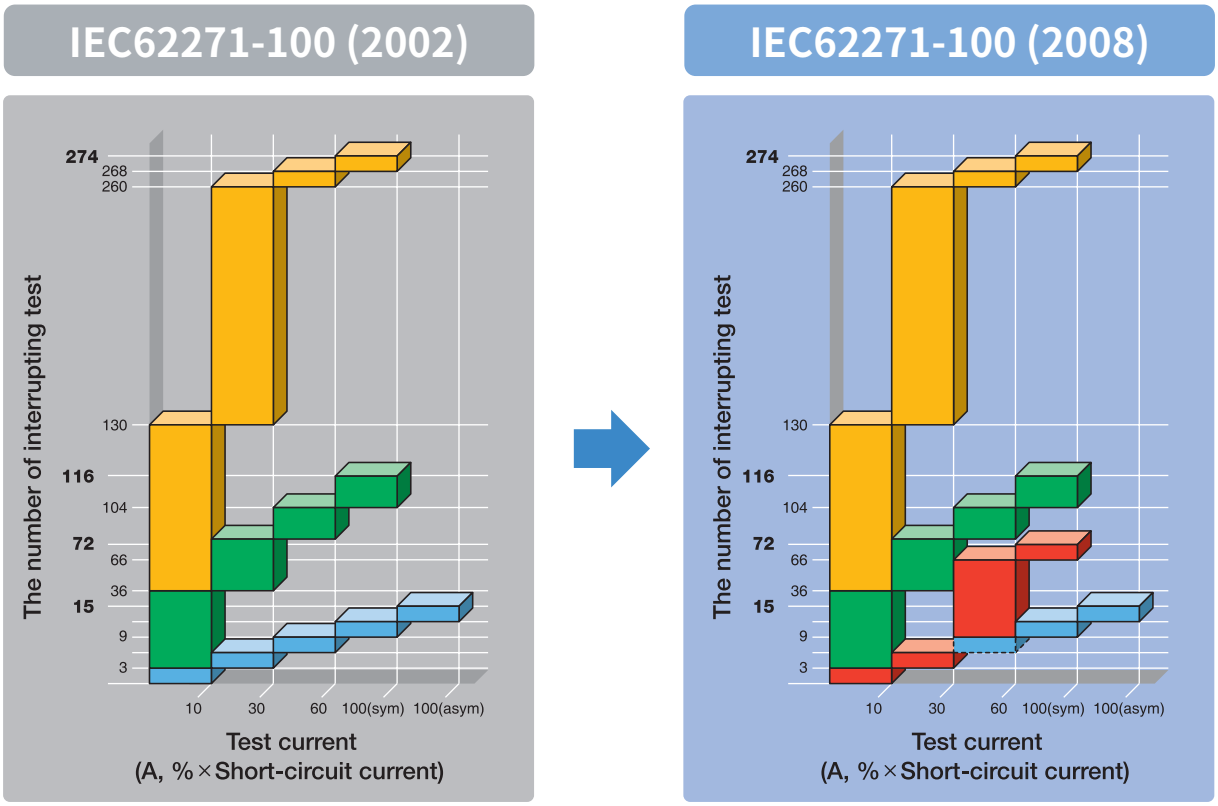

Arc Energy: List 1 (100%) < List 2 (125%) < List 3 (134%)

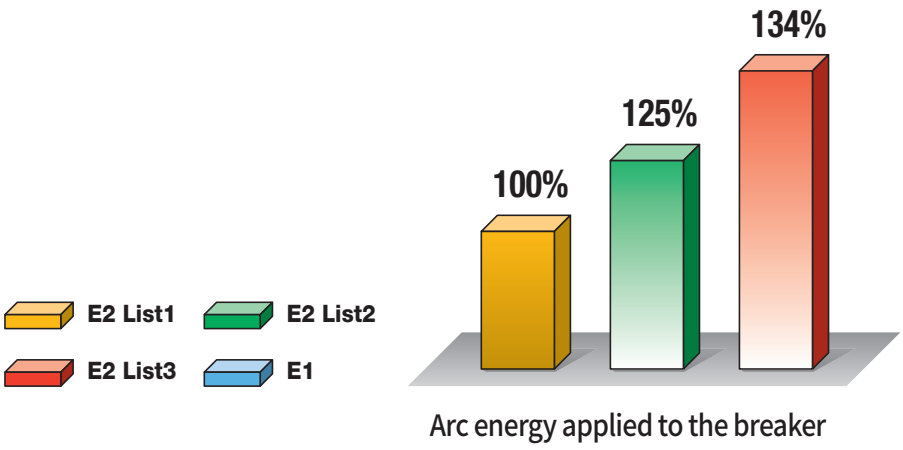

Arc energy applied to the breaker

M2, C2

IEC standards to verify the relibilty of the product allows to select the quality level for the product to be tested according to its real performance and practical usage. The highest quality level of M2, C2 has been applied to Susol VCB.

M1 and M2: Test to determine the mechanical durability grade

2000 operation test		
Sequence	Control Voltage	Number of operations
C-O	85%	500
C-O	100%	500
C-O	110%	500
O-CO-C	100%	250



- Pre-test (characteristics, isolation, and temperature)
- Confirmative tests after the completion of 2000 operations (Characteristics, isolation, temperature)



- Pre-test (characteristics, isolation, and temperature)
- Confirmative tests after every 2000 operation
- Confirmative tests after the completion of 10,000 operations (Characteristics, isolation, temperature)

C1, C2: Capacitive current breaking test is to verify the probability of restriking and C2 class is secured for all Susol VCB.



2 restrikes are allowed during “O” 24 operations and “CO” 24 operations



Restrike is not allowed during “O” 24 operations and “CO” 24 operations

External structure of VCB

Breaker ... VL type



Name of each part

1. Push ON Button
2. Push OFF Button
3. Charge/Discharge Indicator
4. ON/OFF Indicator
5. Manual Charging Handle
6. Key Lock
7. Operation Counter
8. TEST/SERVICE Position Indicator

Back side



Breaker ... VH type

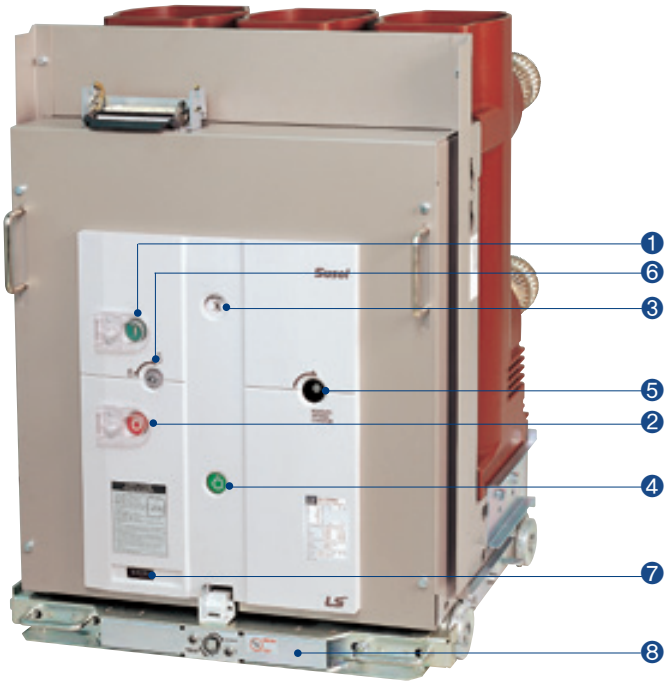

Name of each part

1. Push ON Button
2. Push OFF Button
3. Charge/Discharge Indicator
4. ON/OFF Indicator
5. Manual Charging Handle
6. Key Lock
7. Operation Counter
8. TEST/SERVICE Position Indicator

Back side



Basic functions

Manual operation

① Manual Charge

a) VL type: operate the charge handle 7-8 times as a fully stroke.
b) VH type: Insert the charge handle into the handle slot first. Rotate the handle clockwise 40 times more and then charge will be complete with a click sound.
- When the closing spring is charged fully "CHARGED" is displayed at the charge indicator.

② Manual closing

a) Pressing the ON button the breaker is closed.
b) With the closing of the breaker "ON" is displayed at Close/Trip indicator and "DISCHARGED" at the charge indicator.

③ Manual trip

a) Pressing the OFF button the breaker is opened.
b) "OFF" is displayed at Close/Trip indicator.

Electric operation

① Electric charge

The breaker is remotely closing with charging of closing spring.
If the breaker closing the closing spring is automatically charged by gear motors.

② Electric closing

Remote closing is operated by the closing coil.

③ Electric trip

Remote trip can be operated by the trip coil or UVT coil.

Main contacts are operated by the energy of the spring mechanism and closing spring is charged by the motor in the mechanism.
Breaker is closed by closing coil and tripped by trip coil.
These operations are repeated in VCB as shown in the below sequence chart.

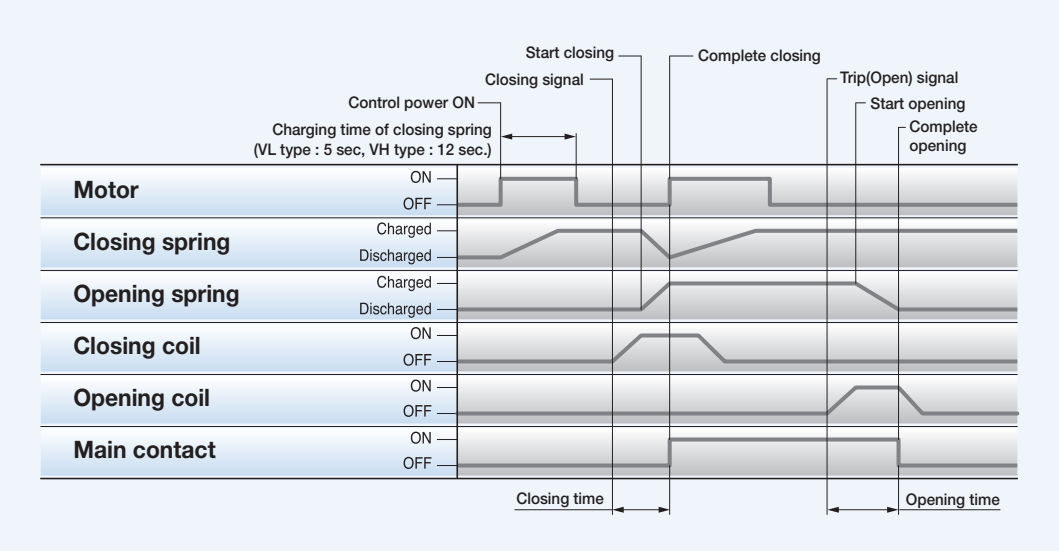

Sequence of the switching mechanism

The interruption of vacuum interrupters

The interruption of VCB is carried out by the vacuum interrupters.
Interrupter contacts as a key part made of copper - chromium (CuCr) material with spiral shape have low contact wear characteristics and withstand voltage is excellent.
Spiral contacts make the arc generated between the surfaces of contacts rotated around the surface of contact by the induced magnetic field generated due to the spiral contact structure, which results in preventing local heating, thereby corruption and interrupting instantaneously.

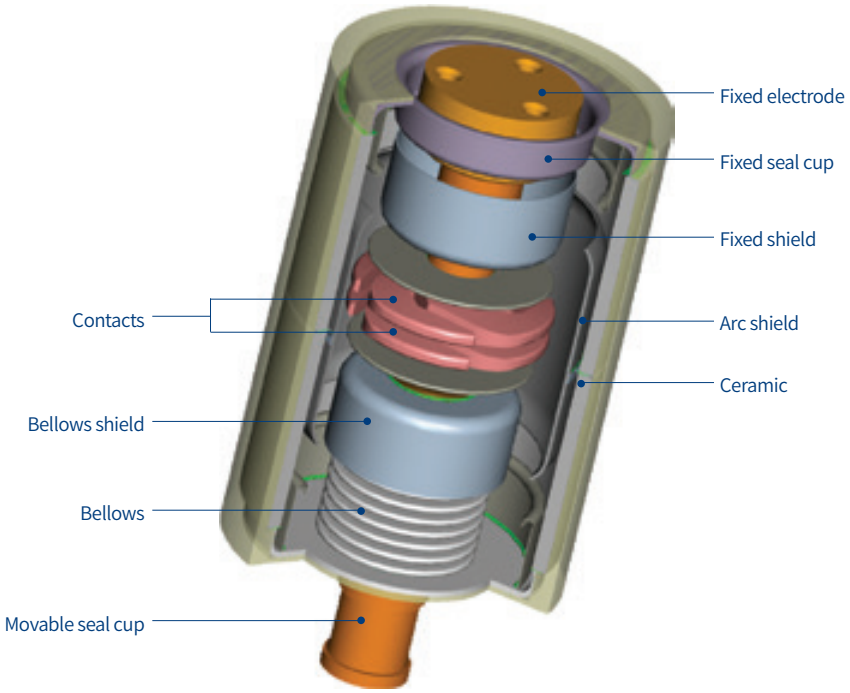

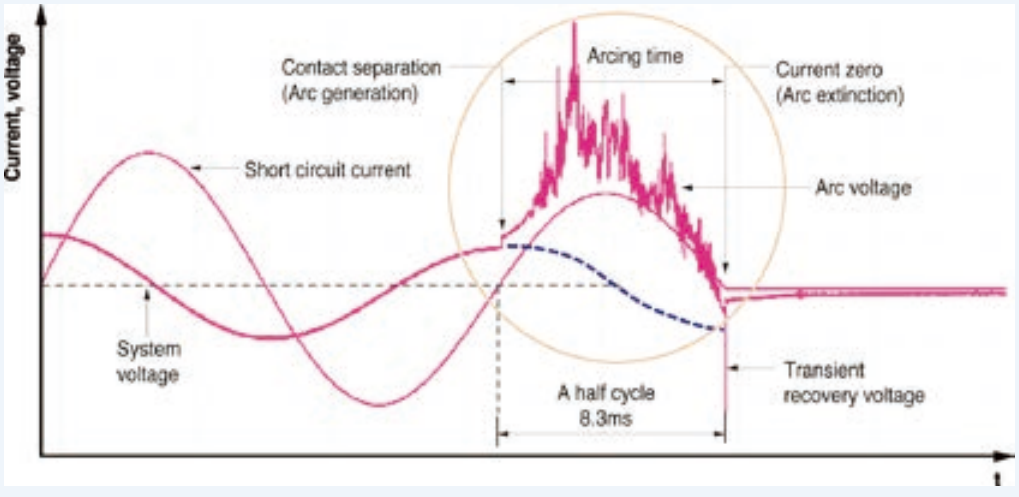

An example of oscillogram obtained through the interrupting test using LC resonant circuit

The interruption of vacuum interrupters

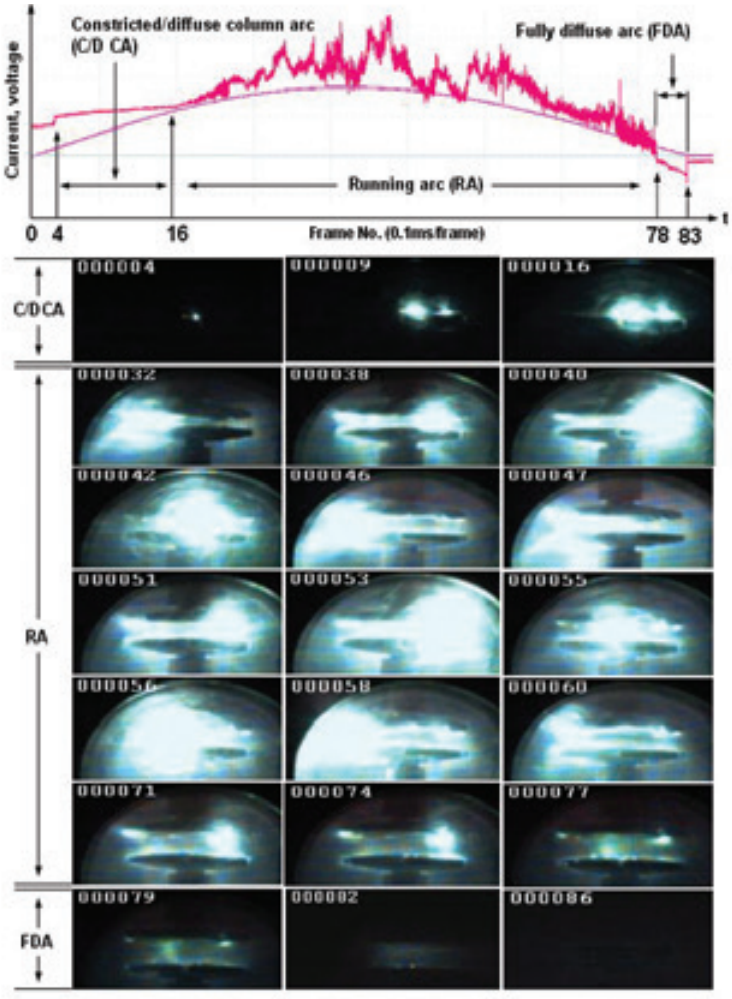

Arc voltage waveforms and arc image captured during arcing time

In case of using the flat contact any of the designs do not reflect on when contacts are opening the arc with high temperature is contracted and fixed in the center of the contacts,Which is called pinch effect.
To prevent the effect two kinds of contact shapes are designed.
One is Axial magnetic field which spreads the arc before its contraction, and the other is Radial magnetic field which permits the contraction of the arc but makes it rotated to disperse the energy.
Because contracted arc is shaped like a cylinder it is called Contracted arc or columnar arc.

Spiral contact structure (Radial magnetic field), using the force (F = j×B) generated by the interaction of the radial magnetic field caused by the current flowing through the arc between two contacts, disperse the arc energy evenly on the surface of contact by rotating the arc that is contracted by the pinch effect so as to minimize contact damage.
The images show arc behavior during the arcing time of about 8ms by shooting with high-speed camera capable of shooting 10,000 frames per sec. (10000FPS) by focusing on parts of the arcing time on the above graph and simultaneously measured arc voltage also represented to show arc state by section.

Radial magnetic field type contact

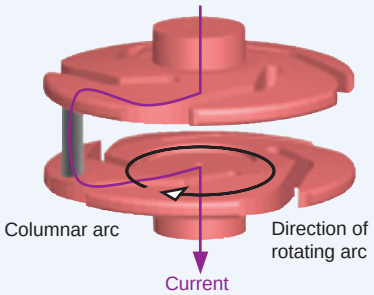

Arc driving principle in the contacts of
Radial magnetic field

Standards and certification

Susol VCB has been type tested and obtained certifications according to the latest IEC standard at international testing laboratory and can be installed and applied at the environment and conditions in accordance with the standard.

● **Standard**

- IEC 62271-1 (2007.10)
  High-voltage switchgear and controlgear - Part 1: Common specifications.
- IEC 62271-100 (2008.04)
  High-voltage switchgear and controlgear - Part 2: Alternating-current circuit breakers.

● **Test and certification**

• Test report (KERI)
• Test report (KEMA)


TEST REPORT

CLASSIFICATION Type Test
APPARATUS Vacuum Circuit Breaker
DESIGNATION
RATINGS
APPLIED STANDARD
RECEIPT No.
APPLICANT
MANUFACTURER
DATE OF TESTS
DATE OF ISSUE

KERI

TYPE TEST CERTIFICATE OF CAPACITIVE SWITCHING PERFORMANCE:C84136-L

APPARATUS:
DESIGNATION:
MANUFACTURER: LG Industrial Systems Co., Ltd., Hungdok-gu, Cheongju, Korea
CLIENT: LG Industrial Systems Co., Ltd., Hungdok-gu, Cheongju, Korea
TESTED BY: KEMA-Powertest, Inc., Chalfont, PA, USA
DATE(S) OF TESTS: Sept. 14-26, 2004

KEMA-POWERTEST

Types and ordering information

7.2kV (VL-06)

Breaker

VL — 06 P 08 A 04

Basic model name	
VL	Susol VCB

Rated voltage (kV)	
06	7.2

Version	
P	Fixed
E	E type drawout
F	F type drawout
G	G type drawout

Rated short time current (kA)	
08	8
13	12.5

Phase distance/Compatibility	
A	Standard
B	Compatible with existing breaker Note6)

Rated current (A)	
04	400
06	630

VL-06E08A04 — M1 C1 T1 SA1 U1 — A 1 4 7

Motor control voltage	
M1	DC 110V
M2	DC 220V~250V
M3	DC 125V
M4	DC 24V~30V
M5	DC 48V~60V
M6	AC 48V
M7	AC 100V~130V
M8	AC 200V~250V

Trip coil voltage	
T1	DC 110V
T2	DC 220V~250V
T3	DC 125V
T4	DC 24V~30V
T5	DC 48V~60V
T6	AC 48V
T7	AC 100V~130V
T8	AC 200V~250V
T9	Current trip coil

UVT Note5)	
U0	Without UVT
U1	DC 110V
U2	DC 220V~250V
U3	DC 125V
U4	DC 24V~30V
U5	DC 48V~60V
U6	AC 48V
U7	AC 100V~130V
U8	AC 200V~250V

Closing coil voltage	
C1	DC 110V
C2	DC 220V~250V
C3	DC 125V
C4	DC 24V~30V
C5	DC 48V~60V
C6	AC 48V
C7	AC 100V~130V
C8	AC 200V~250V

Auxiliary contacts & Connector type		
SA1	Standard	A type connector, 2a2b
SA2		A type connector, 4a4b
SA3		A type connector, 6a6b Note5)
SA5	Flame retardant	A type connector, 2a2b
SA6		A type connector, 4a4b
SA7		A type connector, 6a6b Note5)

Optional	
LH	Lifting Hook
CTD1	Condenser Trip Device(AC 110V)
CTD2	Condenser Trip Device(AC 220V)
UDC1	UVT Time Delay Controller(AC/DC 110V)
UDC2	UVT Time Delay Controller(AC/DC 220V)
UDC3	UVT Time Delay Controller(AC/DC 48V)
CTU	Coil Test Unit

Other accessories Note)	
1	Secondary Trip coil Note5)
3	Position S/W (Test : 1a1b, Service : 2b)
4	Position S/W (Test : 2a, Service : 2a)
5	Position S/W (Test : 1a1b, Service : 1a1b)
7	Key lock (Individual key)
8	Button Padlock
9	Button cover
A	Lead wire
B	User Plug (Part)
G	Key lock (Same key)
O	Lead Wire special color (Blue)

Note) A is written only once in case of more than one.

Note)
1. In the case of selecting accessories such as A1(Secondary trip coil), A4(Position S/W 2a2a)and A7(Key lock), A147 is type name in the ordering.
2. Unable to select A1(Secondary Trip coil), U1~U8(UVT)and T9(Current trip coil) simultaneously.
3. A4(Position S/W 2a2a) and A5(Position S/W 2a2b) can not be selected simultaneously.
4. A8 (Button Padlock) and A9 (Button Cover) can not be selected simultaneously.
5. Maximum number of Auxiliary Contacts available are 5a5b, 5a6b in the case of selecting A1(Secondary trip coil), U1~U8(UVT).
6. In case of using the existing old type cradle and replacing breaker only please order type B (Compatible with existing breaker). Compatibille busbars are required for fixed version.
7. If T9(CTC) is selected, in case of adding Secondary trip coil, CTC is also added.
8. A7 (Keylock(Individual key)) and AG (Keylock(Same key)) an not be selected simultaneously

Cradle

VCL — 06 E 08 A 06

Basic model name	
VCL	Susol VCB Cradle

Rated voltage (kV)	
06	7.2

Version	
E	E type drawout
F	F type drawout
G	G type drawout

Rated short time current (kA)	
08	8
13	12.5

Phase distance/Compatibility	
A	Standard
B	Compatible with existing breaker Note6)

Rated current (A)	
04	400
06	630

Note) In case of replacing the existing old type VCB with Susol VCB please order type B for cradle and A for breaker.

Types and ordering information

7.2/12/17.5kV (VL-06/12/17)

Breaker

VL — **06** **H** **20** **A** **06**

Basic model name	
VL	Susol VCB

Rated voltage (kV)	
06	7.2
12	12
17	17.5

Version	
P	Fixed
E	E type drawout (for MESG)
F	F type drawout (for MESG)
Fs	Fs type drawout (Screw Type)
G	G type drawout (for MESG)
Gs	Gs type drawout (Screw Type)
K	K type drawout (for MCSG compatible with Pro-MEC)
H	H type drawout (for MCSG)

Note) 1. Breaking current 31.5kA: E/F/Fs/G type can be used only with 7.2k
2. Gs/K type: Usable only 7.2/12kV
K type Compatible with Pro-MEC G/T(T) (for withdrawable type for MCSG)

Rated short time current (kA)	
20	20
25	25
32	31.5

Phase distance/Compatibility	
A	150mm
B	210mm
D	275mm
F	Compatible with existing products
K	Compatible with K Pro-MEC G/T(T)

Rated current (A)	
06	630
13	1250
20	2000
25	2500

Note)
1. In case of 7.2kV
   1) Phase distance 150mm only
   2) 20/25kA: only 630/1250/2000A available (E/F/G)
   3) 31.5kA: only 1250/2000A available (E/F/G)
2. K type: phase distance 150mm only
3. In case of 12/17.5kV
   1) H type: phase distance 150/210/275 all available
   2) P type 630/1250A: phase distance 150/210 all available
   3) In case of 20/25kA: 12/17.5kV E/F type phase distance 210 available
   4) K type: compatible with Pro-MEC G/T(T) (phase distance 150mm)
   5) F type (compatible with existing products): Available only to 20/25kA and 630/1250A (phase distance 210mm)
4. Rated current 2500A: only available 31.5kA P/H type (phase distance 210/275mm)

VL-06H20A06 — **M1** **C1** **T1** **SQ2** **U1** — **A** **1 4 7**

Motor control voltage	
M1	DC 110V
M2	DC 220V~250V
M3	DC 125V
M4	DC 24V~30V
M5	DC 48V~60V
M6	AC 48V
M7	AC 100V~130V
M8	AC 200V~250V

Trip coil voltage	
T1	DC 110V
T2	DC 220V~250V
T3	DC 125V
T4	DC 24V~30V
T5	DC 48V~60V
T6	AC 48V
T7	AC 100V~130V
T8	AC 200V~250V
T9	Current trip coil

UVT	
U0	Without UVT
U1	DC 110V
U2	DC 220V~250V
U3	DC 125V
U4	DC 24V~30V
U5	DC 48V~60V
U6	AC 48V
U7	AC 100V~130V
U8	AC 200V~250V

Closing coil voltage	
C1	DC 110V
C2	DC 220V~250V
C3	DC 125V
C4	DC 24V~30V
C5	DC 48V~60V
C6	AC 48V
C7	AC 100V~130V
C8	AC 200V~250

Auxiliary contacts & Connector type		
SA2	Standard	A type connector, 4a4b
SA4		A type connector, 10a10b
SQ2		Q type connector, 4a4b
SQ4		Q type connector, 10a10b
SA6	Flame retardant	A type connector, 4a4b
SA8		A type connector, 10a10b
SQ6		Q type connector, 4a4b
SQ8		Q type connector, 10a10b

Optional	
CTD1	Condenser Trip Device(AC 110V)
CTD2	Condenser Trip Device(AC 220V)
UDC1	UVT Time Delay Controller(AC/DC 110V)
UDC2	UVT Time Delay Controller(AC/DC 220V)
UDC3	UVT Time Delay Controller(AC/DC 48V)
CTU	Coil Test Unit

Other accessories Note)	
1	Secondary Trip coil
2	Secondary Trip Coil with TCM Contact
3	Position S/W (Test : 1a1b, Service : 2b)
4	Position S/W (Test : 2a, Service : 2a)
5	Position S/W (Test : 1a1b, Service : 1a1b)
7	Key lock (Individual key)
8	Button Padlock
9	Button Cover
A	Lead Wire
B	User Plug (Part)
C	Plug Interlock
D	Padlock (H type Door Interlock)
E	MOC (Mechanical Operating Cell S/W)
F	Locking Magnet
G	Key lock (Same key)
I	Mecha Shaft Interlock Lever
J	Door Interlock
O	Lead Wire special color (Blue)
V	CT operated coil 1A
W	CT operated coil 5A

Note) A is written only once in case of more than one.

Note)
1. If A2 (UVT), A4 (Position S/W 2a2b) and A7 (Keylock) are selected, A147 is the type name in the ordering.
2. Unable to select A1(Secondary trip coil), U1~U8(UVT) simultaneously.
3. A3(Position S/W 1a3b), A4(Position S/W 2a2a), A5(Position S/W 2a2b)can not be selected simultaneously.
4. A8 (Button Padlock) and A9 (Button Cover) can not be selected simultaneously.
5. When A1 (Secondary Trip coil) is selected the maximum available auxiliary contacts are 9a9b.
6. When A2(Secondary trip coil with TCM Contact) is selected the maximum available auxiliary contacts are 4a3b, 9a8b.
7. AC (Plug interlock), AD (H type Door interlock), AE (MOC) and AF (Locking magnet) are available only for H type.
8. A/Q-type connector is applicable to P/E/F/G/K type and Q-type connector to H type.
9. Lead wire special color (blue) is applicable to A-type connector.
10. When the position switch is selected from accessories, auxiliary contacts and wiring ass'y can be selected as option A/Q-type (P/E/F/G/K-type) or Q-type(H-type) connector
11. Locking magnet of H type breaker use the same control power supply as motor.
12. Flame retardant type blue wire is not available.
13. When current Trip Coil AV(CTC 1A) or AW(CTC 5A) is selected, A1(Secondary Trip Coil), U1~U8(UVT) cannot be selected simultaneously and the maximum auxiliary contact is 4a4b.
14. AI(Mecha Shaft Interlock Lever) is available only for 12kV, P type.
15. A7 (Keylock(Individual key)) and AG (Keylock(Same key)) an not be selected simultaneously

Cradle

VCL — 06 H 20 A 06 — A 1 5 7

Basic model name	
VCL	Susol VCB Cradle

Rated voltage (kV)	
06	7.2
12	12
17	17.5

Rated short time current (kA)	
20	20
25	25
32	31.5

Rated current (A)	
06	630
13	1250
20	2000
25	2500

Version	
P	Fixed
E	E type drawout (for MESG)
F	F type drawout (for MESG)
Fs	Fs type drawout (Screw Type)
G	G type drawout (for MESG)
Gs	Gs type drawout (Screw Type)
K	K type drawout (for MCSG compatible with Pro-MEC)
Ha	Ha type drawout (for MCSG)
H	H type drawout (for MCSG)

Note) 1. Breaking current 31.5kA: E/F/Fs/G type can be used only with 7.2k
2. Gs/K type: Usable only 7.2/12kV K type Compatible with Pro-MEC G/T(T) (for withdrawable type for MCSG)
3. Ha type: 7.2/12kV phase-to-phase 150mm only. Not available for 2500A

Phase distance/Compatibility	
A	150mm
B	210mm
D	275mm
F	Compatible with existing products
K	Compatible with K Pro-MEC G/T(T)

Note)
1. In case of 7.2kV
   1) Phase distance 150mm only
   2) 20/25kA: only 630/1250/2000A available (E/F/G)
   3) 31.5kA: only 1250/2000A available (E/F/G)
2. K type: phase distance 150mm only
3. In case of 12/17.5kV
   1) H type: phase distance 150/210/275 all available
   2) P type 630/1250A: phase distance 150/210 all available
   3) In case of 20/25kA: 12/17.5kV E/F type phase distance 210 available
   4) K type: compatible with Pro-MEC G/T(T) (phase distance 150mm)
   5) F type (compatible with existing products): Available only to 20/25kA and 630/1250A (phase distance 210mm)
4. Rated current 2500A: only available 31.5kA P/H type (phase distance 210/275mm)

Other accessories	
1	ES(Standard earthing Switch) without option
2	ES with position S/W(2a2b)
4	ES with position S/W(6a6b)
5	Key lock for ES
6	Locking magnet for ES: DC 110V
7	Locking magnet for ES: DC 220V
8	Locking magnet for ES: DC 125V
9	Locking magnet for ES: DC 24V
A	Locking magnet for ES: DC 48V
B	Locking magnet for ES: AC 48V
C	Locking magnet for ES: AC 110V
D	Locking magnet for ES: AC 220V
E	Shutter padlock
F	TOC(Truck Operating Cell S/W)
G	MOC (Mechanical Operating Cell S/W)
H	Door
J	Door Interlock
K	Door Emergency Push Button
L	Temperature Monitoring Sensor
M	H type Lead wire 4a4b (Flame retardant wire)
N	H type Lead wire 10a10b (Flame retardant wire)
O	H type Lead wire 4a4b (Rated short time current)

Optional	
TM	Temperature Monitoring

Note) A is written only once in case of more than one.

Note) 1. These accessories for cradle and TM can be applied only to H type. (When ordering TM, AL option must be selected)
2. AJ and AK can not be selected without door (AH).
3. H type lead wire - one of AM, AN or AO is required for cradle in case of H type breaker.
4. Unable to select AK at the cradle in the case of selecting A8(Button Padlock), A9(Button Cover) for body of H-type.
5. When Keylock(A5) is selected, Earthing Switch is included as standard.
6. Please contact us if you need IAC (Internal arc classification) of H type CB compartment.
7. For Ha-type cradle, Shutter padlock (AE) can be selected, and only when Earthing Switch (A1~A4) is selected, A5, A6~AD can be selected.

Types and ordering information

24/25.8/36kV (VL-20/25/36)

Breaker

VL — 20 H 13 B 06

Basic model name	
VL	Susol VCB

Rated voltage (kV)	
20	24
25	25.8
36	36

Version	
P	Fixed
E	E type drawout (for MESG)
F	F type drawout (for MESG)
G	G type drawout (for MESG)
K	K type drawout (for MCSG compatible with Pro-MEC)
H	H type drawout (for MCSG)

Rated short time current (kA)	
13	12.5
16	16
25	25

Phase distance/Compatibility	
B	210mm
F	265mm
D	275mm
G	Enclosed type, Tulip Contact

Rated current (A)	
06	630
13	1250
20	2000
25	2500

Note) - P, E, F type : phase distance 265mm only
- G-type: 630A and 1250A – 210mm and 265mm 2000A - phase distance 210mm only
- K-type: 630A and 1250A - , 210mm and 265mm 2000A - phase distance 265mm only
- H-type: All ratings - dual phase distance, 210mm and 275mm dual (2500A - phase distance 275mm only)
- E, F-type: phase distance and appearance are distinguished with F and G

VL-20H13B06 — M1 C1 T1 SQ2 U1 — A 1 4 7

Motor control voltage	
M1	DC 110V
M2	DC 220V~250V
M3	DC 125V
M4	DC 24V~30V
M5	DC 48V~60V
M6	AC 48V
M7	AC 100V~130V
M8	AC 200V~250V

Trip coil voltage	
T1	DC 110V
T2	DC 220V~250V
T3	DC 125V
T4	DC 24V~30V
T5	DC 48V~60V
T6	AC 48V
T7	AC 100V~130V
T8	AC 200V~250V
T9	Current trip coil

UVT	
U0	Without UVT
U1	DC 110V
U2	DC 220V~250V
U3	DC 125V
U4	DC 24V~30V
U5	DC 48V~60V
U6	AC 48V
U7	AC 100V~130V
U8	AC 200V~250V

Closing coil voltage	
C1	DC 110V
C2	DC 220V~250V
C3	DC 125V
C4	DC 24V~30V
C5	DC 48V~60V
C6	AC 48V
C7	AC 100V~130V
C8	AC 200V~250

Auxiliary contacts & Connector type		
SA2	Standard	A type connector, 4a4b
SA4		A type connector, 10a10b
SQ2		Q type connector, 4a4b
SQ4		Q type connector, 10a10b
SA6	Flame retardant	A type connector, 4a4b
SA8		A type connector, 10a10b
SQ6		Q type connector, 4a4b
SQ8		Q type connector, 10a10b

Other accessories Note)	
1	Secondary Trip coil
2	Secondary Trip Coil with TCM Contact
3	Position S/W (Test : 1a1b, Service : 2b)
4	Position S/W (Test : 2a, Service : 2a)
5	Position S/W (Test : 1a1b, Service : 1a1b)
7	Key lock (Individual key)
8	Button Padlock
9	Button Cover
A	Lead Wire
B	User Plug (Part)
C	Plug Interlock
D	Padlock (H type Door Interlock)
E	MOC (Mechanical Operating Cell S/W)
F	Locking Magnet
G	Key lock (Same key)
J	Door Interlock
O	Lead Wire special color (Blue)
V	CT operated coil 1A
W	CT operated coil 5A

Note) A is written only once in case of more than one.

Optional	
CTD1	Condenser Trip Device(AC 110V)
CTD2	Condenser Trip Device(AC 220V)
UDC1	UVT Time Delay Controller(AC/DC 110V)
UDC2	UVT Time Delay Controller(AC/DC 220V)
UDC3	UVT Time Delay Controller(AC/DC 48V)
CTU	Coil Test Unit

Note)
1. If A2 (UVT), A4 (Position S/W 2a2b) and A7 (Keylock) are selected, A147 is the type name in the ordering.
2. Unable to select A1(Secondary trip coil), U1~U8(UVT) simultaneously.
3. A3(Position S/W 1a3b), A4(Position S/W 2a2a), A5(Position S/W 2a2b)can not be selected simultaneously.
4. A8 (Button Padlock) and A9 (Button Cover) can not be selected simultaneously.
5. When A1 (Secondary Trip coil) is selected the maximum available auxiliary contacts are 9a9b.
6. When A2(Secondary trip coil with TCM Contact) is selected the maximum available auxiliary contacts are 4a3b, 9a8b.
7. AC (Plug interlock), AD (H type Door interlock), AE (MOC) and AF (Locking magnet) are available only for H type.
8. A/Q-type connector is applicable to P/E/F/G type and Q-type connector to H type.
9. Lead wire special color (blue) is applicable to A-type connector.
10. When the position switch is selected from accessories, auxiliary contacts and wiring ass'y can be selected as option A/Q-type (P/E/F/G/K-type) or Q-type(H-type) connector
11. Locking magnet of H type breaker use the same control power supply as motor.
12. Flame retardant type blue wire is not available.
13. When current Trip Coil AV(CTC 1A) or AW(CTC 5A) is selected, A1(Secondary Trip Coil), U1~U8(UVT) cannot be selected simultaneously and the maximum auxiliary contact is 4a4b.
14. A7 (Keylock(Individual key)) and AG (Keylock(Same key)) an not be selected simultaneously

Cradle

VCL — 20 H 13 B 06 — A 1 5 7

Basic model name	
VCL	Susol VCB Cradle

Rated voltage (kV)	
20	24
25	25.8
36	36

Rated short time current (kA)	
13	12.5
16	16
25	25

Rated current (A)	
06	630
13	1250
20	2000
25	2500

Version	
E	E type drawout (for MESG)
F	F type drawout (for MESG)
G	G type drawout (for MESG)
K	K type drawout (for MCSG compatible with Pro-MEC)
H	H type drawout (for MCSG)

Note) K-type(compatible with Pro-MEC G/T(T)) cradle for MCSG is for below product - LCL-20G-13D/T,15D/T, 25D/T

Phase distance/Compatibility	
B	210mm
F	265mm
D	275mm
G	Enclosed type, Tulip Contact

Note) - P, E, F type: phase distance 265mm only
- G-type: 630A and 1250A – 210mm and 265mm
2000A – phase distance 210mm only
- K-type: 630A and 1250A, 210mm and 265mm
2000A - phase distance 265mm only
- H-type: All ratings - dual phase distance, 210mm and 275mm dual
(2500A - phase distance 275mm only)
- E, F-type: phase distance and appearance are distinguished with F and G

Other accessories	
1	ES(Standard earthing Switch) without option
2	ES with position S/W(2a2b)
4	ES with position S/W(6a6b)
5	Key lock for ES
6	Locking magnet for ES: DC 110V
7	Locking magnet for ES: DC 220V
8	Locking magnet for ES: DC 125V
9	Locking magnet for ES: DC 24V
A	Locking magnet for ES: DC 48V
B	Locking magnet for ES: AC 48V
C	Locking magnet for ES: AC 110V
D	Locking magnet for ES: AC 220V
E	Shutter padlock
F	TOC(Truck Operating Cell S/W)
G	MOC (Mechanical Operating Cell S/W)
H	Door
J	Door Interlock
K	Door Emergency Push Button
L	Temperature Monitoring Sensor
M	H type Lead wire 4a4b (Flame retardant wire)
N	H type Lead wire 10a10b (Flame retardant wire)
O	H type Lead wire 4a4b (Rated short time current)

Optional	
TM	Temperature Monitoring

Note) A is written only once in case of more than one.

Note) 1. These accessories for cradle and TM can be applied only to H type.
2. AJ and AK can not be selected without door (AH).
3. TM (Temperature Monitoring) should be used with AL (Temperature Sensor).
4. H type lead wire - one of AM, AN or AO is required for cradle in case of H type breaker.
5. Accessary A2~AQ is available to H-type. Exceptionally K-type is available to A1. (Position S/W 4a4b is basic option of A1)
6. Unable to select AK at the cradle in the case of selecting A8(Button Padlock), A9(Button Cover) for body of H-type.
7. When Keylock(A5) is selected, Earthing Switch is included as standard.
8. Please contact us if you need IAC (Internal arc classification) of H type CB compartment.

Types and ordering information

7.2/12kV (LVB-06/12)

Breaker

LVB — 06 G — 40 L / 12 — 1A 2B — BB6GT2

Basic model name	
LVB	Susol VCB

Rated voltage (kV)	
06	7.2
12	12

Rated short time current (kA)	
32	31.5
40	40

Note) In case of 31.5kA, 3150A is availble only.
31.5kA 630/1250/2000/2500A: Please refer to VL Series

Rated current (A)	
12	1250
20	2000
30	3150

Connector and wire	
2B	A type connector, 4a4b
2E	A type connector, 10a10b
2M	Q type connector, 4a4b
2N	Q type connector, 10a10b
00	Dummy VCB

Version	
P	Fixed
E	E type drawout
F	F type drawout
G	G type drawout
G	G/T type drawout (for MESG)+T2

Model version	
L	Susol

Control voltage	
1A	DC 110V
1B	DC 220V~250V
1C	DC 48V
1E	DC 125V
1L	AC 220V
1M	AC 110V
1N	AC 48V
00	Dummy VCB

Other accessories Note)	
B	Position S/W(Test : 2a, Service : 2a)
B1	Position S/W(Test : 1a1b, Service : 1a1b)
B2	Position S/W(Test : 1a1b, Service : 2b)
B6	User's Plug(Part)
C1	Button Padlock(ON)
C2	Button Padlock(OFF)
C3	Button Padlock(ON,OFF)
D1	Button Cover(ON)
D2	Button Cover(OFF)
D3	Button Cover(ON OFF)
E	Button Padlock(ON) + Button Cover(OFF)
F	Button Padlock(OFF) + Button Cover(ON)
G	Key lock (Individual key)
G1	Key lock (Same key)
H	Secondary Trip coil
J	Flame retardant wire
K	Latch checking S/W
P1	Dummy VCB(A type connector)
P2	Dummy VCB(B type connector)
S	Padlock
T	Tulip contact, Closed type
T2	T + Earthing S/W Interlock change
V	UVT

Note)
1. H(Secondary trip coil) and V(UVT) can not be selected simultaneously.
2. B(Position S/W 2a2a), B1(Position S/W 2a2b) and B2(Position S/W 1a3b) can not be selected simultaneously.
   However, only B(Position S/W 2a2a) is available for G/T type(MCSG drawable type)
3. If V(UVT) is selected , additional K(Latch checking S/W) is not allowed.
   (Because if UVT is slected a latch checking S/W is included as standard for electrical interlocking)
4. One out of T and T2 should be selected for G/T type(MCSG drawable type).
   T2 is the standard and T (Product before Earthing S/W interlock change) is suitable for compatibility with existing products.
5. In case of T(Tulip contact, closed type) 3150A is available only for open type housing .
6. Only G/T type is available for 12kV.
7. G (Keylock(Individual key)) and G1 (Keylock(Same key)) an not be selected simultaneously

Cradle

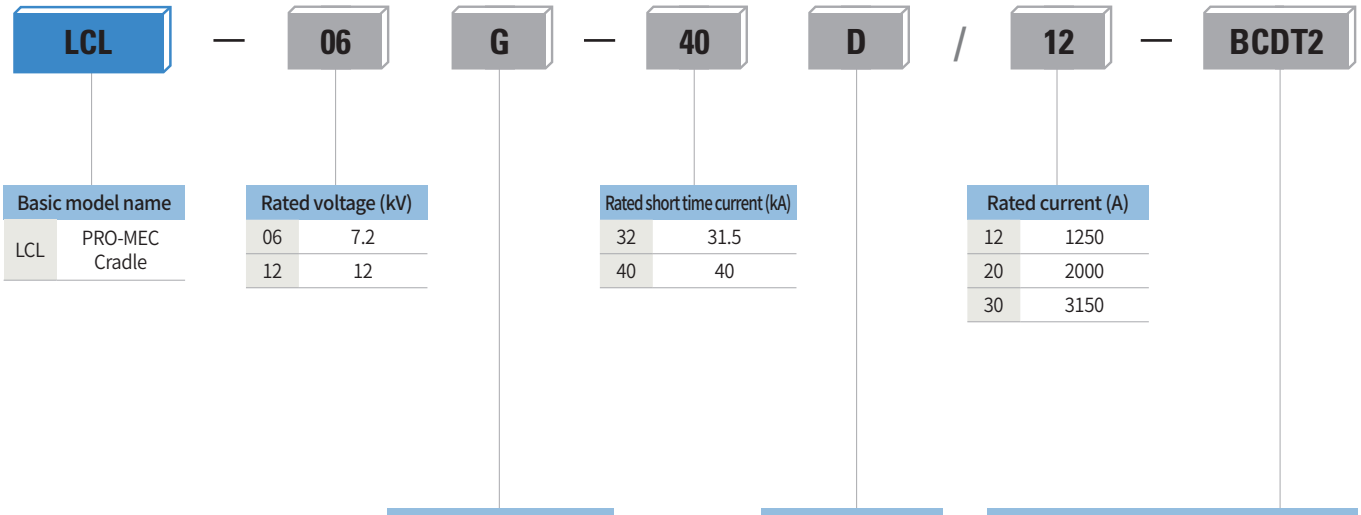

Basic model name	
LCL	PRO-MEC Cradle

Rated voltage (kV)	
06	7.2
12	12

Rated short time current (kA)	
32	31.5
40	40

Rated current (A)	
12	1250
20	2000
30	3150

Version	
P	Fixed
E	E type drawout
F	F type drawout
G	G type drawout
G	G/T type drawout (for MESG)+T2

Model version	
D	Pro-MEC

Other accessories	
B	Earthing Switch Note2)
C	Earthing Switch Position S/W(ON/OFF)
D	Earthing Switch Locking coil
T	Tulip contact, Closed type Note1
T2	T + Earthing S/W Interlock change Note1
T3	T2 +Earthing S/W without Conductor ass'y Note1
U1	Reduced height type Note2)

Note) 1. One out of T, T2 and T3 should be selected for G/T type(MCSG drawable type).
T2 is the standard and T (Product before Earthing S/W interlock change)
is suitable for compatibility with existing products.
T3 is available only for 1250/2000A.
2. U1(Reduced height type) and B(Earthing S/W) can not be selected simultaneously.

Types and ordering information

7.2/12/17.5/24/25.8/36kV (VH-06/12/17/20/25/36)

Breaker

VH — 06 H 25 B 13

Basic model name	
VH	Susol VCB

Rated voltage (kV)	
06	7.2
12	12
17	17.5
20	24
25	25.8
36	36

Version	
P	Fixed
E	E type drawout (for MESG)
F	F type drawout (for MESG)
Fs	Fs type drawout (Screw Type)
G	G type drawout (for MESG)
Gs	Gs type drawout (Screw Type)
K	K type drawout (for MCSG compatible with Pro-MEC type)
H	H type drawout (for MCSG)

Rated short time current (kA)	
25	25
32	31.5
40	40
50	50

Note)
1. 25kA is for 24/36kV
2. 31.5/40kA is for 7.2/12/17.5/24/36kV
3. 50kA is for 7.2/12/17.5kV

Phase distance/Compatibility	
A	150mm
B	210mm
D	275mm
E	300mm
K	Compatible with K Pro-MEC G/T(T)
L	320mm

Note) K can be selected for Pro-MEC G/T(T) compatible models ONLY and the phase distance is 150mm.

Rated current (A)	
12	1200A
13	1250A
20	2000A
25	2500A
32	3150A
40	4000A
50	5000A

Note) Refer to the rating table for selecting rated current.

VH-06H25B13 — M1 C1 T1 SQ2 U1 — A 1 4 7

Motor control voltage	
M1	DC 110V
M2	DC 220V~250V
M3	DC 125V
M5	DC 48V
M6	AC 48V
M7	AC 110V
M8	AC 220V

Trip coil voltage	
T1	DC 110V
T2	DC 220V~250V
T3	DC 125V
T5	DC 48V
T6	AC 48V
T7	AC 110V
T8	AC 220V

UVT	
U0	Without UVT
U1	DC 110V
U2	DC 220V~250V
U3	DC 125V
U5	DC 48V
U6	AC 48V
U7	AC 110V
U8	AC 220V

Closing coil voltage	
C1	DC 110V
C2	DC 220V~250V
C3	DC 125V
C5	DC 48V
C6	AC 48V
C7	AC 110V
C8	AC 220V

Auxiliary contacts & Connector type		
SA2	Standard	A type connector, 4a4b
SA4		A type connector, 10a10b
SQ2		Q type connector, 4a4b
SQ4		Q type connector, 10a10b
SA6	Flame retardant	A type connector, 4a4b
SA8		A type connector, 10a10b
SQ6		Q type connector, 4a4b
SQ8		Q type connector, 10a10b

Optional	
CTD1	Condenser Trip Device(AC 110V)
CTD2	Condenser Trip Device(AC 220V)
UDC1	UVT Time Delay Controller(AC/DC 110V)
UDC2	UVT Time Delay Controller(AC/DC 220V)
UDC3	UVT Time Delay Controller(AC/DC 48V)
CTU	Coil Test Unit

Other accessories Note)	
1	Secondary Trip coil
2	Secondary Trip Coil with TCM Contact
3	Position S/W (Test : 1a1b, Service : 2b)
4	Position S/W (Test : 2a, Service : 2a)
5	Position S/W (Test : 1a1b, Service : 1a1b)
7	Key lock (Individual key)
8	Button Padlock
9	Button Cover
A	Lead Wire
B	User Plug (Part)
C	Plug Interlock
D	Padlock (H type Door interlock)
E	MOC (Mechanical Operating Cell S/W)
F	Locking Magnet
G	Key lock (Same key)
O	Lead Wire special color (Blue)
X	Wireless Temperature monitoring sensor

Note) A is written only once in case of more than one.

Note)
1. If A1(Secondary trip coil), A4(Position S/W 2a2a), A7(Keylock) are selected, A147 is the type name in the ordering.
2. A1(Secondary trip coil), U1~U8(UVT) can not be selected simultaneously.
3. A3(Position S/W 1a3b), A4(Position S/W 2a2a), A5(Position S/W 2a2b) can not be selected simultaneously.
4. A8 (Button Padlock) and A9 (Button Cover) can not be selected simultaneously.
5. AC (Plug interlock), AD (H type Door interlock), AE (MOC) and AF (Locking magnet) are available only for H type.
6. A/Q-type connector is applicable to P/E/F/G/K type and Q-type connector to H type.
7. Lead Wire Special Color(blue) is available only for A type connector and the flame retardant is not applicable to it.
8. Locking magnet can be applied only to H type VCB - breaker and cradle.
9. Locking magnet of H type breaker use the same control power supply as motor.
10. In case of selecting UVT A6 (Latch checking S/W) is not allowed. A6 (Latch checking S/W) is installed by default to make electrical interlock with UVT.
11. Lead wire is enclosed in the breaker in case of ordering fixed type or H type breaker without cradle, installed of cradle in case of ordering the breaker with cradle. If user plug is selected it will be enclosed in the breaker.
12. When A1(Secondary trip coil) is selected the maximum available auxiliary contacts are 10a10b.
13. When A2(Secondary Trip coil with TCM Contact) is selected the maximum available auxiliary contacts are 4a3b, 10a9b.
14. A7 (Keylock(Individual key)) and AG (Keylock(Same key)) an not be selected simultaneously

Cradle

VCH — 06 H 25 B 13 — A 157

Basic model name	
VCH	Susol VCB Cradle

Rated voltage (kV)	
06	7.2
12	12
17	17.5
20	24
25	25.8
36	36

Rated short time current (kA)	
25	25
32	31.5
40	40
50	50

Rated current (A)	
12	1200A
13	1250A
20	2000A
25	2500A
32	3150A
40	4000A
50	5000A

Version	
P	Fixed
E	E type drawout (for MESG)
F	F type drawout (for MESG)
Fs	Fs type drawout (Screw Type)
G	G type drawout (for MESG)
Gs	Gs type drawout (Screw Type)
K	K type drawout (for MCSG compatible with Pro-MEC type)
Ha	Ha type drawout (for MCSG)
Hb	Hb type drawout (for MCSG)
H	H type drawout (for MCSG)

* Only K-type cradle is available for 4000A.
* E/F/Fs/Gs/K-type (open type cradle)
* H-type (box type cradle)
* Applies Ha type
  1) 7.2/12kV 40kA 1250/2000A phase distance 150mm
  2) 7.2/12/17.5kV 40kA 3150A phase distance 210mm
  3) 7.2/12/17.5kV 40/50kA 4000A phase distance 275mm
  4) 7.2/12kV 40/50kA 5000A phase distance 320mm
* Applies Hb type
  1) 7.2/12kV 40/50kA 4000A phase distance 275mm

Phase distance/Compatibility	
A	150mm
B	210mm
D	275mm
E	300mm
J	Rotated bushing type (210mm)
L	320mm

Other accessories (H type)	
1	ES(Standard earthing Switch) without option
2	ES with position S/W(2a2b)
4	ES with position S/W(6a6b)
5	Key lock for ES
6	Locking magnet for ES: DC 110V
7	Locking magnet for ES: DC 220V
8	Locking magnet for ES: DC 125V
A	Locking magnet for ES: DC 48V
B	Locking magnet for ES: AC 48V
C	Locking magnet for ES: AC 110V
D	Locking magnet for ES: AC 220V
E	Shutter padlock
F	TOC (Truck Operating Cell S/W)
G	MOC (Mechanical Operating Cell S/W)
H	Door
J	Door Interlock
K	Door Emergency Push Button
L	Temperature Sensor
M	H type Lead wire 4a4b (Flame retardant wire)
N	H type Lead wire 10a10b (Flame retardant wire)
O	H type Lead wire 4a4b (Rated short time current)
Q	ANSI type Charge interlock
T3	Earthing S/W without conductor ass'y
LC	Earthing S/W Locking coil
U1	Earthing S/W Locking coil

Note) T3, LC, U1 are options for K type cradle ONLY(Compatible with previous Pro-MEC models)

Optional	
TM	Temperature Monitoring

Note) A is written only once in case of more than one.

Note)
1. Cradle accessories and the option TM are available only for H type(MCSG drawable type) and Locking magnet is available in DC110V, DC125V for those three types. K, Ha, Hb types can only be applied to A1.
2. AJ and AK can not be selected without door (AH).
3. H type lead wire - one of AM, AN or AO is required for cradle in case of H type breaker.
4. If the H type breaker options A8(Button Padlock) and A9(Button Cover) are slected, the cradle option AK(Door Emergency Push Button) is not available.
5. When Keylock(A5) is selected, Earthing Switch is included as standard.
6. T3/SM/LC/U/U1 can be selected for K type ONLY.
7. When A1 is selected for 4000A, 5000A cradle, ES Position S/W with 4a4b is applied as default.
8. If TOC/MOC option is selected, cradle's height is increased (E/S equipped structure, Hb ONLY).
9. Ha type is open-type MCSG Cradle with NO door related options included.
10. Please contact us if you need IAC (Internal arc classification) of H type CB compartment.
11. For 7.2/12kV 40kA 1250/2000 Ha type cradles, Shutter padlock (AE) can be selected, and A5, A6~AD can be selected only when Earthing Switch (A1~A4) is selected. (For 7.2/12/17.5kV 40kA 3150A Ha type cradle, Earthing Switch cannot be selected, only Shutter padlock (AE) can be selected.

Type of circuit breakers

7.2/12/17.5/24/25.8/36kV (VL-06/12/17/20/25/36)

Ur [kV]	Isc [kA]	Ir[A]					VCB		CRADLE		Connector
		p=130	p=150	p=210	p=265	p=275	Type	Version	Type	Version	
7.2	8	400					VL-06□08A04	P,E,F,G	VCL-06□08A04	E,F,G	A
									VCL-06□08B04	E,F,G	A
							VL-06□08B04	P,E,F,G			A
	12.5	630					VL-06□13A06	P,E,F,G	VCL-06□13A06	E,F,G	A
									VCL-06□13B06	E,F,G	A
							VL-06□13B06	P,E,F,G			A
	20		630				VL-06□20A(K)06	P,E,F,G,H	VCL-06□20A(K)06	E,F,G,K,H,Ha	P,E,F,G,K:A/Q,H:Q
			1250				VL-06□20A(K)13	P,E,F,G,H	VCL-06□20A(K)13	E,F,G,K,H,Ha	P,E,F,G,K:A/Q,H:Q
			2000				VL-06□20A20	P,E,F,G,H	VCL-06□20A20	E,F,G,H,Ha	P,E,F,G:A/Q,H:Q
	25		630				VL-06□25A(K)06	P,E,F,G,K.H	VCL-06□25A06	E,F,G,K,H,Ha	P,E,F,G,K:A/Q,H:Q
			1250				VL-06□25A(K)13	P,E,F,G,K,H	VCL-06□25A13	E,F,G,K,H,Ha	P,E,F,G,K:A/Q,H:Q
			2000				VL-06□25A(K)20	P,E,F,G,K,H	VCL-06□25A20	E,F,G,K,H,Ha	P,E,F,G,K:A/Q,H:Q
	31.5		630				VL-06□32A06	P,H	VCL-06H32A06	H,Ha	Q
			1250				VL-06□32A(K)13	P,E,F,Fs,G,Gs,K,H	VCL-06□32A13	E,F,Fs,G,Gs,K,H,Ha	P,E,F,Fs,G,Gs,K:A/Q,H:Q
			2000				VL-06□32A(K)20	P,E,F,Fs,G,Gs,K,H	VCL-06□32A20	E,F,Fs,G,Gs,K,H,Ha	P,E,F,Fs,G,Gs,K:A/Q,H:Q
12	20		630				VL-12□20A(K)06	P,K,H	VCL-12□20A06	K,H,Ha	K:A/Q,H:Q
			1250				VL-12□20A(K)13	P,K,H	VCL-12□20A13	K,H,Ha	K:A/Q, H:Q
			2000				VL-12H20A20	H	VCL-12H20A20	H,Ha	Q
				630			VL-12□20B06	P,E,F,H	VCL-12□20B06	E,F,H	P,E,F:A/Q,H:Q
				1250			VL-12□20B13	P,E,F,H	VCL-12□20B13	E,F,H	P,E,F:A/Q,H:Q
				2000			VL-12□20B20	P,E,F,H	VCL-12□20B20	E,F,H	P,E,F:A/Q,H:Q
				630			VL-12□20F06	E,F	VCL-12□20F06	E,F	A/Q
				1250			VL-12□20F13	E,F	VCL-12□20F13	E,F	A/Q
	25		630				VL-12□25A(K)06	P,K,H	VCL-12□25A06	K,H,Ha	K:A/Q,H:Q
			1250				VL-12□25A(K)13	P,K,H	VCL-12□25A13	K,H,Ha	K:A/Q,H:Q
			2000				VL-12□25A(K)20	K,H	VCL-12□25A20	K,H,Ha	K:A/Q,H:Q
				630			VL-12□25B06	P,E,F,H	VCL-12□25B06	E,F,H	P,E,F:A/Q,H:Q
				1250			VL-12□25B13	P,E,F,H	VCL-12□25B13	E,F,H	P,E,F:A/Q,H:Q
				2000			VL-12□25B20	P,E,F,H	VCL-12□25B20	E,F,H	P,E,F:A/Q,H:Q
				630			VL-12□25F06	E,F	VCL-12□25F06	E,F	A/Q
				1250			VL-12□25F13	E,F	VCL-12□25F13	E,F	A/Q
	31.5		630				VL-12□32A06	P,H	VCL-12H32A06	H,Ha	Q
			1250				VL-12□32A(K)13	P,Gs,K,H	VCL-12□32A13	Gs,K,H,Ha	Gs,K:A/Q,H:Q
			2000				VL-12□32A(K)20	Gs,K,H	VCL-12□32A20	Gs,K,H,Ha	Gs,K:A/Q,H:Q
				630			VL-12□32B06	P,H	VCL-12H32B06	H	Q
				1250			VL-12□32B13	P,H	VCL-12H32B13	H	Q
				2000			VL-12□32B20	P,H	VCL-12H32B20	H	Q
				2500			VL-12□32B25	P,H	VCL-12H32B25	H	Q
						2500	VL-12□32D25	P,H	VCL-12H32D25	H	Q
17.5	20		630				VL-17H20A06	H	VCL-17H20A06	H	Q
			1250				VL-17H20A13	H	VCL-17H20A13	H	Q
			2000				VL-17H20A20	H	VCL-17H20A20	H	Q
				630			VL-17□20B06	P,E,F,H	VCL-17□20B06	E,F,H	P,E,F:A/Q,H:Q
				1250			VL-17□20B13	P,E,F,H	VCL-17□20B13	E,F,H	P,E,F:A/Q,H:Q
				2000			VL-17□20B20	P,E,F,H	VCL-17□20B20	E,F,H	P,E,F:A/Q,H:Q
				630			VL-17□20F06	E,F	VCL-17□20F06	E,F	A/Q
				1250			VL-17□20F13	E,F	VCL-17□20F13	E,F	A/Q
	25		630				VL-17H25A06	H	VCL-17H25A06	H	Q
			1250				VL-17H25A13	H	VCL-17H25A13	H	Q
			2000				VL-17H25A20	H	VCL-17H25A20	H	Q
				630			VL-17□25B06	P,E,F,H	VCL-17□25B06	E,F,H	P,E,F:A/Q,H:Q
				1250			VL-17□25B13	P,E,F,H	VCL-17□25B13	E,F,H	P,E,F:A/Q,H:Q
				2000			VL-17□25B20	P,E,F,H	VCL-17□25B20	E,F,H	P,E,F:A/Q,H:Q
				630			VL-17□25F06	E,F	VCL-17□25F06	E,F	A/Q
				1250			VL-17□25F13	E,F	VCL-17□25F13	E,F	A/Q
	31.5		630				VL-17□32A06	P,H	VCL-17H32A06	H	Q
			1250				VL-17□32A13	P,H	VCL-17H32A13	H	Q
			2000				VL-17□32A20	H	VCL-17H32A20	H	Q
				630			VL-17□32B06	P,H	VCL-17H32B06	H	Q
				1250			VL-17□32B13	P,H	VCL-17H32B13	H	Q
				2000			VL-17□32B20	P,H	VCL-17H32B20	H	Q
				2500			VL-17□32B25	P,H	VCL-17H32B25	H	Q
						2500	VL-17□32D25	P,H	VCL-17H32D25	H	Q

Ur [kV]	Isc [kA]	Ir[A]					VCB		CRADLE		Connector
		p=130	p=150	p=210	p=265	p=275	Type	Version	Type	Version	
24	12.5			630			VL-20□13B06	G,K,H	VCL-20□13B06	G,K,H	G,K:A/Q, H:Q
				1250			VL-20□13B13	G,K,H	VCL-20□13B13	G,K,H	G,K:A/Q, H:Q
					630		VL-20□13F06	P,E,F,G,K	VCL-20□13F06	E,F,G,K	A/Q
					630		VL-20□13G06	E,F	VCL-20□13G06	E,F	A/Q
					1250		VL-20□13F13	P,E,F,G,K	VCL-20□13F13	E,F,G,K	A/Q
					1250		VL-20□13G13	E,F	VCL-20□13G13	E,F	A/Q
						630	VL-20H13D06	H	VCL-20H13D06	H	Q
						1250	VL-20H13D13	H	VCL-20H13D13	H	Q
	16			630			VL-20□16B06	G,K,H	VCL-20□16B06	G,K,H	G,K:A/Q, H:Q
				1250			VL-20□16B13	G,K,H	VCL-20□16B13	G,K,H	G,K:A/Q, H:Q
					630		VL-20□16F06	P,E,F,G,K	VCL-20□16F06	E,F,G,K	A/Q
					630		VL-20□16G06	E,F	VCL-20□16G06	E,F	A/Q
					1250		VL-20□16F13	P,E,F,G,K	VCL-20□16F13	E,F,G,K	A/Q
					1250		VL-20□16G13	E,F	VCL-20□16G13	E,F	A/Q
						630	VL-20H16D06	H	VCL-20H16D06	H	Q
						1250	VL-20H16D13	H	VCL-20H16D13	H	Q
	25			630			VL-20□25B06	G,K,H	VCL-20□25B06	G,K,H	G,K:A/Q, H:Q
				1250			VL-20□25B13	G,K,H	VCL-20□25B13	G,K,H	G,K:A/Q, H:Q
				2000			VL-20□25B20	G,H	VCL-20□25B20	G,H	G:A/Q, H:Q
					630		VL-20□25F06	P,E,F,G,K	VCL-20□25F06	E,F,G,K	A/Q
					630		VL-20□25G06	E,F	VCL-20□25G06	E,F	A/Q
					1250		VL-20□25F13	P,E,F,G,K	VCL-20□25F13	E,F,G,K	A/Q
					1250		VL-20□25G13	E,F	VCL-20□25G13	E,F	A/Q
					2000		VL-20□25F20	P,E,F,K	VCL-20□25F20	E,F,K	A/Q
					2000		VL-20□25G20	E,F	VCL-20□25G20	E,F	A/Q
						630	VL-20H25D06	H	VCL-20H25D06	H	Q
						1250	VL-20H25D13	H	VCL-20H25D13	H	Q
						2000	VL-20H25D20	H	VCL-20H25D20	H	Q
						2500	VL-20H25D25	H	VCL-20H25D25-AS	H	Q
25.8	12.5			630			VL-25□13B06	G,K,H	VCL-25□13B06	G,K,H	G,K:A/Q, H:Q
				1250			VL-25□13B13	G,K,H	VCL-25□13B13	G,K,H	G,K:A/Q, H:Q
					630		VL-25□13F06	P,E,F,G,K	VCL-25□13F06	E,F,G,K	A/Q
					630		VL-25□13G06	E,F	VCL-25□13G06	E,F	A/Q
					1250		VL-25□13F13	P,E,F,G,K	VCL-25□13F13	E,F,G,K	A/Q
					1250		VL-25□13G13	E,F	VCL-25□13G13	E,F	A/Q
						630	VL-25H13D06	H	VCL-25H13D06	H	Q
						1250	VL-25H13D13	H	VCL-25H13D13	H	Q
	16			630			VL-25□16B06	G,K,H	VCL-25□16B06	G,K,H	G,K:A/Q, H:Q
				1250			VL-25□16B13	G,K,H	VCL-25□16B13	G,K,H	G,K:A/Q, H:Q
					630		VL-25□16F06	P,E,F,G,K	VCL-25□16F06	E,F,G,K	A/Q
					630		VL-25□16G06	E,F	VCL-25□16G06	E,F	A/Q
					1250		VL-25□16F13	P,E,F,G,K	VCL-25□16F13	E,F,G,K	A/Q
					1250		VL-25□16G13	E,F	VCL-25□16G13	E,F	A/Q
						630	VL-25H16D06	H	VCL-25H16D06	H	Q
						1250	VL-25H16D13	H	VCL-25H16D13	H	Q
	25			630			VL-25□25B06	G,K,H	VCL-25□25B06	G,K,H	G,K:A/Q, H:Q
				1250			VL-25□25B13	G,K,H	VCL-25□25B13	G,K,H	G,K:A/Q, H:Q
				2000			VL-25□25B20	G,H	VCL-25□25B20	G,H	G:A/Q, H:Q
					630		VL-25□25F06	P,E,F,G,K	VCL-25□25F06	E,F,G,K	A/Q
					630		VL-25□25G06	E,F	VCL-25□25G06	E,F	A/Q
					1250		VL-25□25F13	P,E,F,G,K	VCL-25□25F13	E,F,G,K	A/Q
					1250		VL-25□25G13	E,F	VCL-25□25G13	E,F	A/Q
					2000		VL-25□25F20	P,E,F,K	VCL-25□25F20	E,F,K	A/Q
					2000		VL-25□25G20	E,F	VCL-20□25G20	E,F	A/Q
						630	VL-25H25D06	H	VCL-25H25D06	H	Q
						1250	VL-25H25D13	H	VCL-25H25D13	H	Q
						2000	VL-25H25D20	H	VCL-25H25D20	H	Q
						2500	VL-25H25D25	H	VCL-25H25D25-AS	H	Q
36	25					630	VL-36□25D06	P,H	VCL-36□25D06	H	P:A/Q, H:Q
						1250	VL-36□25D13	P,H	VCL-36□25D13	H	P:A/Q, H:Q
						2000	VL-36□25D20	P,H	VCL-36□25D20	H	P:A/Q, H:Q
						2500	VL-36□25D25	P,H	VCL-36□25D25	H	P:A/Q, H:Q

Note) 1. Ur = Rated voltage 2. Isc = Rated short-circuit current
3. Ir = Rated normal current 4. p = Phase distance
5. E,F and G types are cradles for MESG(Metal Enclosed Switchgear) and H type for MCSG(Metal Clad Switchgear)
6. For the partial replacement of 7.2kV 8/12.5kA VCB, in case of using the existing old type cradle and replacing breaker only, please order type B (Compatible with existing breaker). Compatibille busbars are required for fixed version. To replace VCB fully(breaker and cradle) please order type A for breaker and compatible cradle B.

Type of circuit breakers

7.2/12/17.5/24/25.8/36kV (VH-06/12/17/20/25/36)

Ur [kV]	Isc [kA]	Ir[A]					VCB		CRADLE		Connector
		p=150	p=210	p=254	p=275	p=320	Type	Version	Type	Version	
7.2	31.5	1250					VH-06□32A13	P,E,F,G	VCH-06□32A13	E,F,G	A/Q
							LVB-06□-32L/12	P,E,F,G,G/T	LCL-06□-32D/12	E,F,G,G/T	
		2000					VH-06□32A20	P,E,F,G	VCH-06□32A20	E,F,G	A/Q
							LVB-06□-32L/20	P,E,F,G,G/T	LCL-06□-32D/20	E,F,G,G/T	
			3150				VH-06□32B32	P,E,F,Fs,Gs,K,H	VCH-06□32B32	E,F,Fs,Gs,K,H	P,E,F,K:A/Q, Fs,Gs,H:Q
							LVB-06□-32L/30	P,E,F,G/T	LCL-06□-32D/30	E,F,G,G/T	
					3150		VH-06□40D32	H	VCH-06□40D32	K,H	K:A/Q,H:Q
	40	1250	1250				VH-06□40A13	P,E,F,Fs,G,Gs,K,H	VCH-06□40A13	E,F,Fs,G,Gs,K,H,Ha	P,E,F,Fs,G, Gs,K:A/Q,H:Q
							LVB-06□-40L/12	P,E,F,G,G/T	LCL-06□-40D/12	E,F,G,G/T	
		2000	2000				VH-06□40A20	P,E,F,Fs,G,Gs,K,H	VCH-06□40A20	E,F,Fs,G,Gs,K,H,Ha	P,E,F,Fs,G, Gs,K:A/Q,H:Q
							LVB-06□-40L/20	P,E,F,G,G/T	LCL-06□-40D/20	E,F,G,G/T	
			3150				VH-06□40B32	P,E,F,Fs,G,Gs,K,H	VCH-06□40B32	E,F,Fs,G,Gs,K,H,Ha	P,E,F,G,K:A/Q Fs,Gs,H:Q
							LVB-06□-40L/30	P,E,F,G/T	LCL-06□-40D/30	E,F,G,G/T	
					3150		VH-06□40D32	H	VCH-06□40D32	K,H	K:A/Q,H:Q
					4000		VH-06□40D40	P,K,H	VCH-06□40D40	K,Ha,Hb	Q
						5000	VH-06H40L50	H	VCH-06Ha40L50	Ha	Q
	50		1250				VH-06□50B13	P,H	VCH-06H50B13	H	Q
			2000				VH-06□50B20	P,H	VCH-06H50B20	H	Q
					2500		VH-06□50D25	P,H	VCH-06H50D25	H	Q
					3150		VH-06□50D32	P,H	VCH-06H50D32	H	Q
					4000		VH-06□50D40	P,K,H	VCH-06□50D40	K,Ha,Hb	Q
						5000	VH-06H50L50	H	VCH-06Ha50L50	Ha	Q
12	31.5	1250	1250				LVB-12G-32L/12-T2	G/T	LCL-12G-32D/12-T2	G/T	A/Q
		2000					LVB-12G-32L/20-T2	G/T	LCL-12G-32D/20-T2	G/T	A/Q
			3150				VH-12□32B32	Gs,K,H	VCH-12□32B32	Gs,K,H	K:A/Q,Gs,H:Q
							LVB-12G-32L/30-T2	G/T	LCL-12G-32D/30-T2	G/T	A/Q
	40	1250	1250				VH-12□40A(K)13	Gs,K,H	VCH-12□40A(K)13	Gs,K,H,Ha	Gs,K:A/Q,H:Q
							LVB-12G-40L/12-T2	G/T	LCL-12G-40D/12-T2	G/T	A/Q
		2000	2000				VH-12□40A(K)20	Gs,K,H	VCH-12□40A(K)20	Gs,K,H,Ha	K:A/Q,Gs,H:Q
							LVB-12G-40L/20-T2	G/T	LCL-12G-40D/20-T2	G/T	A/Q
			1250				VH-12□40B13	K,H	VCH-12□40B13	K,H	Q
			2000				VH-12□40B20	K,H	VCH-12□40B20	K,H	Q
			3150				VH-12□40B32	Gs,K,H	VCH-12□40B32	Gs,K,H,Ha	K:A/Q,Gs,H:Q
							LVB-12G-40L/30-T2	G/T	LCL-12G-40D/30-T2	G/T	A/Q
					3150		VH-12H40D32	H	VCH-12H40D32	H	Q
					4000		VH-12□40D40	P,K,H	VCH-12□40D40	K,Ha,Hb	Q
						5000	VH-12H40L50	H	VCH-12Ha40L50	Ha	Q
	50		1250				VH-12□50B13	P,H	VCH-12H50B13	H	Q
			2000				VH-12□50B20	P,H	VCH-12H50B20	H	Q
					2500		VH-12□50D25	P,H	VCH-12H50D25	H	Q
					3150		VH-12□50D32	P,H	VCH-12H50D32	H	Q
					4000		VH-12□50D40	P,K,H	VCH-12□50D40	K,Ha,Hb	Q
						5000	VH-12H50L50	H	VCH-12Ha50L50	Ha	Q
17.5	31.5		3150				VH-17H32B32	H	VCH-17H32B32	H,Ha	Q
					3150		VH-17H32D32	H	VCH-17H32D32	H	Q
	40		1250				VH-17□40B13	K,H	VCH-17□40B13	K,H	K:A/Q,H:Q
			2000				VH-17□40B20	K,H	VCH-17□40B20	K,H	K:A/Q,H:Q
			3150				VH-17H40B32	H	VCH-17H40B32	H,Ha	Q
					3150		VH-17H40D32	H	VCH-17H40D32	H	Q
					4000		VH-17□40D40	P,K,H	VCH-17□40D40	Ha,Hb	Q

Ur [kV]	Isc [kA]	Ir[A]				VCB		CRADLE		Connector
		p=150	p=210	p=275	p=300	Type	Version	Type	Version	
17.5	50		1250			VH-17□50B13	P,H	VCH-17H50B13	H	Q
			2000			VH-17□50B20	P,H	VCH-17H50B20	H	Q
				2500		VH-17□50D25	P,H	VCH-17H50D25	H	Q
				3150		VH-17□50D32	P,H	VCH-17H50D32	H	Q
				4000		VH-17□50D40	P,H	VCH-17□50D40	Ha,Hb	Q
24	25			2500		VH-20□25D25	P,H	VCH-20H25D25	H	Q
	31.5		1250			VH-20□32B13	P,H	VCH-20H32B13	H	Q
								VCH-20H32J13	H	Q
			2000			VH-20□32B20	P,H	VCH-20H32B20	H	Q
								VCH-20H32J20	H	Q
				1250		VH-20□32D13	P,H	VCH-20H32D13	H	Q
				2000		VH-20□32D20	P,H	VCH-20H32D20	H	Q
				3150		VH-20□32D32	P,H	VCH-20H32D32	H	Q
	40		1250			VH-20□40B13	P,H	VCH-20H40B13	H	Q
								VCH-20H40J13	H	Q
			2000			VH-20□40B20	P,H	VCH-20H40B20	H	Q
								VCH-20H40J20	H	Q
				1250		VH-20□40D13	P,H	VCH-20H40D13	H	Q
				2000		VH-20□40D20	P,H	VCH-20H40D20	H	Q
				3150		VH-20□40D32	P,H	VCH-20H40D32	H	Q
25.8	25			2500		VH-25□25D25	P,H	VCH-25H25D25	H	Q
	31.5		1250			VH-25□32B13	P,H	VCH-25H32B13	H	Q
								VCH-25H32J13	H	Q
			2000			VH-25□32B20	P,H	VCH-25H32B20	H	Q
								VCH-25H32J20	H	Q
				1250		VH-25□32D13	P,H	VCH-25H32D13	H	Q
				2000		VH-25□32D20	P,H	VCH-25H32D20	H	Q
				3150		VH-25□32D32	P,H	VCH-25H32D32	H	Q
	40		1250			VH-25□40B13	P,H	VCH-25H40B13	H	Q
								VCH-25H40J13	H	Q
			2000			VH-25□40B20	P,H	VCH-25H40B20	H	Q
								VCH-25H40J20	H	Q
				1250		VH-25□40D13	P,H	VCH-25H40D13	H	Q
				2000		VH-25□40D20	P,H	VCH-25H40D20	H	Q
				3150		VH-25□40D32	P,H	VCH-25H40D32	H	Q
36	25				1250	VH-36□25E13	P,H	VCH-36H25E13	H	Q
					2000	VH-36□25E20	P,H	VCH-36H25E20	H	Q
					3150	VH-36□25E32	P,H	VCH-36H25E32	H	Q
	31.5				1250	VH-36□32E13	P,H	VCH-36H32E13	H	Q
					2000	VH-36□32E20	P,H	VCH-36H32E20	H	Q
					3150	VH-36□32E32	P,H	VCH-36H32E32	H	Q
	40				1250	VH-36□40E13	P,H	VCH-36H40E13	H	Q
					2000	VH-36□40E20	P,H	VCH-36H40E20	H	Q
					3150	VH-36□40E32	P,H	VCH-36H40E32	H	Q

Note) 1. Ur = Rated voltage
2. Isc = Rated short-circuit current
3. Ir = Rated normal current
4. p = Phase distance
5. H type is MCSG style drawable type with a box type cradle for CB compartment construction.
6. G/T types are MCSG style drawable types with a cradle for builting in the switchgear , not a box type. (K of VCL type name indicates 4000A)
Example of G/T type : LVB-06G-32L/12-T2, LCL-06G-32D/12-T2
7. G/T types use LVB and LCL names.
8. E, F and G types provide cradles for MESG(Metal Enclosed Switchgear) and H, G/T types for MCSG(Metal Clad Switchgear).
9. In case of 7.2/12kV, 31.5kA/40kA H type: Please contact us.

Ratings - 7.2kV 8/12.5kA 400/630A

VL-06



Item			VL-06□08□04	VL-06□13□06
Rated voltage		Ur (kV)	7.2	
Rated normal current		Ir (A)	400	630
Rated frequency		fr (Hz)	50/60	
Rated short-circuit current		Isc (kA)	8	12.5
Rated short-time withstand current		Ik/tk (kA/s)	8/3	12.5/3
Rated short-circuit breaking capacity		(MVA)	100	160
Rated short-circuit making current		Ip (kA)	2.5×Isc (50Hz)/2.6×Isc (60Hz)	
Rated breaking time		(cycle)	3	
Rated withstand voltage	Power frequency (1 min)	Ud (kV)	20	
	Impulse (1.2×50μs)	Up (kV)	60	
Rated operating sequence			O-0.3s-CO-15s-CO	
Control voltage	Closing coil	(V)	AC/DC 100~130, AC/DC 200~250, DC 125, DC 24~30, DC 48~60, AC 48	
	Trip coil	(V)	AC/DC 100~130, AC/DC 200~250, DC 125, DC 24~30, DC 48~60, AC 48	
Auxiliary contacts			2a2b, 4a4b, 6a6b	
Rated opening time		(sec)	≤ 0.04	
No-load closing time		(sec)	≤ 0.06	
Type test class	Mechanical		M2	
	Electrical		E2 (List 1)	
	Capacitive current switching		C2	
Installation version	Fixed		P type	
	Drawout		E, F, G type (for MESG)	
Phase distance		(mm)	130	
Weight	Breaker (E, F, G type)	(kg)	37	37
	Cradle (E, F, G type)	(kg)	18, 25, 32	19, 26, 33
Dimensions	Breaker (P, E, F, G type)		Page 97~98	
	Cradle (E, F, G type)		Page 98~99	
Standards			IEC 62271-100, JEC 2300/JIS C 4603, V-check(KESCO)	

Ratings - 7.2/12/17.5kV 20/25kA 630/1250/2000A

VL-06/12/17



Item			VL-06□20/25□06/13/20			VL-12□20/25□06/13/20			VL-17□20/25□06/13/20		
Rated voltage		Ur (kV)	7.2			12			17.5		
Rated normal current		Ir (A)	630	1250	2000	630	1250	2000	630	1250	2000
Rated frequency		fr (Hz)	50/60								
Rated short-circuit current		Isc (kA)	20, 25								
Rated short-time withstand current		Ik/tk (kA/s)	20/3, 25/3								
Rated short-circuit breaking capacity		(MVA)	250/310			410/520			600/750		
Rated short-circuit making current		Ip (kA)	2.5×Isc (50Hz)/2.6×Isc (60Hz)								
Rated breaking time		(cycle)	3								
Rated withstand voltage	Power frequency (1 min)	Ud (kV)	20			28			38		
	Impulse (1.2×50μs)	Up (kV)	60			75			95		
Rated operating sequence			O-0.3s-CO-15s-CO								
Control voltage	Closing coil	(V)	DC 24~30, DC 48~60, DC 110, DC 125, DC 220~250, AC 48, AC 100~130, AC 220~250								
	Trip coil	(V)	DC 24~30, DC 48~60, DC 110, DC 125, DC 220~250, AC 48, AC 100~130, AC 220~250								
Auxiliary contacts			4a4b, 10a10b								
Rated opening time		(sec)	≤ 0.04								
No-load closing time		(sec)	≤ 0.06								
Type test class	Mechanical		M2								
	Electrical		E2 (List 3)								
	Capacitive current switching		C2								
Installation version *	Fixed		P type								
	Drawout		E, F, G type (for MESG), H type (for MCSG)			E, F type (for MESG), H type (for MCSG)					
Phase distance **		(mm)	150			150 (210)			150 (210)		
Weight	Breaker (E, F, G, K type)	(kg)	100	100	130	115 (120)	115 (120)	130 (140)	115 (120)	115 (120)	130 (140)
	Cradle (E, F, G, K type)	(kg)	170	170	180	170 (200)	115 (120)	180 (200)	170 (200)	170 (200)	180 (200)
Dimensions	Breaker (P, E, F, G, K, H type)		Page 100~113			Page 134~150			Page 134~150		
	Cradle (E, F, G, K type)		Page 100~113			Page 134~150			Page 134~150		
	Cradle (K, H type)		Page 100~113			Page 134~150			Page 134~150		
Standards			IEC 62271-100, KERI/KEMA, V-check(KESCO)								

* H type is a box type cradle with CB compartment style structure.
** ( ) displays option of phase distance.

Ratings - 7.2/12/17.5kV 31.5kA 630/1250/2000/2500A

VL-06/12/17



Item			VL-06□32□06/13/20			VL-12□32□06/13/20/25				VL-17□32□06/13/20/25			
Rated voltage		Ur (kV)	7.2			12				17.5			
Rated normal current		Ir (A)	630	1250	2000	630	1250	2000	2500	630	1250	2000	2500
Rated frequency		fr (Hz)	50/60										
Rated short-circuit current		Isc (kA)	31.5										
Rated short-time withstand current		Ik/tk (kA/s)	31.5/3(4 Note1)										
Rated short-circuit breaking capacity		(MVA)	393			655				955			
Rated short-circuit making current		Ip (kA)	2.5×Isc (50Hz)/2.6×Isc (60Hz)										
Rated breaking time		(cycle)	3										
Rated withstand voltage	Power frequency (1 min)	Ud (kV)	20			28				38			
	Impulse (1.2×50μs)	Up (kV)	60			75				95			
Rated operating sequence			O-0.3s-CO-15s-CO										
Control voltage	Closing coil	(V)	DC 24~30, DC 48~60, DC 110, DC 125, DC 220~250, AC 48, AC 100~130, AC 220~250										
	Trip coil	(V)	DC 24~30, DC 48~60, DC 110, DC 125, DC 220~250, AC 48, AC 100~130, AC 220~250										
Auxiliary contacts			4a4b, 10a10b										
Rated opening time		(sec)	≤ 0.04										
No-load closing time		(sec)	≤ 0.06										
Type test class	Mechanical		M2										
	Electrical		E2 (List 3)										
	Capacitive current switching		C2										
Installation version *	Fixed		P type			P type				P type			
	Drawout		H type (for MCSG)	E, F, Fs, G, Gs, K type (for MESG) H type (for MCSG)		H type (for MCSG)	Gs, K type (for MESG) H type (for MCSG)		H type (for MCSG)	H type (for MCSG)			
Phase distance **		(mm)	150			150 (210)			210 (275)	150 (210)			210 (275
Weight	Breaker (H type)	(kg)	100	100	130	115/120	115/120	130/140	160/175	115/120	115/120	130/140	160/175
	Cradle (H type)	(kg)	170	170	200	170/200	170/200	170/200	260/290	170/200	170/200	170/200	260/290
	Breaker (P, E, F, G, K type)	(kg)	85	85	100	85/100	85/100	100/115	120/135	85/100	85/100	100/115	120/135
Dimensions	Breaker (P, E, F, Fs, G, Gs, K, H type)		Page 114~133			Page 151~169							
	Cradle (E, F, Fs, G, Gs, K, H type)		Page 114~133			Page 151~169							
Standards			IEC 62271-100, KERI, V-check(KESCO)										

* H type is a box type cradle with CB compartment style structure.
** ( ) displays option of phase distance.
Note1) For Icw 4s, please contact us..

Ratings - 24/25.8kV 12.5/16/25kA 630/1250/2000/2500A

VL-20/25



Item			VL-20, 25□13□06/13		VL-20, 25□16□06/13		VL-20, 25□25□06/13/20/25			
Rated voltage		Ur (kV)	24/25.8							
Rated normal current		Ir (A)	630	1250	630	1250	630	1250	2000	2500
Rated frequency		fr (Hz)	50/60							
Rated short-circuit current		Isc (kA)	12.5		16		25			
Rated short-time withstand current		Ik/tk (kA/s)	12.5/3 Note2)		16/3 Note2		25/3 Note2			
Rated short-circuit breaking capacity		(MVA)	520/560		665/715		1040/1120			
Rated short-circuit making current		Ip (kA)	2.5×Isc (50Hz)/2.6×Isc (60Hz)							
Rated breaking time		(cycle)	3							
Rated withstand voltage	Power frequency (1 min)	Ud (kV)	50/60							
	Impulse (1.2×50μs)	Up (kV)	125							
Rated operating sequence			O-0.3s-CO-15s-CO							
Control voltage	Closing coil	(V)	DC 24~30, DC 48~60, DC 110, DC 125, DC 220~250, AC 48, AC 100~130, AC 220~250							
	Trip coil	(V)	DC 24~30, DC 48~60, DC 110, DC 125, DC 220~250, AC 48, AC 100~130, AC 220~250							
Auxiliary contacts			4a4b, 10a10b							
Rated opening time		(sec)	≤ 0.04							
No-load closing time		(sec)	≤ 0.07							
Type test class	Mechanical		M2							
	Electrical		E2 (List 3)							
	Capacitive current switching		C2							
Installation version *	Fixed		P type							-
	Drawout		E,F,G type (for MESG) / K, H type (for MCSG)							H type (for MCSG)
Phase distance **		(mm)	210/265/275							275
Weight	Breaker (H type)	(kg)	120 (130)		130 (140)			150 (160)		
	Cradle (H type)	(kg)	200 (220)					220 (250)		
	Breaker (P, E, F, G, K type)	(kg)	110	115	120			135		-
Dimensions	Breaker (P, E, F, G, K, H type)		Page 170~175		Page 175~187			Page 187~192		
	Cradle (E, F, G, K type)		Page 192~201		Page 192~201			Page 192~201		
	Cradle (H type)		Page 192~201		Page 192~201			Page 192~201		
Standards			IEC 62271-100, KERI, V-check(KESCO)							

* H type is a box type cradle with CB compartment style structure.
** ( ) displays option of phase distance.

Note 1) 24/25.8kV 25kA 2000A(Phase distance 210mm): 60Hz available only
2) For Icw 4s, please contact us..

Ratings - 36kV 25kA 630/1250/2000/2500A

VL-36



Item			VL-36□25□06	VL-36□25□13	VL-36□25□20	VL-36□25□25
Rated voltage		Ur (kV)	36			
Rated normal current		Ir (A)	630	1250	2000	2500
Rated frequency		fr (Hz)	50/60			
Rated short-circuit current		Isc (kA)	25			
Rated short-time withstand current		Ik/tk (kA/s)	25/3(4 Note1))			
Rated short-circuit breaking capacity		(MVA)	1560			
Rated short-circuit making current		Ip (kA)	62.5/65			
Rated breaking time		(cycle)	3			
Rated withstand voltage	Power frequency (1 min)	Ud (kV)	70			
	Impulse (1.2×50μs)	Up (kV)	170			
Rated operating sequence			O-0.3s-CO-15s-CO			
Control voltage	Closing coil	(V)	DC 24~30, DC 48~60, DC 110, DC 125, DC 220~250, AC 48, AC 100~130, AC 220~250			
	Trip coil	(V)	DC 24~30, DC 48~60, DC 110, DC 125, DC 220~250, AC 48, AC 100~130, AC 220~250			
Auxiliary contacts			4a4b, 10a10b			
Rated opening time		(sec)	≤ 0.04			
No-load closing time		(sec)	≤ 0.07			
Type test class	Mechanical		M2			
	Electrical		E2 (List 3)			
	Capacitive current switching		C2			
Installation version	Fixed		P type			
	Drawout		H type (for MCSG)			
Phase distance		(mm)	275			
Weight	Breaker (H type)	(kg)	260	260	280	300
	Cradle (H type)	(kg)	440	440	450	460
Dimensions	Breaker (P, H type)		Page 202~207			
	Cradle (H type)		Page 202~207			
Standards			IEC 62271-100			

Note1) For Icw 4s, please contact us.

Ratings - 7.2/12kV 31.5/40kA 1250/2000/3150A

LVB-06/12



Item			LVB-06□-32□32	LVB-06□-40□12, 20, 32			LVB-12□-32□32	LVB-12□-40□12, 20, 32		
Rated voltage		Ur (kV)	7.2	7.2			12	12		
Rated normal current		Ir (A)	3150 *	1250	2000	3150 *	3150 *	1250	2000	3150 *
Rated frequency		fr (Hz)	50/60							
Rated short-circuit current		Isc (kA)	31.5	40			31.5	40		
Rated short-time withstand current		Ik/tk (kA/s)	31.5/3	40/3			31.5/3	40/3		
Rated short-circuit breaking capacity		(MVA)	393	499			655	831		
Rated short-circuit making current		Ip (kA)	2.5×Isc (50Hz)/2.6×Isc (60Hz)							
Rated breaking time		(cycle)	3							
Rated withstand voltage	Power frequency (1 min)	Ud (kV)	20				28			
	Impulse (1.2×50μs)	Up (kV)	60				75			
Rated operating sequence			O-0.3s-CO-3min-CO							
Control voltage	Closing coil	(V)	DC 48, DC 110, DC 125, DC 220~250, AC 48, AC 110, AC 220							
	Trip coil	(V)	DC 48, DC 110, DC 125, DC 220~250, AC 48, AC 110, AC 220							
Auxiliary contacts			4a4b, 10a10b							
Rated opening time		(sec)	≤ 0.04							
No-load closing time		(sec)	≤ 0.06							
Type test class	Mechanical		M2							
	Electrical		E2 (List 3)							
	Capacitive current switching		C2							
Installation version	Fixed		P type				-			
	Drawout *		E,F,G type (for MESG), MCSG Cradle				MCSG Cradle			
Phase distance		(mm)	210	150		210	210	150		210
Weight	Breaker (MESG, MCSG)	(kg)	210, 220	135, 160	135, 160	210, 220	220	164	165	220
	Cradle (MESG, MCSG)	(kg)	135, 155	55, 110	63, 117	135, 155	155	110	117	155
Dimensions	Breaker (MESG, MCSG)		Page 212~213	Page 208~209		Page 212~213	Page 212~213	Page 208~209		Page 212~213
	Cradle (MESG, MCSG)		Page 214~215	Page 210~211		Page 214~215	Page 214~215	Page 210~211		Page 214~215
Standards			IEC 62271-100							

* MCSG style drawable type provide a cradle for builting in the switchgear, not a box type for CB compartment. Ordering type is LVB.

Note 1) H type that is a box type cradle for enabling a CB compartment in MCSG is under development. Consult us for ordering.
2) Some LVB is the ordering name of the switchboard for export

Ratings - 7.2/12/17.5kV 40kA 1250/2000A

VH-06/12/17



Item			VH-06/12□40□13/20				VH-06/12/17□40□13/20					
Rated voltage		Ur (kV)	7.2		12		7.2		12		17.5	
Rated normal current		Ir (A)	1250	2000	1250	2000	1250	2000	1250	2000	1250	2000
Rated frequency		fr (Hz)	50/60									
Rated short-circuit current		Isc (kA)	40									
Rated short-time withstand current		Ik/tk (kA/s)	40/4									
Rated short-circuit breaking capacity		(MVA)	499		831		499		831		1212	
Rated short-circuit making current		Ip (kA)	2.5×Isc (50Hz)/2.6×Isc (60Hz)									
Rated breaking time		(cycle)	3									
Rated withstand voltage	Power frequency (1 min)	Ud (kV)	20		28 (42)		20		28 (42)		38	
	Impulse (1.2×50μs)	Up (kV)	60		75		60		75		95	
Rated operating sequence			O-0.3s-CO-3min-CO				O-0.3s-CO-15s-CO					
Control voltage	Closing coil	(V)	DC 48, DC 110, DC 125, DC 220~250, AC 48, AC 110, AC 220									
	Trip coil	(V)	DC 48, DC 110, DC 125, DC 220~250, AC 48, AC 110, AC 220									
Auxiliary contacts			4a4b, 10a10b									
Rated opening time		(sec)	≤ 0.04									
No-load closing time		(sec)	≤ 0.06									
Type test class	Mechanical		M2									
	Electrical		E2 (List 3)									
	Capacitive current switching		C2									
Installation version	Drawout		Fs, Gs, K, H type				K, H type					
Phase distance		(mm)	150				210					
Weight	Breaker (H type)	(kg)	165				215					
	Cradle (H type)	(kg)	205				226					
Dimensions	Breaker (Fs, Gs, K, H type)		Page 216~232				Page 216~232					
	Cradle (Fs, Gs, K, H type)		Page 216~232				Page 216~232					
Standards			IEC 62271-100									

Ratings - 7.2/12/17.5kV 31.5/40kA 3150A

VH-06/12/17



Item			VH-06/12/17□32/40□32				
Rated voltage		Ur (kV)	7.2	12	17.5		
Rated normal current		Ir (A)	3150				
Rated frequency		fr (Hz)	50/60				
Rated short-circuit current		Isc (kA)	31.5/40				
Rated short-time withstand current		Ik/tk (kA/s)	40/4				
Rated short-circuit breaking capacity		(MVA)	393/499	655/831	955/1212		
Rated short-circuit making current		Ip (kA)	2.5×Isc (50Hz)/2.6×Isc (60Hz)				
Rated breaking time		(cycle)	3				
Rated withstand voltage	Power frequency (1 min)	Ud (kV)	20	28 (42)	38		
	Impulse (1.2×50μs)	Up (kV)	60	75	95		
Rated operating sequence			O-0.3s-CO-15s-CO				
Control voltage	Closing coil	(V)	DC 48, DC 110, DC 125, DC 220~250, AC 48, AC 110, AC 220				
	Trip coil	(V)	DC 48, DC 110, DC 125, DC 220~250, AC 48, AC 110, AC 220				
Auxiliary contacts			4a4b, 10a10b				
Rated opening time		(sec)	≤ 0.04				
No-load closing time		(sec)	≤ 0.06				
Type test class	Mechanical		M2				
	Electrical		E2 (List 3)				
	Capacitive current switching		C2				
Installation version	Drawout		Fs, Gs, K, H type	Gs, K, H type	K, H type	K type	K type
Phase distance		(mm)	210	210	210	254	275
Weight	Breaker (H type)	(kg)	240	240	240	280	280
	Cradle (H type)	(kg)	235	235	235	250	250
Dimensions	Breaker (Fs, Gs, K, H type)		Page 216~232				
	Cradle (Fs, Gs, K, H type)		Page 216~232				
Standards			IEC 62271-100				

Ratings - 7.2/12/17.5kV 50kA 1250/2000/2500/3150A

VH-06/12/17



Item			VH-06□50□13/20/25/32				VH-12□50□13/20/25/32				VH-17□50□13/20/25/32			
Rated voltage		Ur (kV)	7.2				12				17.5			
Rated normal current		Ir (A)	1250	2000	2500	3150	1250	2000	2500	3150	1250	2000	2500	3150
Rated frequency		fr (Hz)	50/60											
Rated short-circuit current		Isc (kA)	50											
Rated short-time withstand current		Ik/tk (kA/s)	50/3											
Rated short-circuit breaking capacity		(MVA)	623				1039				1515			
Rated short-circuit making current		Ip (kA)	2.5×Isc (50Hz)/2.6×Isc (60Hz)											
Rated breaking time		(cycle)	3											
Rated withstand voltage	Power frequency (1 min)	Ud (kV)	20				28 (42) Note1)				38			
	Impulse (1.2×50μs)	Up (kV)	60				75				95			
Rated operating sequence			O-0.3s-CO-15s-CO / O-0.3s-CO-3min-CO											
Control voltage	Closing coil	(V)	DC 48, DC 110, DC 125, DC 220~250, AC 48, AC 110, AC 220											
	Trip coil	(V)	DC 48, DC 110, DC 125, DC 220~250, AC 48, AC 110, AC 220											
Auxiliary contacts			4a4b, 10a10b											
Rated opening time		(sec)	≤ 0.04											
No-load closing time		(sec)	≤ 0.06											
Type test class	Mechanical		M2											
	Electrical		E2 (List 3)											
	Capacitive current switching		C2											
Installation version *	Fixed		P type											
	Drawout		H type (for MCSG)											
Phase distance		(mm)	210		275		210		275		210		275	
Weight	Breaker (H type)	(kg)	230		287	290	230		287	290	230		287	290
	Cradle (H type)	(kg)	175		320	320	175		320	320	175		320	320
Dimensions	Breaker (P, H type)		Page 233~236				Page 233~236				Page 233~236			
	Cradle (H type)		Page 233~236				Page 233~236				Page 233~236			
Standards			IEC 62271-100, KERI/KEMA, V-check(KESCO)											

* H type is a box type cradle with CB compartment style structure.
Note1) Contact us.

Ratings - 7.2/12/17kV 40/50kA 4000A

VH-06/12/17



Item			VH-06/12/17□40□40			VH-06/12/17□50□40		
Rated voltage		Ur (kV)	7.2	12	17.5	7.2	12	17.5
Rated normal current		Ir (A)	4000					
Rated frequency		fr (Hz)	50/60					
Rated short-circuit current		Isc (kA)	40			50		
Rated short-time withstand current		Ik/tk (kA/s)	40/4			50/4		
Rated short-circuit breaking capacity		(MVA)	499	831	1212	624	1040	1515
Rated short-circuit making current		Ip (kA)	104			130		
Rated breaking time		(cycle)	3					
Rated withstand voltage	Power frequency (1 min)	Ud (kV)	20	28(42)	38	20	28(42)	38
	Impulse (1.2×50μs)	Up (kV)	60	75	95	60	75	95
Rated operating sequence			O-0.3s-CO-15s-CO					
Control voltage	Closing coil	(V)	DC 48, DC 110, DC 125, DC 220~250, AC 48, AC 110, AC 220~250					
	Trip coil	(V)	DC 48, DC 110, DC 125, DC 220~250, AC 48, AC 110, AC 220~250					
Auxiliary contacts			4a4b, 10a10b					
Rated opening time		(sec)	≤ 0.04					
No-load closing time		(sec)	≤ 0.06					
Type test class	Mechanical		M2					
	Electrical		E2 (List 1)					
	Capacitive current switching		C2					
Installation version	Fixed		-	-	P type	-	-	P type
	Drawout		H type	H type	H type	H type	H type	H type
Phase distance		(mm)	275					
Weight	Breaker (H type)	(kg)	395					
	Cradle (H type)	(kg)	200					
Dimensions	Breaker (P, H type)		Page 237~240					
	Cradle (H type)		Page 237~240					
Standards			IEC 62271-100					

Ratings - 7.2/12kV 40/50kA 5000A

VH-06/12



Item			VH-06H40, 50L50	VH-12H40, 50L50
Rated voltage		Ur (kV)	7.2	12
Rated normal current		Ir (A)	5000	
Rated frequency		fr (Hz)	50/60	
Rated short-circuit current		Isc (kA)	40/50	
Rated short-time withstand current		Ik/tk (kA/s)	50/4	
Rated short-circuit breaking capacity		(MVA)	624	1040
Rated short-circuit making current		Ip (kA)	130	
Rated breaking time		(cycle)	3	
Rated withstand voltage	Power frequency (1 min)	Ud (kV)	20	20
	Impulse (1.2×50μs)	Up (kV)	60	75
Rated operating sequence			O-0.3s-CO-15s-CO	
Control voltage	Closing coil	(V)	DC 48, DC 110, DC 125, DC 220~250, AC 48, AC 110, AC 220~250	
	Trip coil	(V)	DC 48, DC 110, DC 125, DC 220~250, AC 48, AC 110, AC 220~250	
Auxiliary contacts			4a4b, 10a10b	
Rated opening time		(sec)	≤ 0.04	
No-load closing time		(sec)	≤ 0.06	
Type test class	Mechanical		M2	
	Electrical		E2 (List 1)	
	Capacitive current switching		C2	
Installation version	Drawout		H type (for MCSG)	
Phase distance		(mm)	320	
Weight	Breaker (H type)	(kg)	430	
	Cradle (H type)	(kg)	200	
Dimensions	Breaker (H type)		Page 241~242	
	Cradle (H type)		Page 241~242	
Standards			IEC 62271-100	

Ratings - 24/25.8kV 25/31.5/40kA 1250/2000/2500/3150A

VH-20/25



Item			VH-20,25□25□25	VH-20,25□32□13/20/32			VH-20,25□40□13/20/32		
Rated voltage		Ur (kV)	24/25.8						
Rated normal current		Ir (A)	2500	1250	2000	3150	1250	2000	3150
Rated frequency ***		fr (Hz)	50/60	60			50/60		
Rated short-circuit current		Isc (kA)	25	31.5			40		
Rated short-time withstand current		Ik/tk (kA/s)	25/3	31.5/3			40/3		
Rated short-circuit breaking capacity		(MVA)	1039/1117	1309/1407			1662/1787		
Rated short-circuit making current		Ip (kA)	2.5×Isc (50Hz)/2.6×Isc (60Hz)	2.6×Isc (60Hz)			2.5×Isc (50Hz)/2.6×Isc (60Hz)		
Rated breaking time		(cycle)	3						
Rated withstand voltage	Power frequency (1 min)	Ud (kV)	50 (65) Note1)						
	Impulse (1.2×50μs)	Up (kV)	125						
Rated operating sequence ****			O-0.3s-CO-15s-CO / O-0.3s-CO-3min-CO						
Control voltage	Closing coil	(V)	DC 48, DC 110, DC 125, DC 220~250, AC 48, AC 110, AC 220						
	Trip coil	(V)	DC 48, DC 110, DC 125, DC 220~250, AC 48, AC 110, AC 220						
Auxiliary contacts			4a4b, 10a10b						
Rated opening time		(sec)	≤ 0.04						
No-load closing time		(sec)	≤ 0.06						
Type test class	Mechanical		M2						
	Electrical		E2 (List 3)						
	Capacitive current switching		C2						
Installation version *	Fixed		P type						
	Drawout		H type (for MCSG)						
Phase distance **		(mm)	275	210 (275)	210 (275)	275	210 (275)	210 (275)	275
Weight	Breaker (H type)	(kg)	295	256 (273)	256 (273)	318	256 (273)	256 (273)	318
	Cradle (H type)	(kg)	316	257 (284)	257 (284)	316	257 (284)	257 (284)	316
Dimensions	Breaker (P, H type)		Page 243~251	Page 243~251			Page 243~251		
	Cradle (H type)		Page 243~251	Page 243~251			Page 243~251		
Standards			IEC 62271-100, KERI/KEMA, V-check(KESCO)						

* H type is a box type cradle with CB compartment style structure.
** ( ) displays option of phase distance.
*** Rated frequency(fr) 50Hz is certified only to 24kV.
**** Rated operating sequence O-0.3s-CO-15s-CO is certified only to 24kV 40kA.

Note1) Contact us.

Ratings - 36kV 25/31.5/40kA 1250/2000/3150A

VH-36



Item			VH-36□25□13/20/32			VH-36□32□13/20/32			VH-36□40□13/20/32		
Rated voltage		Ur (kV)	36								
Rated normal current		Ir (A)	1250	2000	3150	1250	2000	3150	1250	2000	3150
Rated frequency		fr (Hz)	50/60								
Rated short-circuit current		Isc (kA)	25			31.5			40		
Rated short-time withstand current		Ik/tk (kA/s)	25/3			31.5/3			40/3		
Rated short-circuit breaking capacity		(MVA)	1559			1964			2494		
Rated short-circuit making current		Ip (kA)	2.5×Isc (50Hz)/2.6×Isc (60Hz)								
Rated breaking time		(cycle)	3								
Rated withstand voltage	Power frequency (1 min)	Ud (kV)	70 (95) Note1								
	Impulse (1.2×50μs)	Up (kV)	170								
Rated operating sequence			O-0.3s-CO-3min-CO								
Control voltage	Closing coil	(V)	DC 48, DC 110, DC 125, DC 220~250, AC 48, AC 110, AC 220								
	Trip coil	(V)	DC 48, DC 110, DC 125, DC 220~250, AC 48, AC 110, AC 220								
Auxiliary contacts			4a4b, 10a10b								
Rated opening time		(sec)	≤ 0.04								
No-load closing time		(sec)	≤ 0.06								
Type test class	Mechanical		M2								
	Electrical		E2 (List 3)								
	Capacitive current switching		C2								
Installation version *	Fixed		P type								
	Drawout		H type (for MCSG)								
Phase distance		(mm)	300								
Weight	Breaker (H type)	(kg)	400		490	400		490	400		490
	Cradle (H type)	(kg)	700		750	700		750	700		750
Dimensions	Breaker (P, H type)		Page 252~255			Page 252~255			Page 252~255		
	Cradle (H type)		Page 252~255			Page 252~255			Page 252~255		
Standards			IEC 62271-100, KERI/KEMA, V-check(KESCO)								

* H type is a box type cradle with CB compartment style structure.
Note1) Contact us.

Accessories





Mounting Position	Type	Accessory	Supplied as			Remarks	page
			VL: 7.2kV 8/12.5kA	VL: 20/25kA	VH		
Breaker (Internal)	M	Motor	●	●	●	Attached at the factory	61
	CC	Closing Coil	●	●	●	Attached at the factory	62
	TC	Trip Coil	●	●	●	Attached at the factory	63
	A1	Secondary Trip Coil	Option	Option	Option	Attached at the factory	64
	A2	Secondary Trip Coil with TCM Contact	-	Option	Option	Attached at the factory	64, 80
	T9	Current Trip Coil	Option	Option	-	Attached at the factory	65
	SA (SQ)	Auxiliary Contact 2a2b	●	-	-	Attached at the factory	66
		Auxiliary Contact 4a4b	Option	●	●		
		Auxiliary Contact 6a6b	Option	-	-		
		Auxiliary Contact 10a10b	-	Option	Option		
	U	Under Voltage Trip Coil	Option	Option	Option	Attached at the factory	67
	A3	Position S/W(Test: 1a1b, Service: 2b)	Option	Option	Option	Attached at the factory	68
	A4	Position S/W(Test: 2a, Service: 2a)	Option	Option	Option	Attached at the factory	68
	A5	Position S/W(Test: 1a1b, Service: 1a1b)	Option	Option	Option	Attached at the factory	68
	A6	Latch Checking Switch	-	-	Option	Attached at the factory	69
	C	Counter	●	●	●	Attached at the factory	69
	A7	Keylock	Option	Option	Option	Attached at the factory	70
	A8	Button Padlock	Option	Option	Option	Attached at the factory	71
	A9	Button cover	Option	Option	Option	Attached at the factory	72
	AA	Lead Wire: A/Q type connector	Option	Option	Option	Attached at the factory	73
	AB	Plug/Terminal for Lead Wire	Option	Option	Option	Attached at the factory	73
	AC	Plug Interlock	-	Option	Option	Attached at the factory	74
	AD	Padlock (H type)	-	Option	Option	Attached at the factory	74
	AE	MOC(Mechanical Operated Cell Switch	-	Option	Option	Attached at the factory	75
	AF	Locking Magnet	-	Option	Option	Attached at the factory	76
	AJ	Door Interlock	-	Option	Option	Attached at the factory	86
	AO	Lead Wire: A type connector (Special Color: Blue)	Option	Option	-	Attached at the factory	88
		Trip Coil Monitoring Contact	●	●	●	Attached at the factory	87
Breaker (External)	CTD1	Condenser Trip Device(AC110V)	Option	Option	Option	-	79
	CTD2	Condenser Trip Device(AC220V)	Option	Option	Option	-	79
	UDC1	UVT Time Delay Controller(AD110V)	Option	Option	Option	-	80
	UDC2	UVT Time Delay Controller(AD220V)	Option	Option	Option	-	80
	UDC3	UVT Time Delay Controller(AD48V)	Option	Option	Option	-	80
	CTU	Coil Test Unit	Option	Option	Option	-	78
	TM	Temperature Monitoring	-	Option	Option	-	81

* ●: Basic Installation

Accessories





Mounting Position	Type	Accessory	Supplied as			Remarks	page
			VL: 7.2kV 8/12.5kA	VL: 20/25kA	VH		
Cradle	A1	ES(Earthing Switch)\ without Option	-	Option	Option	Attached at the factory	82
	A2	ES(Earthing Switch) with Position Switch(2a2b)	-	Option	Option	Attached at the factory	82
	A4	ES(Earthing Switch) with Position Switch(6a6b)	-	Option	Option	Attached at the factory	82
	A5	Keylock for ES(Earthing Switch)	-	Option	Option	Attached at the factory	83
	A6	Locking magnet(DC110V) for ES(Earthing Switch)	-	Option	Option	Attached at the factory	83
	A7	Locking magnet(DC220V) for ES(Earthing Switch)	-	Option	Option	Attached at the factory	83
	A8	Locking magnet(DC125V) for ES(Earthing Switch)	-	Option	Option	Attached at the factory	83
	A9	Locking magnet(DC24V) for ES(Earthing Switch)	-	Option	Option	Attached at the factory	83
	AA	Locking magnet(DC48V) for ES(Earthing Switch)	-	Option	Option	Attached at the factory	83
	AB	Locking magnet(AC48V) for ES(Earthing Switch)	-	Option	Option	Attached at the factory	83
	AC	Locking magnet(AC110V) for ES(Earthing Switch)	-	Option	Option	Attached at the factory	83
	AD	Locking magnet(AC220V) for ES(Earthing Switch)	-	Option	Option	Attached at the factory	83
	AE	Shutter padlock	-	Option	Option	Attached at the factory	84
	AF	TOC(Truck Operated Cell Switch)	-	Option	Option	Attached at the factory	84
	AG	MOC(Mechanical Operated Cell Switch)	-	Option	Option	Attached at the factory	83
	AH	Door	-	Option	Option	Attached at the factory	85
	AJ	Door Interlock	-	Option	Option	Attached at the factory	86
	AK	Door Emergency Push Button	-	Option	Option	Attached at the factory	86
	AL	Temperature Sensor	-	Option	Option	Attached at the factory	87
	AM	Type H Lead Wire 4a4b (Normal cable)	-	Option	Option	Attached at the factory	88
	AN	Type H Lead Wire 10a10b (Normal cable)	-	Option	Option	Attached at the factory	88
	AO	Type H Lead Wire 4a4b) (Flame retardant cable)	-	Option	Option	Attached at the factory	88
		Door padlock	-	Option	Option	Attached at the factory	88

Motor: M

Installed inside of a breaker as standard

VL type

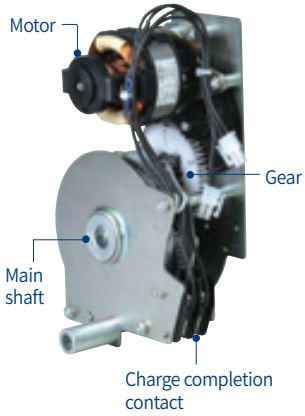

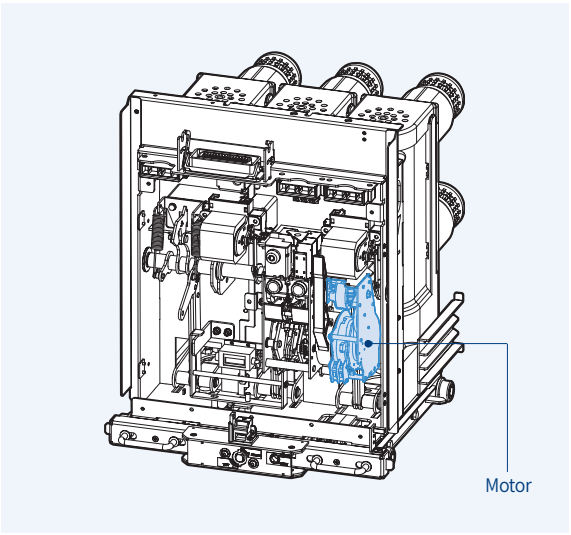

- Charge the closing spring of a circuit breaker by the external power source. When the charging is complete, control power of the motor will be "OFF" by the built-in Limit S/W. Without the external power source, charge manually.
- Operating voltage range (IEC 60947) 85%~110%Vn

Item	VL Type							
Input voltage (Vn)	DC 24~30V	DC 48~60V	DC 110V	DC 125V	DC 220V	AC 48V	AC 100~130V	AC 200~250V
Load current (A)	≤ 5	≤ 3	≤ 1	≤ 1	≤ 0.5	≤ 3	≤ 1	≤ 0.5
Starting current (A)	5 times of load current							
Charge time	Within 5 sec.							

Note) Rated operation and control voltage range, see page 65.

VH type



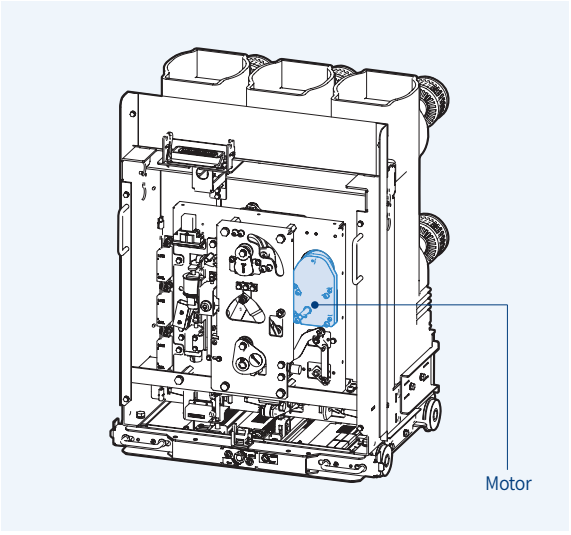

Item	VH Type						
Input voltage (Vn)	DC 48V	DC 110V	DC 125V	DC 220V	AC 48V	AC 110V	AC 220V
Load current (A)	≤ 6	≤ 3	≤ 3	≤ 2.6	≤ 6	≤ 3	≤ 2.6
Starting current (A)	≤ 30	≤ 20	≤ 20	≤ 17	≤ 30	≤ 20	≤ 17
Charge time	Within 12 sec.						

Note) Rated operation and control voltage range, see page 65.

Accessories

Closing Coil: C

Installed inside of a breaker as standard

VL type



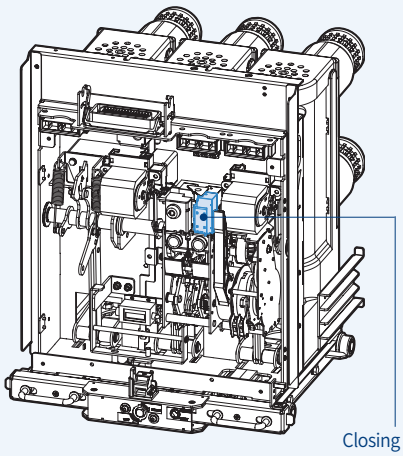

- It is a control device which closes a circuit breaker, when applying voltage continuously or instantaneously over 200ms to the coil control terminals.

Item	VL Type							
Input voltage (Vn)	DC 24~30V	DC 48~60V	DC 110V	DC 125V	DC 220V	AC 48V	AC 100~130V	AC 200~250V
Power consumption (inrush, W)						200		
Power consumption (steady, W)						≤ 5		
Rated current (A)	≤ 10	≤ 5	≤ 4		≤ 2	-		

Note) Rated operation and control voltage range, see page 65.

VH type



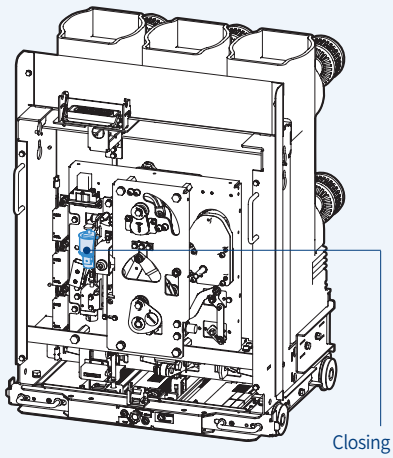

- It is a control device which closes a circuit breaker, when applying voltage continuously about 45ms to the coil control terminals. Electrical pumping preventing circuit is built in.

Item	VH Type						
Input voltage (Vn)	DC 48V	DC 110V	DC 125V	DC 220V	AC 48V	AC 110V	AC 220V
Rated current (A)	≤ 8	≤ 3	≤ 3.5	≤ 2.5	≤ 8	≤ 3	≤ 2.5

Note) Rated operation and control voltage range, see page 65.

Trip Coil: T

Installed inside of a breaker as standard

VL type



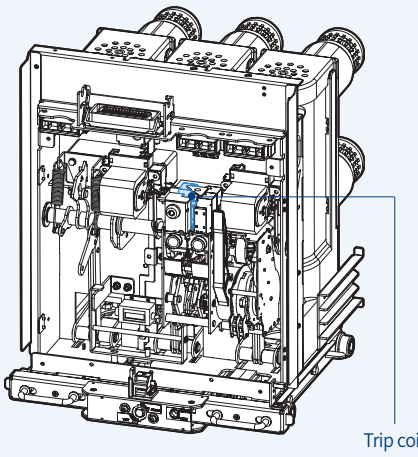

- It is a control device which trips a circuit breaker from remote place, when applying voltage continuously or instantaneously over 35ms to coil control terminals.
- When UVT coil is installed, its location is changed.

Item	VL Type							
Input voltage (Vn)	DC 24~30V	DC 48~60V	DC 110V	DC 125V	DC 220V	AC 48V	AC 100~130V	AC 200~250V
Power consumption (inrush, W)						200		
Power consumption (steady, W)						≤ 5		
Rated current (A)	≤ 10	≤ 5	≤ 4		≤ 2	-		

Note) Rated operation and control voltage range, see page 65.

VH type



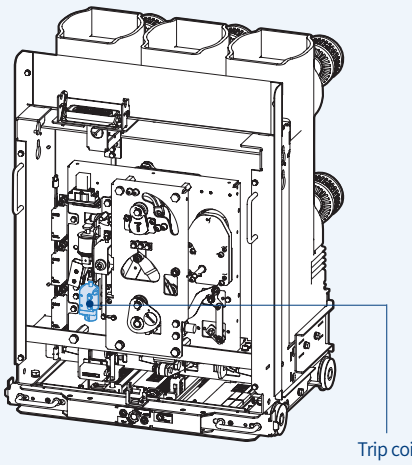

- It is a control device which trips a circuit breaker, when applying voltage continuously or instantaneously over 35ms to the coil control terminals.

Item	VH Type						
Input voltage (Vn)	DC 48V	DC 110V	DC 125V	DC 220V	AC 48V	AC 110V	AC 220V
Rated current (A)	≤ 8	≤ 3	≤ 3.5	≤ 2.5	≤ 8	≤ 3	≤ 2.5

Note) Rated operation and control voltage range, see page 65.

Accessories

Secondary Trip Coil: A1
Secondary Trip Coil with TCM Contact : A2

Installed inside of a breaker as an option

VL type



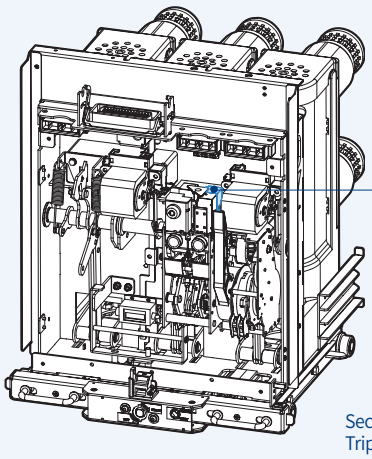

- It is a control device which trips a circuit breaker doubly from the outside. If the trip coil (T) fails, it can trip a circuit breaker safely.
- Trip coil: Install it at existing location.
- Secondary trip coil: Install it on the right side of the trip coil.
- It is not available with UVT coil when installing secondary trip coil.

Item	VL Type							
Input voltage (Vn)	DC 24~30V	DC 48~60V	DC 110V	DC 125V	DC 220V	AC 48V	AC 100~130V	AC 200~250V
Power consumption (inrush, W)	200							
Power consumption (inrush, W)	≤ 5							

VH type



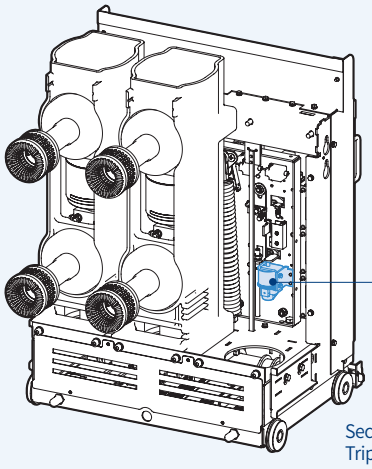

- It is a control device which trips a circuit breaker doubly from the outside. If the trip coil (T) fails, it can trip a circuit breaker safely.
- It is not available with UVT coil when installing secondary trip coil.

Item	VH Type						
Input voltage (Vn)	DC 48V	DC 110V	DC 125V	DC 220V	AC 48V	AC 110V	AC 220V
Rated current (A)	≤ 8	≤ 3	≤ 3.5	≤ 2.5	≤ 8	≤ 3	≤ 2.5

Rated operation and control voltage range

Item		Susol VCB			Remarks
		VL : 7.2kV8/12.5kA	VL : 20/25kA	VH	
Motor	AC	85~110%	85~110%	85~110%	
	DC	75~110%	85~110%	85~110%	
Closing	AC	85~110%	85~110%	85~110%	
	DC	75~125%	85~110%	85~110%	
Trip	AC	60~125%	85~110%	85~110%	
	DC	60~125%	70~110%	70~110%	
Applied standards		IEC62271-100(2012)KSC4611	IEC62271-100(2012)	IEC62271-100(2012)	

Current Trip Coil

Installed inside of a breaker as an option

VL type: T9



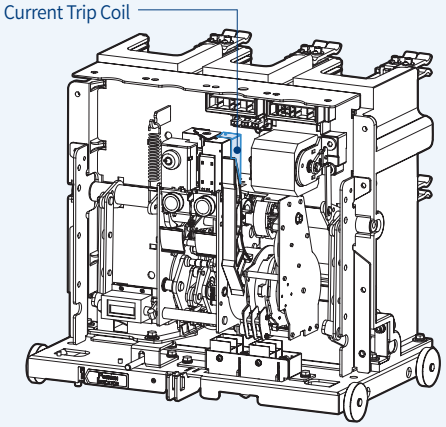

VL type: AV, AW

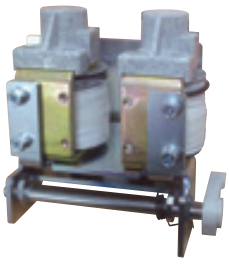

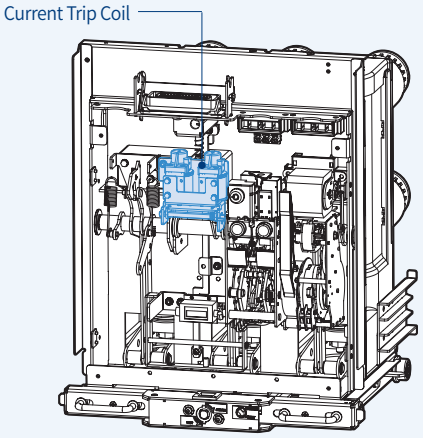

- This trip coil uses the output of the CT as its control power source and is used with over current relay in combination.
  Two current trip coils are supplied.
- Coil burden is 90VA.(T9)
- Coil impedance(Z) is like below
  - 3A: 10Ω or less, Operating current AC 3A (T9)
  - 1A: 160Ω or less, Operating current AC 1A (AV)
  - 5A: 6Ω or less, Operating current is AC 5A (AW)
- CT must be installed at load side.
  If it is installed at bus side there is the danger of malfunction or damage to CT.
- Don't disconnect the control power connector on main power is live condition at service position.
  Otherwise there is the danger of malfunction or damage to CT.

* CT is recommended to use 15VA 5P10 and more.

Accessories

Auxiliary Contact: SA

Installed inside of a breaker as an option

VL type

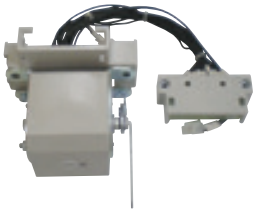

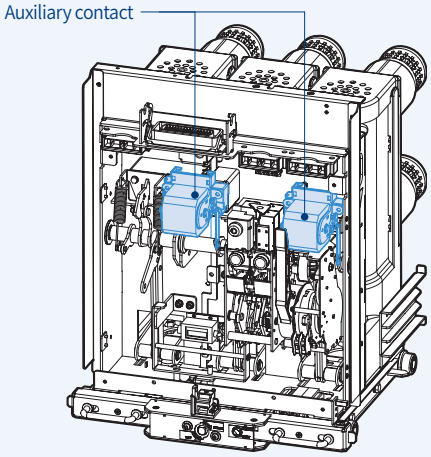

- It is a contact used to monitor ON/OFF status of a breaker from remote place.
- The auxiliary contacts supplied as standard configuration is 4a4b. 10a10b is also available on request.
- For 7.2kV 8/12.5kA VCB standard configuration is 2a2b. 4a4b and 6a6b are optional.

Item	VL: 7.2kV 8/12.5kA	VL: 20/25kA, VH
Standard	2a2b	4a4b
Optional	4a4b, 6a6b	10a10b

VH type

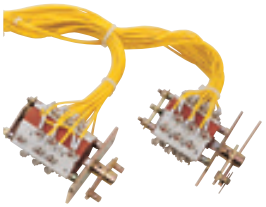

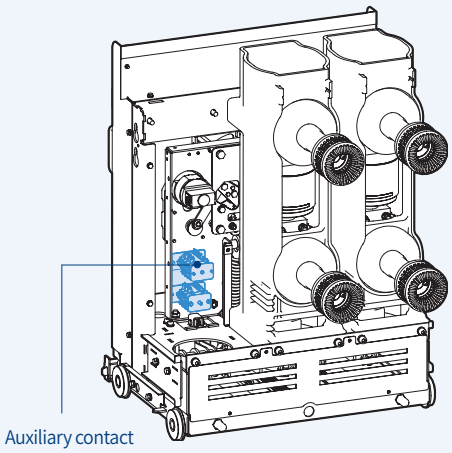

Item			VL/VH Type		
			Resistive load (A)	Inductive load (A)	Remarks
Contact configuration	AC	250V	10	5	For all models
		125V	10	5	
	DC	250V	10	5	
		125V	10	5	
		30V	10	5	

Under Voltage Trip Coil: U

Installed inside of a breaker as an option

VL/VH type



VL type



VH type

VL type

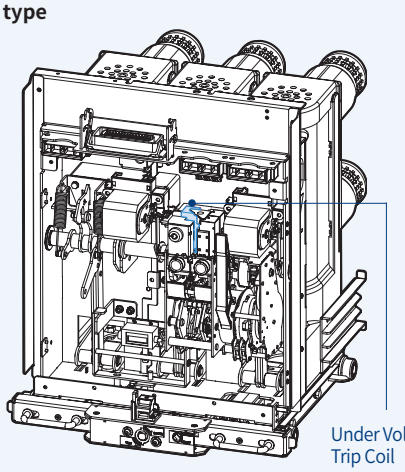

VH type

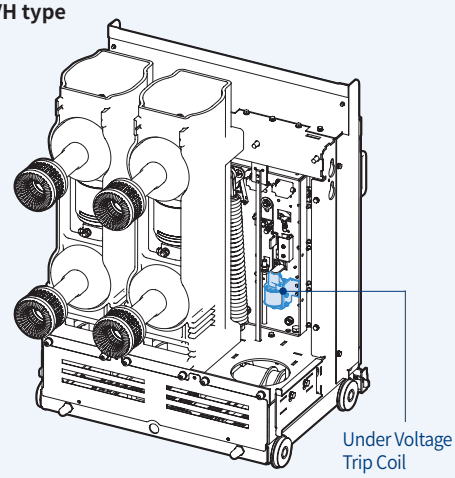

- It is installed inside of a breaker to trip when the main power or control power voltage drops below certain value. Instantaneous type is only available with UVT coil and Time delay type is available by connecting UVT coil and UVT time delay controller.
- The closing of a circuit breaker is impossible mechanically or electrically if control power is not supplied to UVT. To close the circuit breaker, 65~85% of rated voltage should be applied.
- UVT and secondary trip coil will not be selected together.

1. UVT rated voltage and characteristic
   - Operating voltage range: Pick up 0.65~0.85Vn, Drop out 0.4~0.6Vn
   - Operating voltage ranges based on the minimum value of each rated voltage (Vn)

Item	VL Type							
Input voltage (Vn)	DC 24~30V	DC 48~60V	DC 110V	DC 125V	DC 220V	AC 48V	AC 100~130V	AC 200~250V
Power consumption (inrush, W)	200							
Power consumption (steady, W)	≤ 5							

Item	VH Type						
Input voltage (Vn)	DC 48V	DC 110V	DC 125V	DC 220V	AC 48V	AC 110V	AC 220V
Power consumption (inrush, W)	350						
Power consumption (steady, W)	≤ 10						

Accessories

Position Switch: A3, A4, A5

Installed inside of a breaker as an option

VL type
E/F/G Cradle

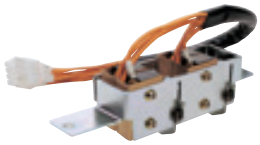

Small VCB (VL)

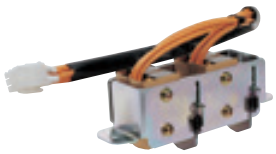

Medium VCB (VL)

VL: 7.2kV 8/12.5kA

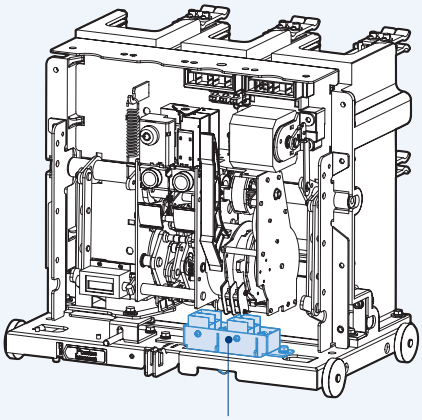

VL: 20/25kA

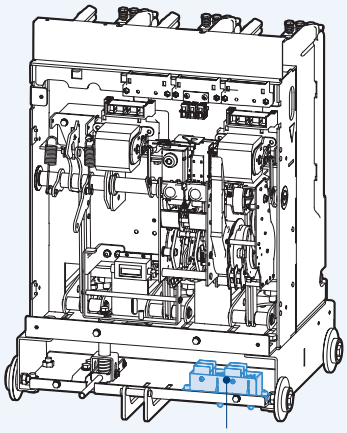

• This switch is used to indicate the breaker position (SERVICE, TEST), and contact configuration is 2a2a or 2a2b.

VL/VH type
H Cradle

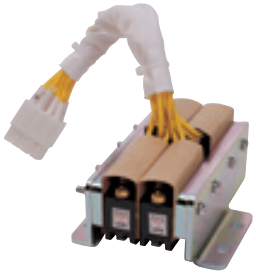

Large model (VH)

VL: 20/25kA

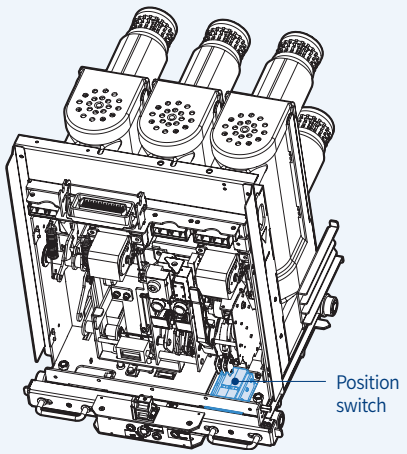

VH

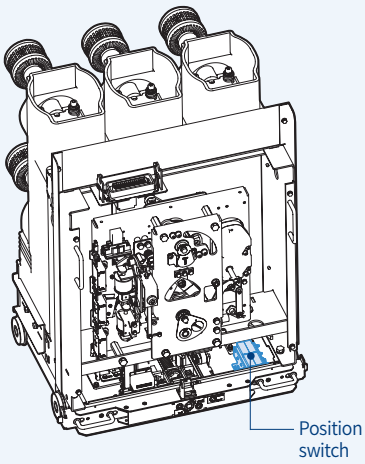

Contact configuration

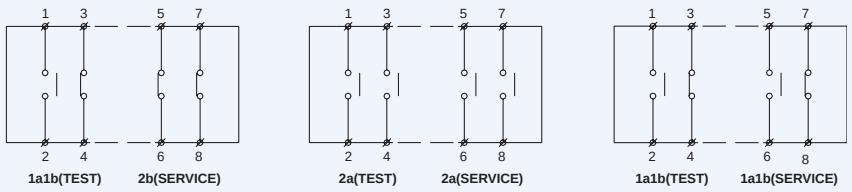

Latch checking switch: A6

Installed inside of a breaker as an option

VH type

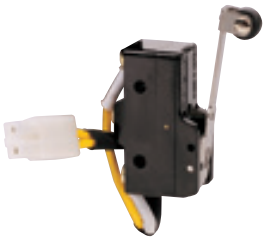

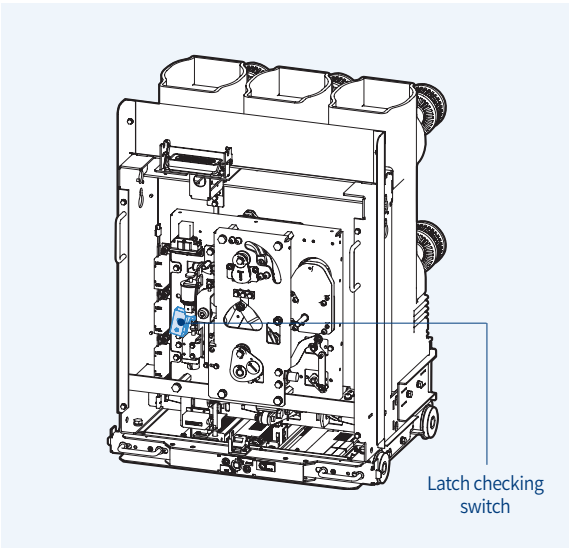

- This switch works in conjunction with the mechanism of the breaker. It checks if the breaker is ready to be closed.
- When the mechanism is OFF and the closing spring is at charged status the switch becomes "ON", which means the mechanism is ready to be closed.
- If the latch is not in a proper position the switch prevents the breaker from closing. In case of VH type it is connected internally in series with the closing coil.

Counter: C

Installed inside of a breaker as standard

VL/VH type





- It displays the total number of ON/OFF operations of a breaker.

Accessories

Keylock: A7, AG

Installed inside of a breaker as an option

VL type



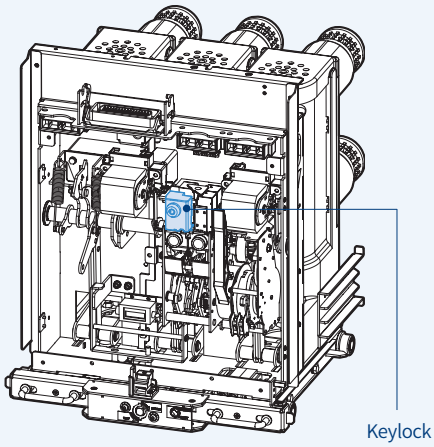

• The key is to unlock the locking device first to close the breaker electrically and mechanically.

* How to operate
- It is not possible to pull out the key in the unlocked position, possible only in locked status.
- Pushing "OFF" switch of a breaker turn the key counter-clockwise to the locked position and pull it out.
- It is not possible to close the breaker electrically and mechanically in the locked position.
- Insert the key and turn clockwise and then the breaker can be closed electrically and mechanically.

VH type



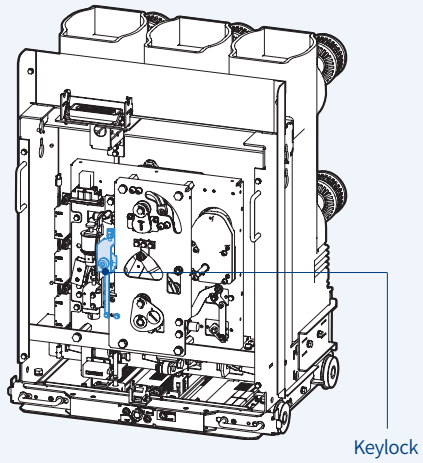

*How to operate
- It is not possible to pull out the key in the unlocked position, possible only in locked status.
- Trip the breaker first and then turn the key counter-clockwise to the locked position and pull it out.
- It is not possible to close the breaker electrically and mechanically in the locked position.

Button Padlock: A8

Installed inside of a breaker as an option

VL type



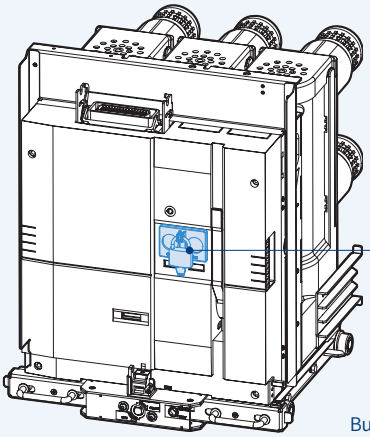

- It is to prevent manual operation of ON/OFF button due to user's wrong handling.
- It is not possible to handle ON/OFF operation under the "Button lock" status.

* Key lock is not supplied.

VH type



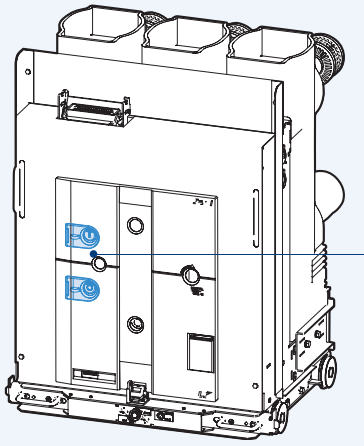

Accessories

Button Cover: A9

Installed inside of a breaker as an option

VL type

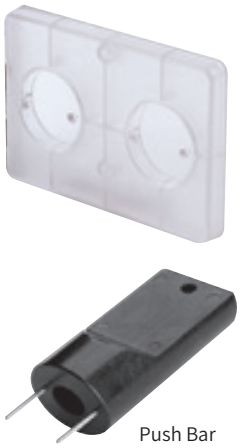

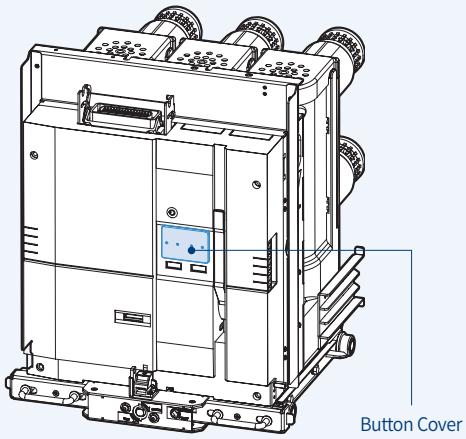

- It is a protection cover to prevent an accident due to unintended operation of ON/OFF button.
- Use the push-bar to operate the ON/OFF button.

VH type

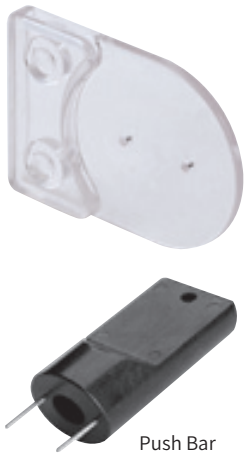

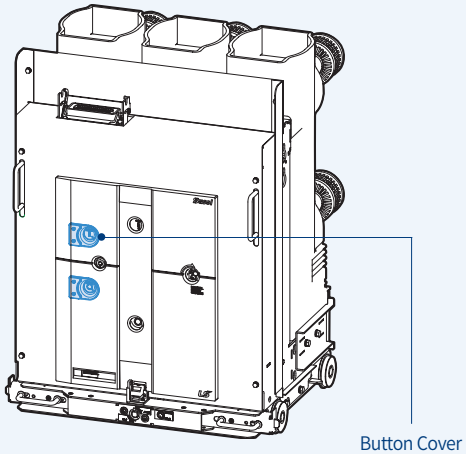

Lead wire

Supplied separately from a breaker as an option

VL/VH type



A type connector



Q type connector

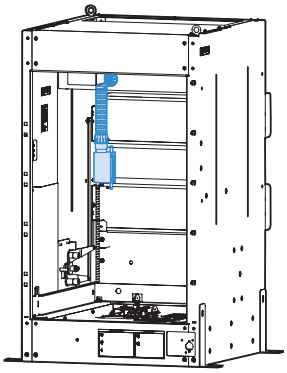

Installation of CB Compartment

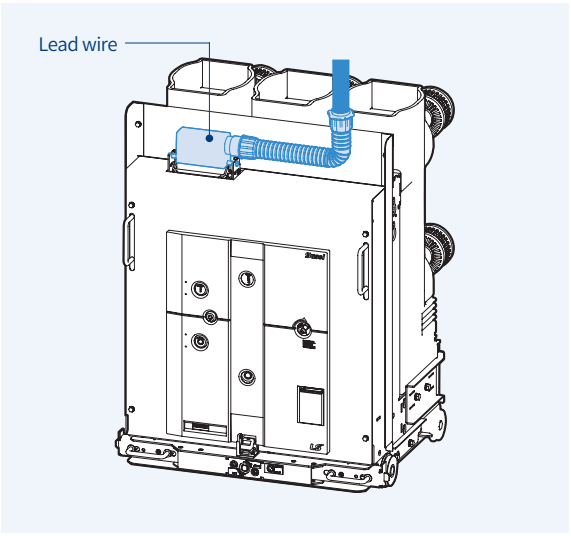

- The wiring for connecting the control circuit of the circuit breaker from the outside is supplied with 2m of wiring.
- A type connector is supplied for P/E/F/G type of VL VCB.
- Q type connector is supplied for P type of VH VCB.
- In case of H type breaker of VL and VH models the Lead wire is installed in the cradle when supplied.

Supply ways of Lead wires by VCB model

VCB model \ Cradle type	P	E	F	G	H
VL	Purchase separately (see page 74				Optional purchase or cradle shipment (optional)
VH	Purchase separately (see page 74				Optional purchase or cradle shipment (optional)

Plug/Terminal for lead wire

Supplied separately from a breaker as an option

VL/VH type

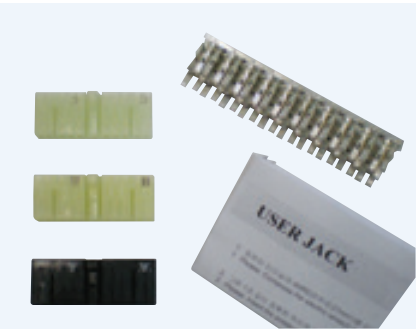

A type connector



Q type connector

- It is connector to connect with the connector installed in the breaker. (supply connectors and terminal only for lead wire)
- Type of connector is depends on the type of connector installed in the breaker- A or Q.

Accessories

Plug interlock: AC

Installed inside of a breaker as an option

VL/VH type
(7.2kV 20/25kA 630A~)

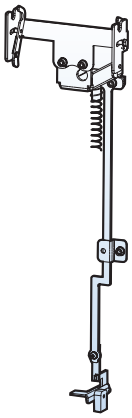

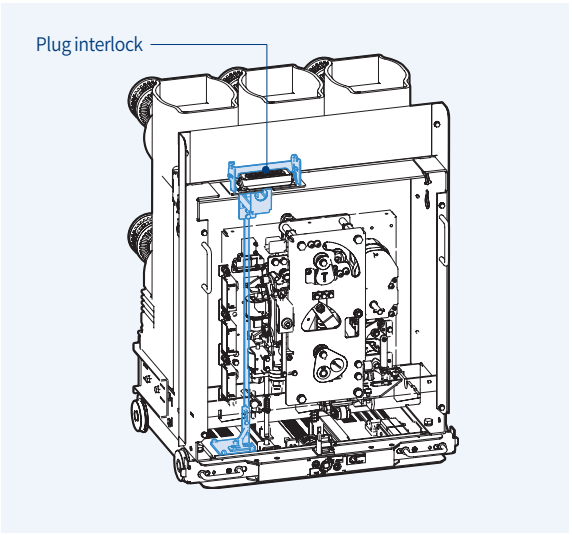

- It checks if the control power connector on the cradle (H type) is connected with the connecting terminal of the breaker before the proceeding of draw-in or out.
- It is not allowed to seperate the control power connector from the breaker in the position of draw-in /out or SERVICE, but TEST position.

Padlock/Door racking interlock: AD

Installed inside of a breaker as an option

VL/VH type
(7.2kV 20/25kA 630A~)



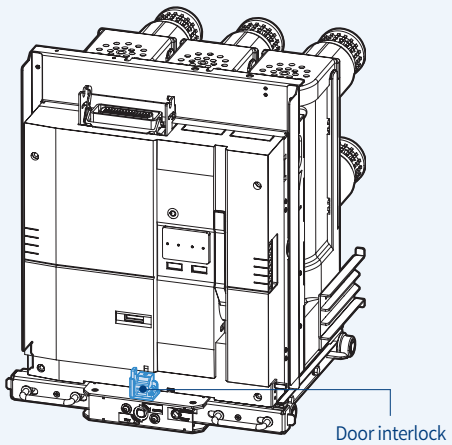

- With this door options for H type cradle draw-in/out is allowed only when the door is closed.
- If draw-in /out is necessary when the door is open, use the operation lever put in the slot of the breaker handle.
  Insert it into the hole in the bottom of door interlock.
- Padlock is also optional, which can lock to prevents the draw-in/out of the breaker in the position of TEST and SERVICE.

MOC drive device: AE

Installed inside of a breaker as an option

VL type (7.2kV 20/25kA 630A~)

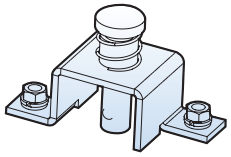

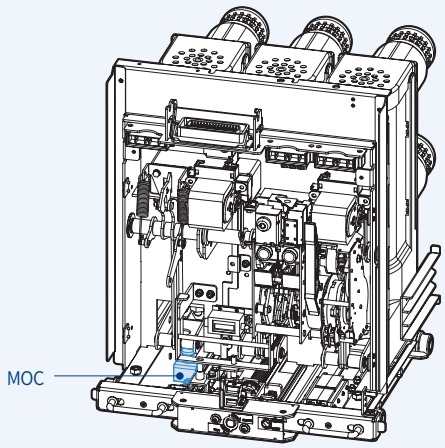

- It must be installed in the breaker to drive the MOC installed in H type cradle.
- MOC, Mechanically operated cell switch is the device to indicates the Closed/Trip status of VCB in 'SERVICE' position only.
- This MOC drive device in the breaker should be installed when MOC in the cradle is used.

VH type

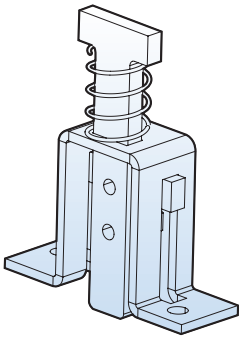

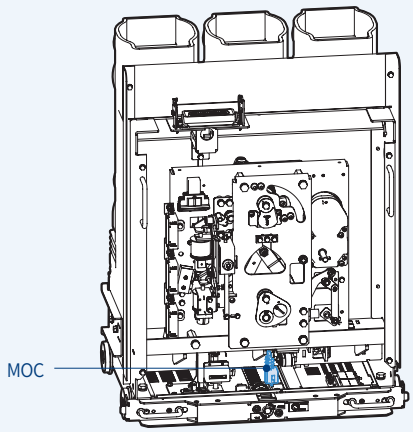

Accessories

Locking magnet: AF

Installed inside of a breaker as an option

VL type



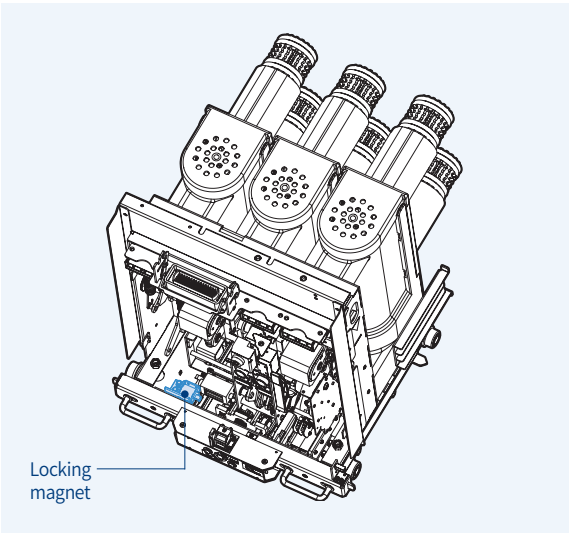

- It allows the drawing-in of the breaker in the TEST position under the condition that the control power connector on the cradle (H type) is connected with the connecting terminal of the breaker and the power is supplied.
- Constant power must be supplied to locking magnet until the draw-in/out operation is completed and operation handle is inserted

* Control power rating is the same as that of a motor.

VH type

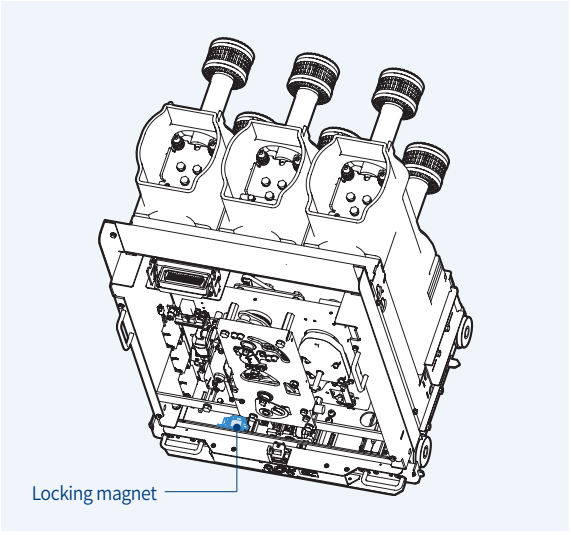

Trip coil monitoring contact

Installed inside of a breaker as standard

VL type

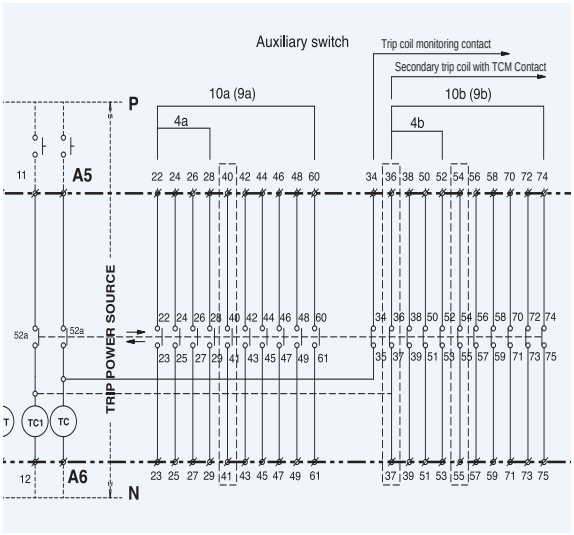

- Device for monitoring the functions of the trip coils.
- To monitor the trip coils connect its terminals with the trip coil monitoring relay as shown on the circuit diagram.
  - If the trip coil is normal: closed-circuit consisting
  - If the trip coil is damaged: open circuit
  1) Terminal A5 and A6 monitor the trip coils(TC) in Closed position of the breaker
  2) Terminal A6 and auxiliary contact terminal 34 monitor the trip coils(TC) in trip position of the breaker
  3) Terminal 11 and 12 monitor the secondary trip coils(TC1) in Closed position of the breaker
  4) Terminal 12 and auxiliary contact terminal 36 monitor the secondary trip coils(TC1) in trip position of the breaker
- Coil Test Unit is opional, which enable monitoring the coils by connecting in parallel with the trip coil operation switch.
- Trip coil monitoring contact is available only when trip coils T1, T2, T3, T4, T5 are selected.

VH type

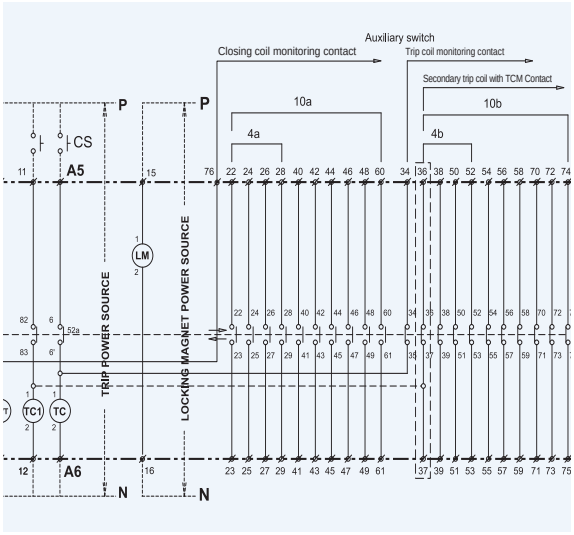

Accessories

Coil Test Unit: CTU

Installed inside of a breaker as an option



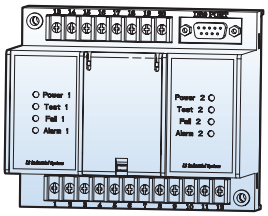

• When no current flows through the coil it gives the test current which does not cause the coil to operate to check whether the coil is disconnected or not.
  - If the test current flows normally: coil normal
  - If the test current does not flow through: coil disconnected

※ **As it is connected in parallel with the control part of the coil the normal operation of the coil is not affected.**
※ **Monitoring of the running coils is not possible.**
※ **One test unit can monitor up to two coils.**

1. Input voltage: AC/DC 75V~264V

2. Contact output
   1) 2×a contacts for Fail indication and 2×a contacts for Alarm
   2) 250Vac/10A Resistive, 30Vdc/10A Resistive

3. Disconnection test cycle is 12 seconds (Test LED blinks)

4. The default operation
   If Fail happens (coil disconnected), Fail LED turns on and the Fail contacts become short state.
   If Fail happens three times in series, Alarm LED turns on and the Alarm contacts become short state.
   In order to clear the Alarm status push up DIP switch on the front and then push down it (Off → On → Off)

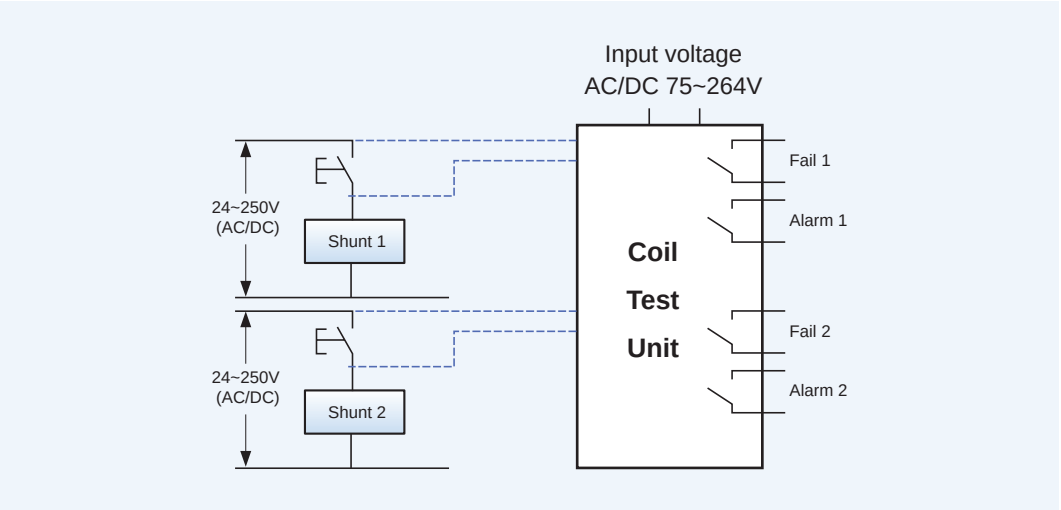

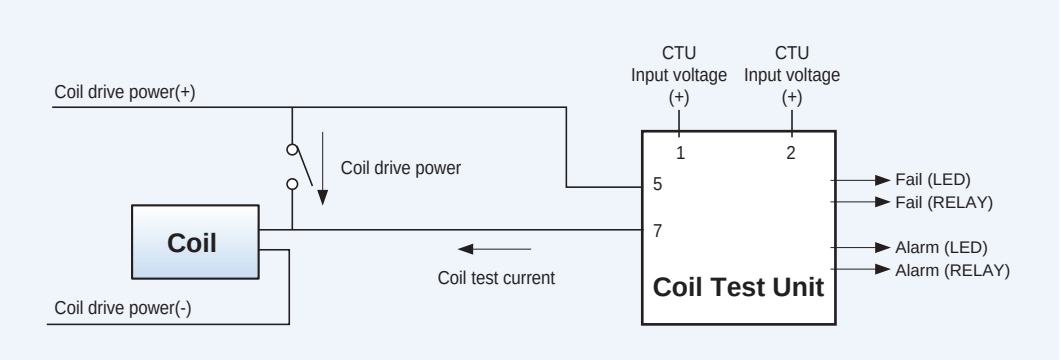

Condenser trip device: CTD

Installed inside of a breaker as an option

Ratings



Ratings	Specification	
Model	CB - T1	CB - T2
Rated input voltage (V)	AC 100/110	AC 200/220
Frequency (Hz)	50/60	50/60
Rated charge voltage (V)	140/155	280/310
Charging time	Within 10sec.	Within 10sec.
Trip possible time	Within 30sec.	Within 30sec.
Range of Input voltage	85%~110%	85%~110%
Condenser capacity (μF)	1,000	560

- It gets a circuit breaker tripped electrically within regular time when control power supply is broken down and is used with Shunt coil, SHT. In case there is no DC power, It can be used as the rectifier which supplies DC power to a circuit breaker by rectifying AC power.
- Tripping within 30 seconds on the power failure is possible. However after that automatic trip circuit must be configured separately in the switchgear.

Terminal arrangement

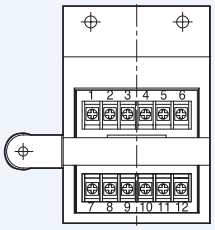

External dimension

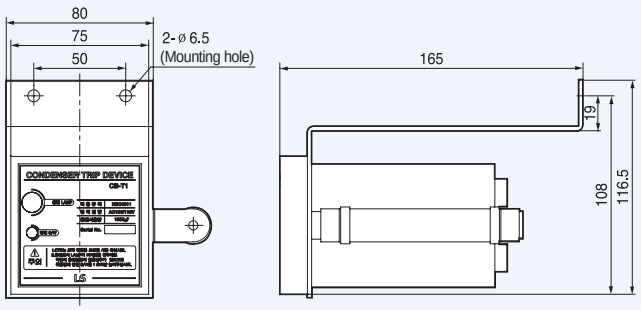

Circuit diagram

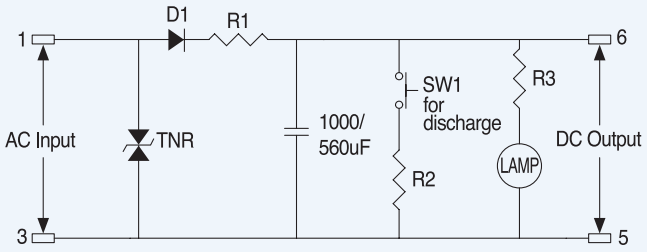

UVT Time delay: UDC

Installed inside of a breaker as an option



- UVT time delay, UDC is to delay the trip signal from UVT.
- Without UDC the breaker will be tripped instantaneously by the trip signal from UVT installed inside of the breaker even in the the momentary power failure.
- UDC can delay the trip time to avoid this unintended instantaneous trip in the event of such power failure.
- It can be installed on the cradle or inside of the switchgear.
- UDC provides output contacts for indication of trip status due to the UVT coil inside of the breaker. b contact is closed at normal state and a contact is closed at trip.

■ Characteristics

Rated voltage (Vn)		Opration voltage range (V)		Consumption (VA or W)		Time delay (ms)
DC (V)	AC (V)	Pick up	Drop out	Inrush	Steady-state	
48~60	48	0.65~0.85 Vn	0.4~0.65 Vn	200	≤ 5	0.5, 1, 1.5, 3
100~130	100~130					
200~250	200~250					

- Operating voltage ranges are based on the minimum value of each rated voltage (Vn)

■ Ratings of output contacts

Rated voltage (V)	Rated current (A), Resistive load	Max. switching voltage (A)	Max. switching current (A)
24V DC	≤ 12	110V DC 250V AC	15
120V AC	≤ 12		
250V AC	≤ 10		

■ Wiring diagram

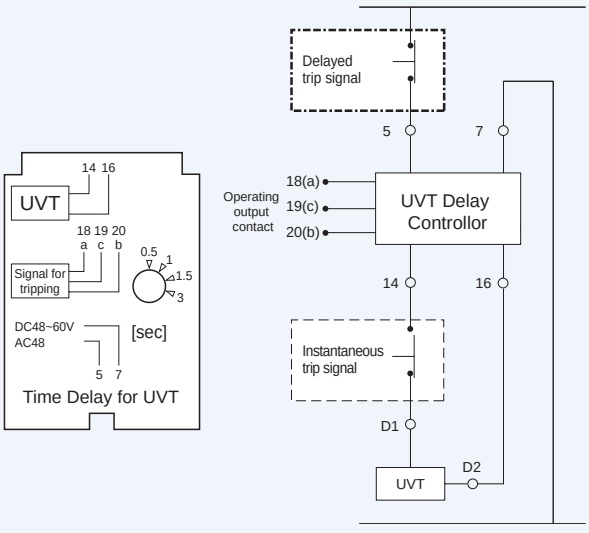

Temperature sensor and monitoring unit: TM

Installed inside of a breaker as an option

VL/VH type (7.2kV 20/25kA 630A~)

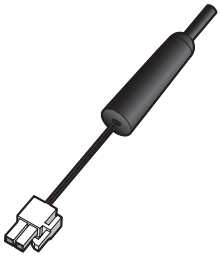

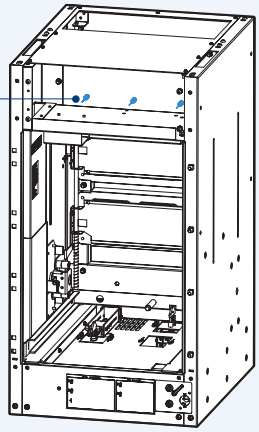

- Temperature Alarm Unit displays the input temperature detected through the temperature sensor installed in H-type cradle.
- Temperature sensor can be installed up to three (R, S, T phase).
- Temperature Alarm Unit converts the temperatures detected from the senser in the cradle and displays the maximum value and can transmit it throug communication.
- If the input temperature is above standard it may cause alarm.
  Temperature Alarm Unit supports Modbus/ RS-485 communication and contact us Profibus-DP communication.



Temperature sensor and monitoring unit

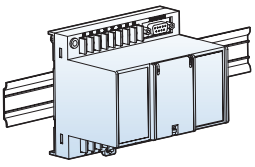

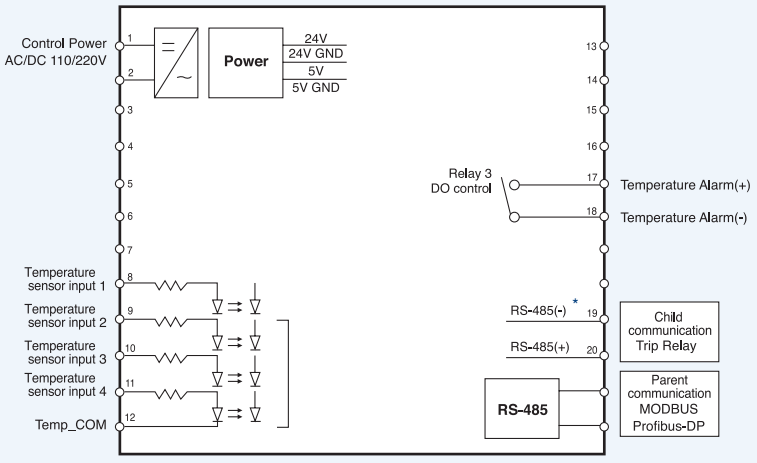

LED temperature display (°C):
10 ~150°C, Warning
Display maximum value
of temperatures

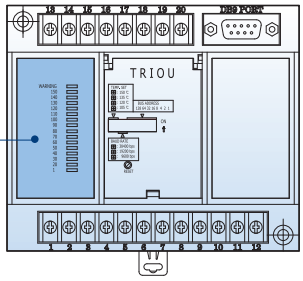

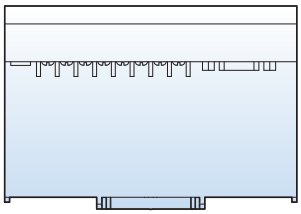

Accessories

Earthing Switch: A1

Built-in a cradle as an option

VL/VH type
(7.2kV 20/25kA 630A~)

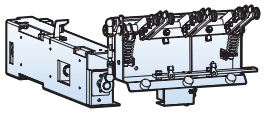

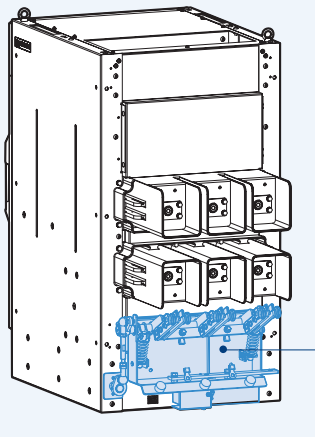

- For the safety during the maintenance of switchgear in the position of TEST/Drawout discharge the charging current in the load side of a VCB with this earthing switch.
  It is available onlt for H type drawout breaker.

* Regarding the operations of earthing switch and related accessories see the instruction manual.
* Applicable Standards: IEC 62271-102

Position switch for Earthing Switch: A2, A4

Built-in a cradle as an option

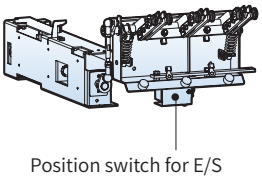

- In case of using earthing switch it can be added to indicate the ON / OFF status of the earthing switch.

** Contact configuration: 2a2b, 6a6b

Circuit diagram

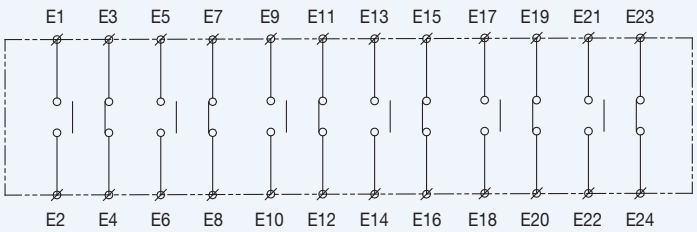

Keylock for Earthing Switch: A5

Built-in a cradle as an option

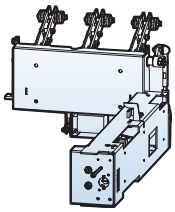



Keylock for earthing switch

- In case of using earthing switch it can be added for two types of interlocking.

  1) Interlock to keep opening

  2) Interlock to keep earthing

Locking magnet for Earthing Switch: A6~AD

Built-in a cradle as an option



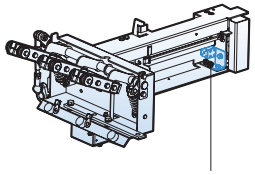

Locking magnet for Earthing Switch

- In case of using earthing switch it can be added to prevent the earthing switch from opening or earthing before it is energized.
- Verify if the locking magnet is energized before opening or earthing the earthing switch.
- Control voltage

  - DC 24V / DC 48V / DC 110V / DC 125V / DC 220V
  - AC 48V / AC 110V / AC 220V

Accessories

Shutter padlock: AE

Built-in a cradle as an option

VL/VH type
(7.2kV 20/25kA 630A~)

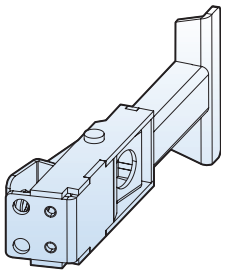

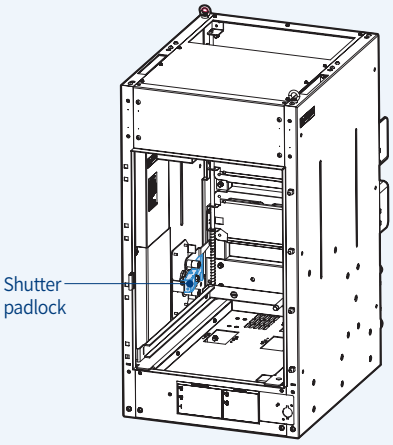

- It is the locking device to lock the primary and secondary shutter in closed state for safety while the breaker is drawn out for maintenance.
- When the breaker is drawn in, the shutter is automatically opened.
- There is a hole for padlock to lock the shutter.
- It can be applied only to H type cradle.

Truck operated cell switch (TOC: AF)

Built-in a cradle as an option

VL/VH type
(7.2kV 20/25kA 630A~)

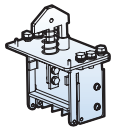

VL type

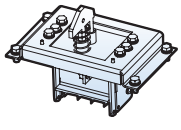

VH Type

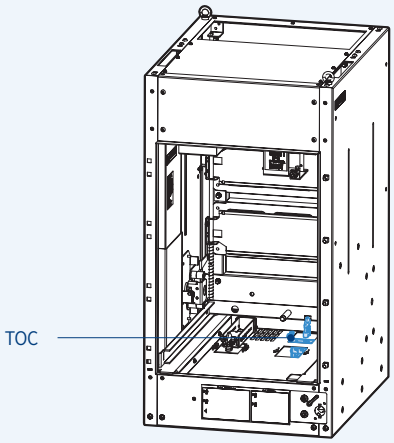

- This auxiliary switch is used to indicate the 'SERVICE' position of VCB. It is installed in the bottom of a H type cradle and operated by the frame of a breaker.
- TOC is consisted of 4 cell switches with changeover contacts as below diagram.

■ Circuit diagram

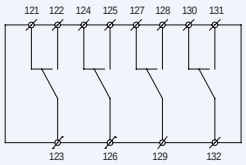

a Contact: 122-123, 125-126, 128-129, 131-132,
b Contact: 121-123, 124-126, 127-129, 130-132

Mechanical Operated Cell Switch (MOC: AG)

Built-in a cradle as an option

VL/VH type (7.2kV 20/25kA 630A~)

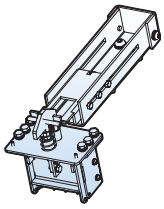

VL type

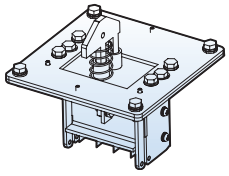

VH Type

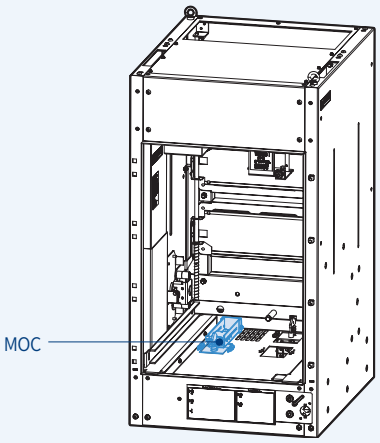

- This auxiliary switch is used to indicate the Close/Trip of VCB. It is operated mechanically at the SERVICE position and installed in the bottom of a H type cradle and operated by the frame of a breaker.
- MOC is consisted of 4 cell switches with changeover contacts as below diagram.

■ Circuit diagram

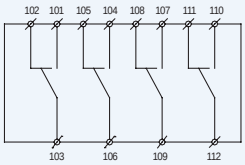

a Contact: 101-103, 104-106, 107-109, 110-112,
b Contact: 102-103, 105-106, 108-109, 111-112

Door: AH

Built-in a cradle as an option

VL/VH type (7.2kV 20/25kA 630A~)



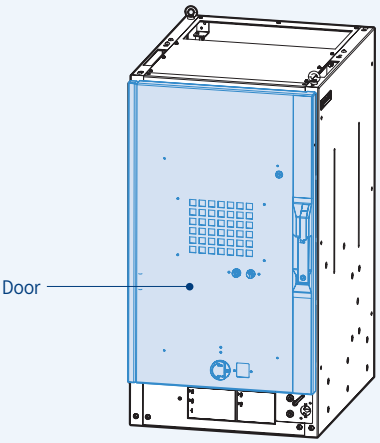

- It is outside door for H type cradle.
- Accessories are available for the door.

Accessories

Door Interlock: AJ

Built-in a cradle as an option

VL/VH type
(7.2kV 20/25kA 630A~)

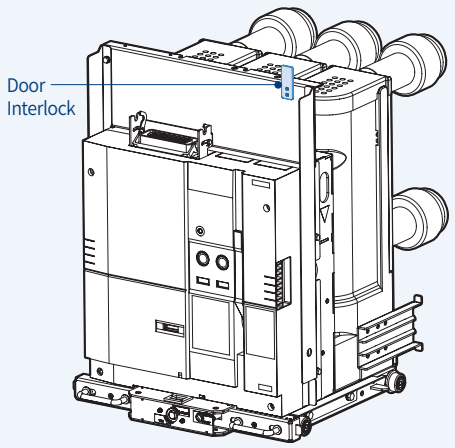

- When the Door is installed to H type cradle, this door interlock prevents opening it at SERVICE position.

Door Emergency Push button: AK

Built-in a cradle as an option

VL/VH type
(7.2kV 20/25kA 630A~)

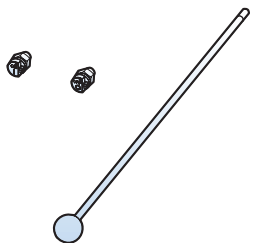

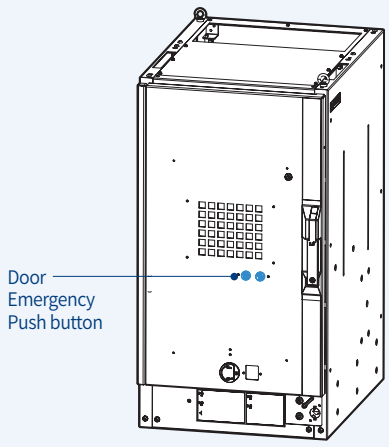

- It is used to enable the Close/Trip of the breaker manually from outside of the door installed to H type cradle during an emergency.
- Push the ON/OFF button by ON/OFF handle supplied seperately.

Temperature Sensor: AC

Built-in a cradle as an option

VL/VH type (7.2kV 20/25kA 630A~)

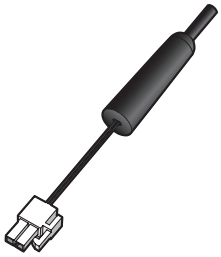

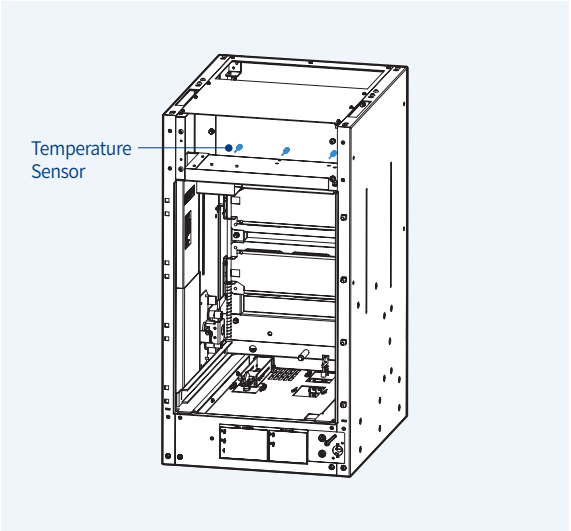

- This sensor is used to detect the temperature in H-type cradle combined with Temperature monitoring unit.
- It can be installed up to three (R, S, T phase).

Racking In/Out handle

Susol VCB offers various kinds of handle suitable for each use of types and models.
The order can be proceeded with the code below and ordering quantity is flexibly adjustable.

Type	Cradle		Racking in/out handle	Charging handle	Operating handle for earthing S/W
VL-06□08, 13	E F G			Not required	-
VL-06□20, 25	E F G			Not required	-
VL-06□20, 25	H K	A		Not required	
		B			
VH-06, 12, 17, 24, 35, 36□		C			
		D			

Racking in/out handle for H, K cradle

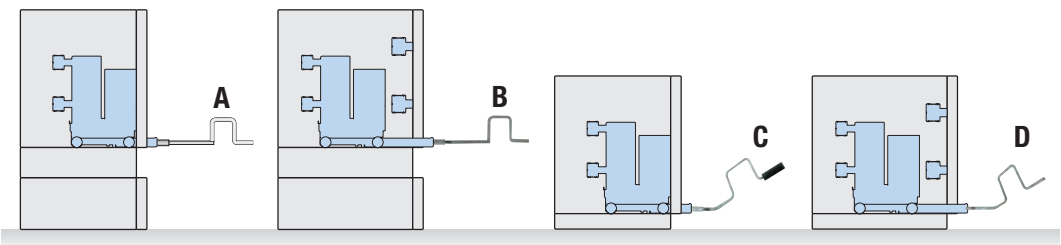

Accessories

Type H Cradle Lead Wire: AM~A0

Built-in a cradle as an option

VL/VH type
(7.2kV 20/25kA 630A~)

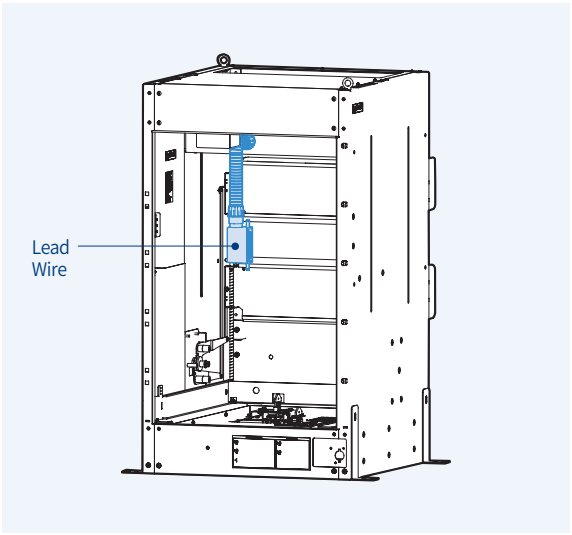

- In case of H type breaker of VL and VH models the Lead wire is installed in the cradle when supplied.
- 4a4b or 10a10b contacts are selectable according to the auxiliary contact of the breaker. Flame retardant cable is used for 4a4b.

Door Padlock

Built-in a cradle as an option

VL/VH type
(7.2kV 20/25kA 630A~)

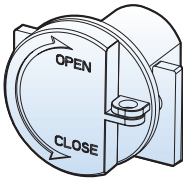

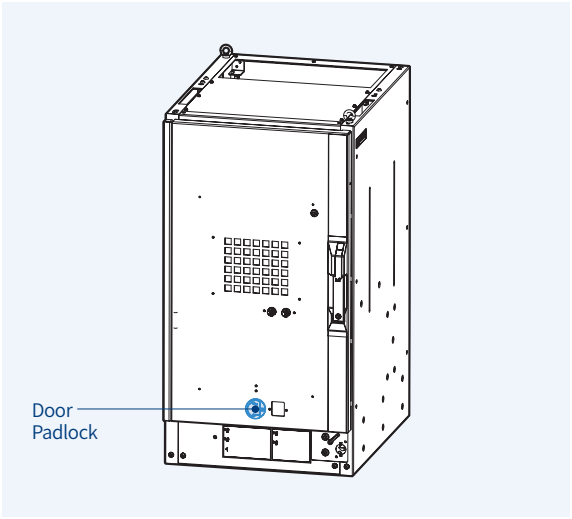

- It is supplied with a door for H type cradle as standard.
- It can be locked by seperate padlock to prevent entering the maunal handle.

Auxiliary guide frame





- Auxiliary guide frame is provided in order to move safely 36kV breaker into the switchgear.
- It can be used in combination with the hand pallet which meets the requirement shown below.

Applicable hand pallet

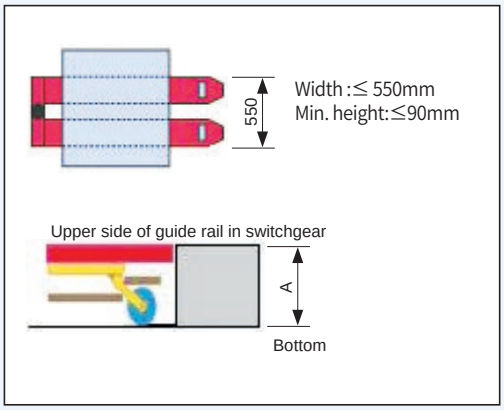

<Fig 1>

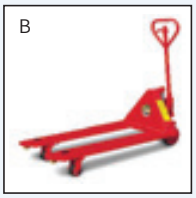



If dimension A in Fig. 1 is less than 120mm B type pallet can be used.
In case of more than 120mm C type must be applied.

Control circuit diagram - VL type

VL-06

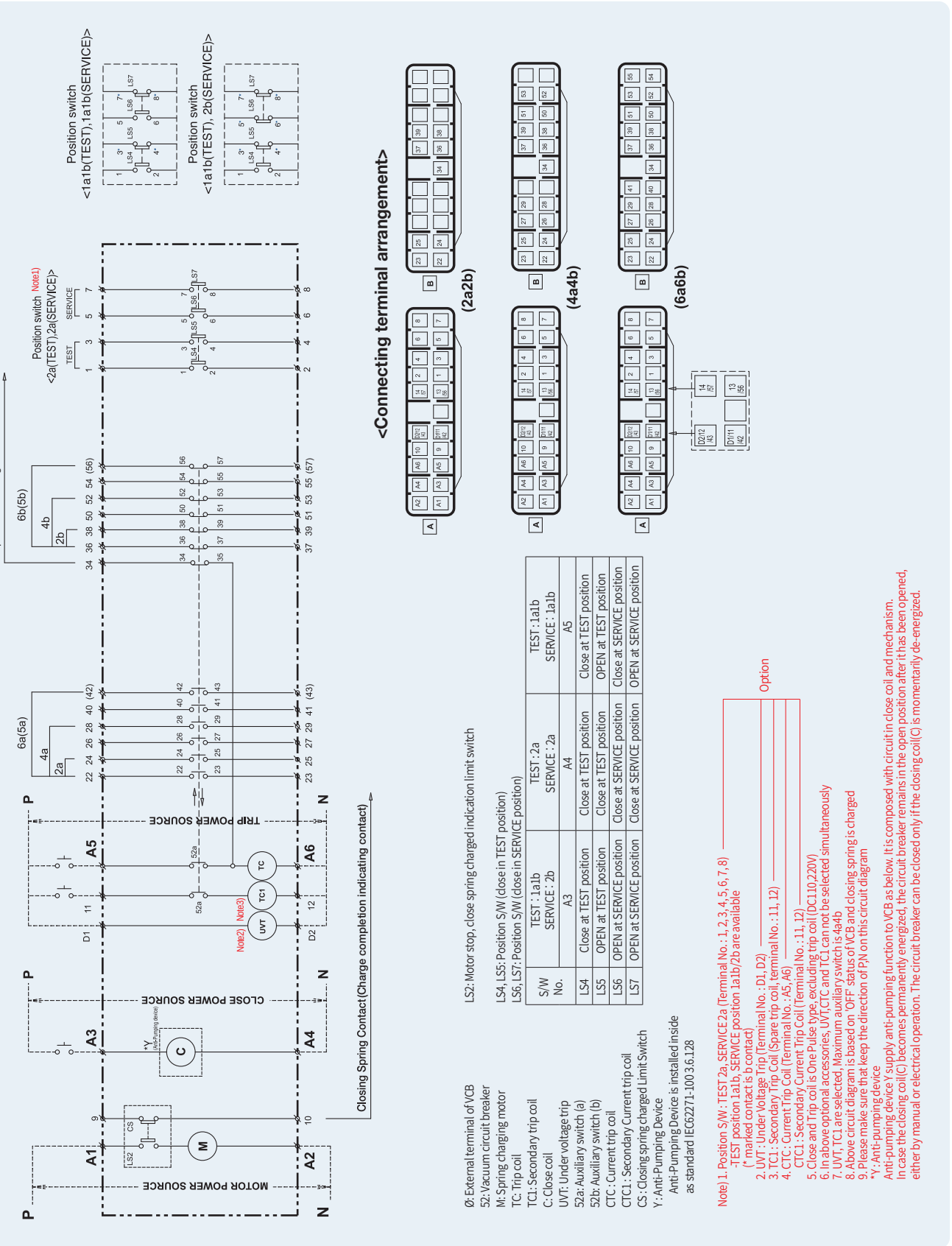

Ø: External terminal of VCB
52: Vacuum circuit breaker
M: Spring charging motor
TC: Trip coil
TC1: Secondary trip coil
C: Close coil
UVT: Under voltage trip
52a: Auxiliary switch (a)
52b: Auxiliary switch (b)
CTC : Current trip coil
CTC1 : Secondary Current trip coil
CS : Closing spring charged Limit Switch
Y : Anti-Pumping Device
Anti-Pumping Device is installed inside as standard IEC62271-100 3.6.128

LS2: Motor stop, close spring charged indication limit switch

LS4, LS5: Position S/W (close in TEST position)
LS6, LS7: Position S/W (close in SERVICE position)

S/W No.	TEST : 1a1b SERVICE : 2b A3	TEST : 2a SERVICE : 2a A4	TEST : 1a1b SERVICE : 1a1b A5
LS4	Close at TEST position	Close at TEST position	Close at TEST position
LS5	OPEN at TEST position	Close at TEST position	OPEN at TEST position
LS6	OPEN at SERVICE position	Close at SERVICE position	Close at SERVICE position
LS7	OPEN at SERVICE position	Close at SERVICE position	OPEN at SERVICE position

Note) 1. Position S/W : TEST 2a, SERVICE 2a (Terminal No. : 1, 2, 3, 4, 5, 6, 7, 8)
-TEST position 1a1b, SERVICE position 1a1b/2b are available
(* marked contact is b contact)
2. UVT : Under Voltage Trip (Terminal No. : D1, D2)
3. TC1 : Secondary Trip Coil (Spare trip coil, terminal No. : 11, 12)
4. CTC : Current Trip Coil (Terminal No. : A5, A6)
CTC1 : Secondary Current Trip Coil (Terminal No. : 11, 12)
5. Close and Trip coil is One Pulse type, excluding trip coil (DC110,220V)
6. In above optional accessories, UVT, CTC and TC1 can not be selected simultaneously
7. UVT, TC1 are selected, Maximum auxiliary switch is 4a4b
8. Above circuit diagram is based on 'OFF' status of VCB and closing spring is charged
9. Please make sure that keep the direction of P,N on this circuit diagram
*Y : Anti-pumping device
Anti-pumping device Y supply anti-pumping function to VCB as below. It is composed with circuit in close coil and mechanism.
In case the closing coil(C) becomes permanently energized, the circuit breaker remains in the open position after it has been opened, either by manual or electrical operation. The circuit breaker can be closed only if the closing coil(C) is momentarily de-energized.

Option

VL-06/12/17/20/25/36

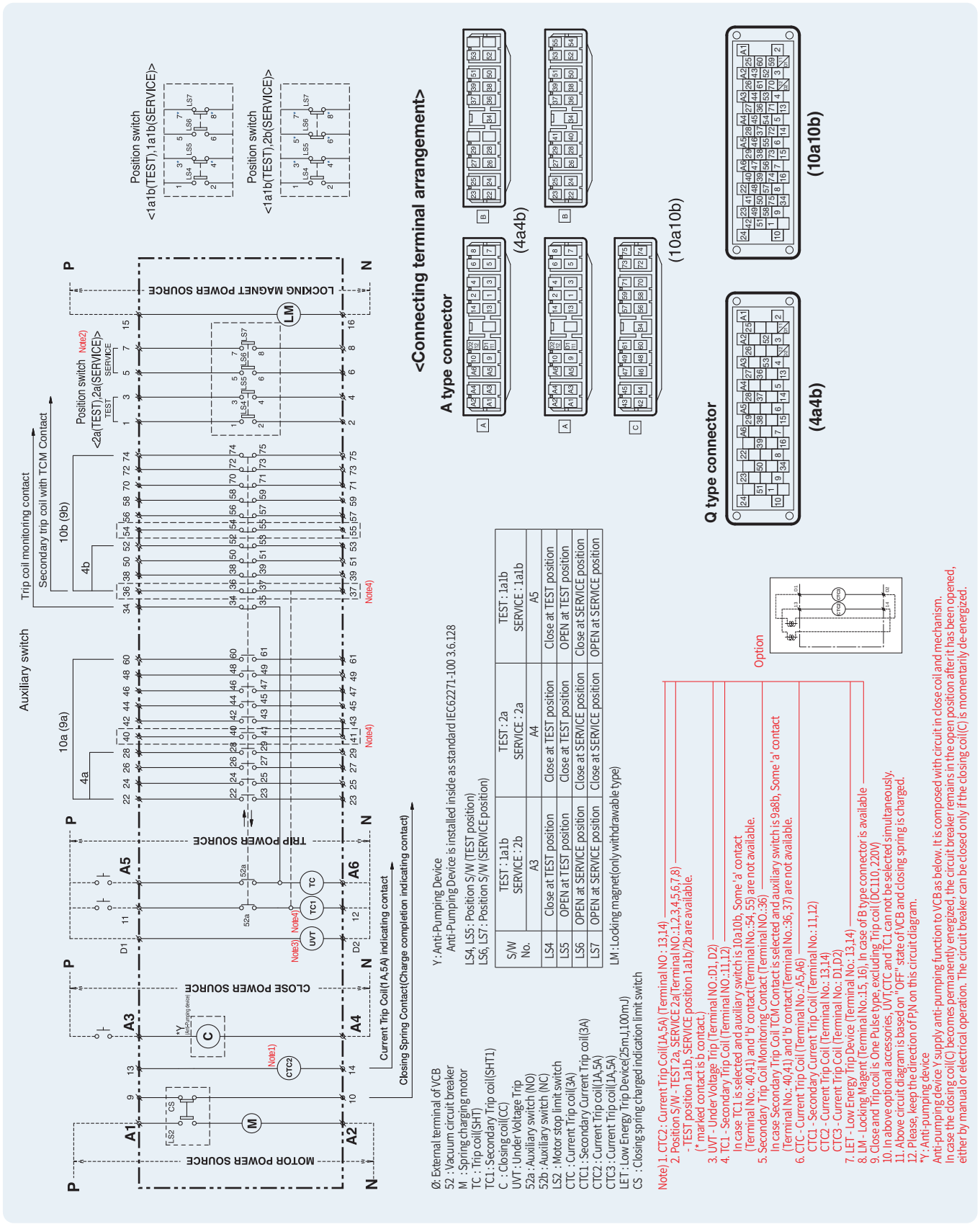

Ø: External terminal of VCB
52 : Vacuum circuit breaker
M : Spring charging motor
TC : Trip coil(SHT)
TC1: Secondary Trip coil(SHT1)
C : Closing coil(CC)
UVT : Under Voltage Trip
52a : Auxiliary switch (NO)
52b : Auxiliary switch (NC)
LS2 : Motor stop limit switch
CTC : Current Trip coil(3A)
CTC1 : Secondary Current Trip coil(3A)
CTC2 : Current Trip coil(1A,5A)
CTC3 : Current Trip coil(1A,5A)
LET : Low Energy Trip Device(25mJ,100mJ)
CS : Closing spring charged indication limit switch

Y : Anti-Pumping Device
Anti-Pumping Device is installed inside as standard IEC62271-100 3.6.128

LS4, LS5 : Position S/W (TEST position)
LS6, LS7 : Position S/W (SERVICE position)

S/W No.	TEST : 1a1b SERVICE : 2b	TEST : 2a SERVICE : 2a	TEST : 1a1b SERVICE : 1a1b
	A3	A4	A5
LS4	Close at TEST position	Close at TEST position	Close at TEST position
LS5	OPEN at TEST position	Close at TEST position	OPEN at TEST position
LS6	OPEN at SERVICE position	Close at SERVICE position	Close at SERVICE position
LS7	OPEN at SERVICE position	Close at SERVICE position	OPEN at SERVICE position

LM : Locking magnet(only withdrawable type)

Note)
1. CTC2 : Current Trip Coil(1A,5A) (Terminal NO : 13,14)
2. Position S/W - TEST 2a, SERVICE 2a(Terminal NO. : 1,2,3,4,5,6,7,8)
   - TEST position 1a1b, SERVICE position 1a1b/2b are available.
   (* marked contact is b contact.)
3. UVT - Under Voltage Trip (Terminal NO.:D1, D2)
4. TC1 - Secondary Trip Coil (Terminal NO.:11,12)
   In case TC1 is selected and auxiliary switch is 10a10b, Some 'a' contact (Terminal No.: 40,41) and 'b' contact(Terminal No.: 54, 55) are not available.
5. Secondary Trip Coil Monitoring Contact (Terminal NO.:36)
   In case Secondary Trip Coil TCM Contact is selected and auxiliary switch is 9a8b, Some 'a' contact (Terminal No.: 40,41) and 'b' contact(Terminal No.: 36, 37) are not available.
6. CTC - Current Trip Coil (Terminal No. : A5,A6)
   CTC1 - Secondary Current Trip Coil (Terminal No.: 11,12)
   CTC2 - Current Trip Coil (Terminal No.: 13,14)
   CTC3 - Current Trip Coil (Terminal No.: D1,D2)
7. LET - Low Energy Trip Device (Terminal No. : 13,14)
8. LM - Locking Magent (Terminal No. : 15, 16), In case of B type connector is available
9. Close and Trip coil is One Pulse type, excluding Trip coil (DC110, 220V)
10. In above optional accessories, UVT,CTC and TC1 can not be selected simultaneously.
11. Above circuit diagram is based on "OFF" state of VCB and closing spring is charged.
12. Please, keep the direction of P,N on this circuit diagram.

*Y : Anti-pumping device
Anti-pumping device Y supply anti-pumping function to VCB as below. It is composed with circuit in close coil and mechanism.
In case the closing coil(C) becomes permanently energized, the circuit breaker remains in the open position after it has been opened, either by manual or electrical operation. The circuit breaker can be closed only if the closing coil(C) is momentarily de-energized.

Control circuit diagram - VH type

VH-06/12/17/20/25/36

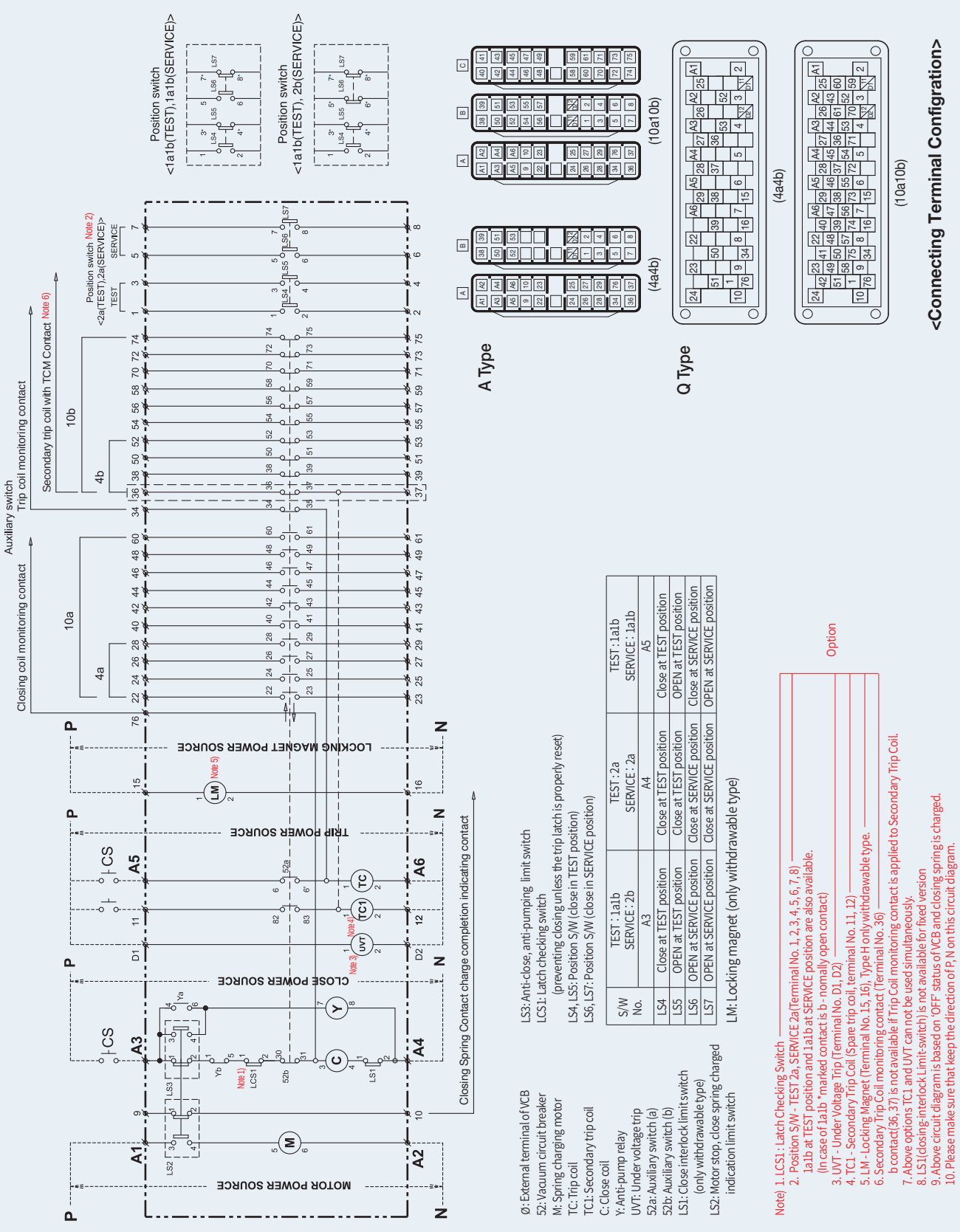

Ø: External terminal of VCB
52: Vacuum circuit breaker
M: Spring charging motor
TC: Trip coil
TC1: Secondary trip coil
C: Close coil
Y: Anti-pump relay
UVT: Under voltage trip
52a: Auxiliary switch (a)
52b: Auxiliary switch (b)
LS1: Close interlock limit switch (only withdrawable type)
LS2: Motor stop, close spring charged indication limit switch
LS3: Anti-close, anti-pumping limit switch
LCS1: Latch checking switch (preventing closing unless the trip latch is properly reset)
LS4, LS5: Position S/W (close in TEST position)
LS6, LS7: Position S/W (close in SERVICE position)

S/W No.	TEST : 1a1b SERVICE : 2b A3	TEST :2a SERVICE : 2a A4	TEST : 1a1b SERVICE : 1a1b A5
LS4	Close at TEST position	Close at TEST position	Close at TEST position
LS5	OPEN at TEST position	Close at TEST position	OPEN at TEST position
LS6	OPEN at SERVICE position	Close at SERVICE position	Close at SERVICE position
LS7	OPEN at SERVICE position	Close at SERVICE position	OPEN at SERVICE position

LM: Locking magnet (only withdrawable type)

Note) 1. LCS1 : Latch Checking Switch
2. Position S/W - TEST 2a, SERVICE 2a(Terminal No. 1, 2, 3, 4, 5, 6, 7, 8)
1a1b at TEST position and 1a1b at SERVICE position are also available.
(In case of 1a1b *marked contact is b - nomally open contact)
3. UVT - Under Voltage Trip (Terminal No. D1, D2)
4. TC1 - Secondary Trip Coil (Spare trip coil, terminal No. 11, 12)
5. LM - Locking Magnet (Terminal No.15, 16), Type H only withdrawable type.
6. Secondary Trip Coil monitoring contact (Terminal No. 36)
b contact(36, 37) is not available if Trip Coil monitoring contact is applied to Secondary Trip Coil.
7. Above options TC1 and UVT can not be used simultaneously.
8. LS1(closing-interlock Limit-switch) is not available for fixed version
9. Above circuit diagram is based on 'OFF' status of VCB and closing spring is charged.
10. Please make sure that keep the direction of P, N on this circuit diagram.

Option

Compartment

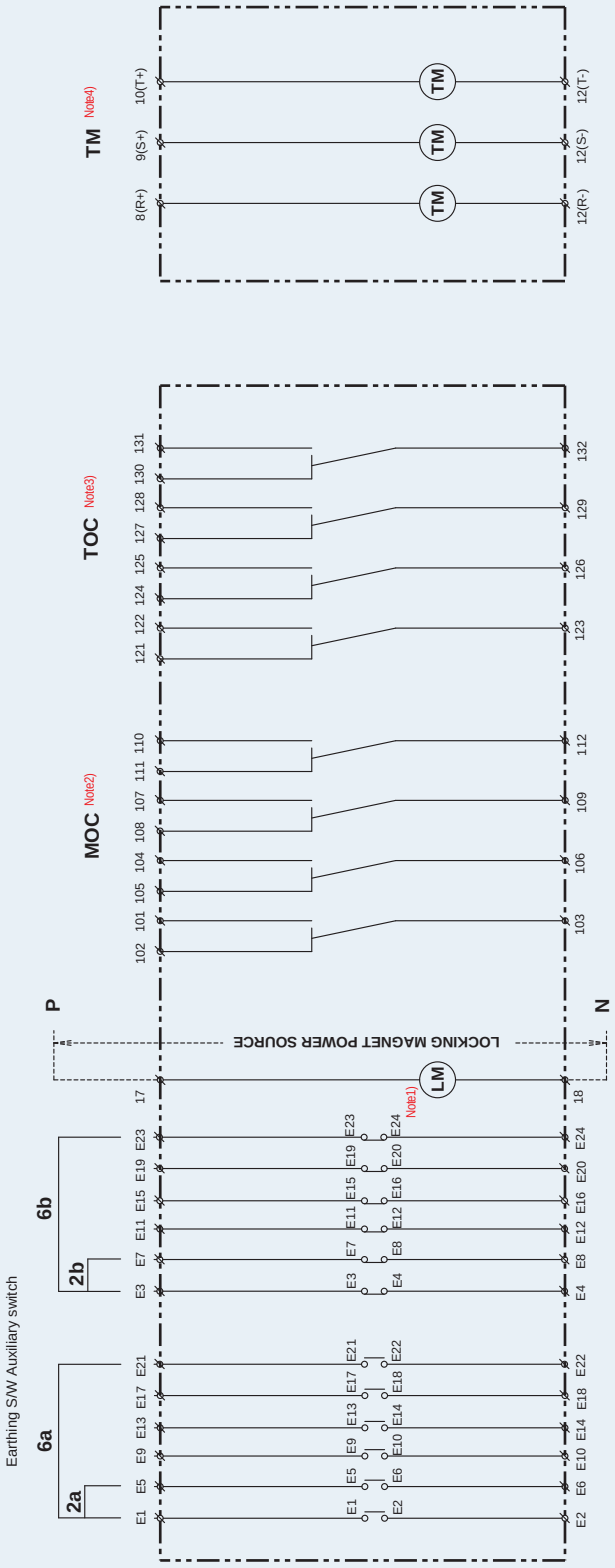

Ø : External terminals for auxiliary contacts and locking magnet
LM : Locking magnet for earthing swtich
MOC : Mechanism operated cell switch (for H type cradle)
TOC : Truck operated cell switch (for H type cradle)
TM : Temperature alarm (for H type cradle)

Note) 1. LM - If it is energized with the rated power the earthing switch can be closed or opened (for H type cradle)
2. MOC - This auxiliary switch is used to indicate the Close/Open of VCB (for H type cradle)
It is composed of 4 cell switches with 4 changeover contacts.
3. TOC - This auxiliary switch is used to indicate the 'SERVICE' position of VCB (for H type cradle)
It is composed of 4 cell switches with 4 changeover contacts.
4. TM - Temperature Alarm Unit displays the input temperature detected through the temperature sensor installed in H-type cradle. Temperature sensor can be installed in each phase and can be connected with the temperature module.
5. Please make sure that keep the direction of P, N on this circuit diagram.

Option

* Above circuit diagram is based on the status that the earthing S/W is Open and the breaker is at Test or between Test and Service position. MOC indicates the Open of the breaker. If the breaker is Closed from Service, the contacts configuration is displayed on the contrary.

Dimensions - VL type (VL-06)

7.2kV, 8/12.5kA, 400/630A

Fixed

Type
VL-06P08A04
VL-06P13A06

■ P type, phase distance 130mm

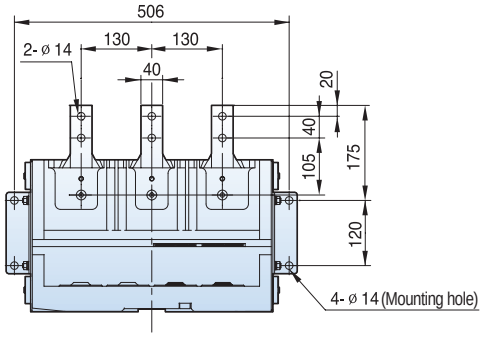

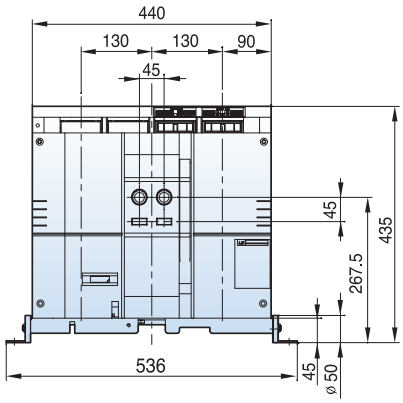

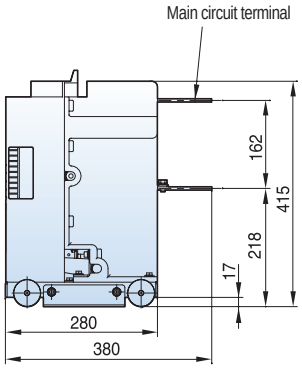

Withdrawable

Type
VL-06E08A04
VL-06E13A06
VL-06F08A04
VL-06F13A06
VL-06G08A04
VL-06G13A06

■ Standard breaker E/F/G type, phase distance 130mm

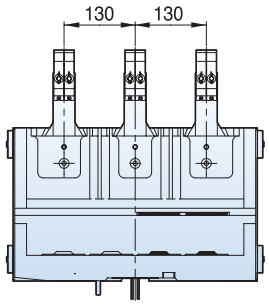

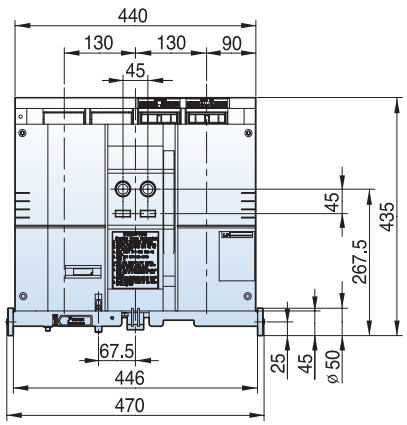

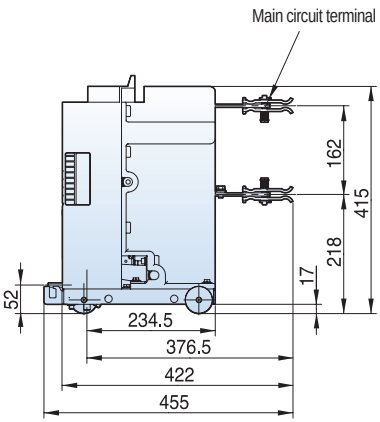

7.2kV, 8/12.5kA, 400/630A

Withdrawable

Type
VL-06E08B04
VL-06E13B06
VL-06F08B04
VL-06F13B06
VL-06G08B04
VL-06G13B06

■ Compatible with existing breaker E/F/G type, phase distance 130mm

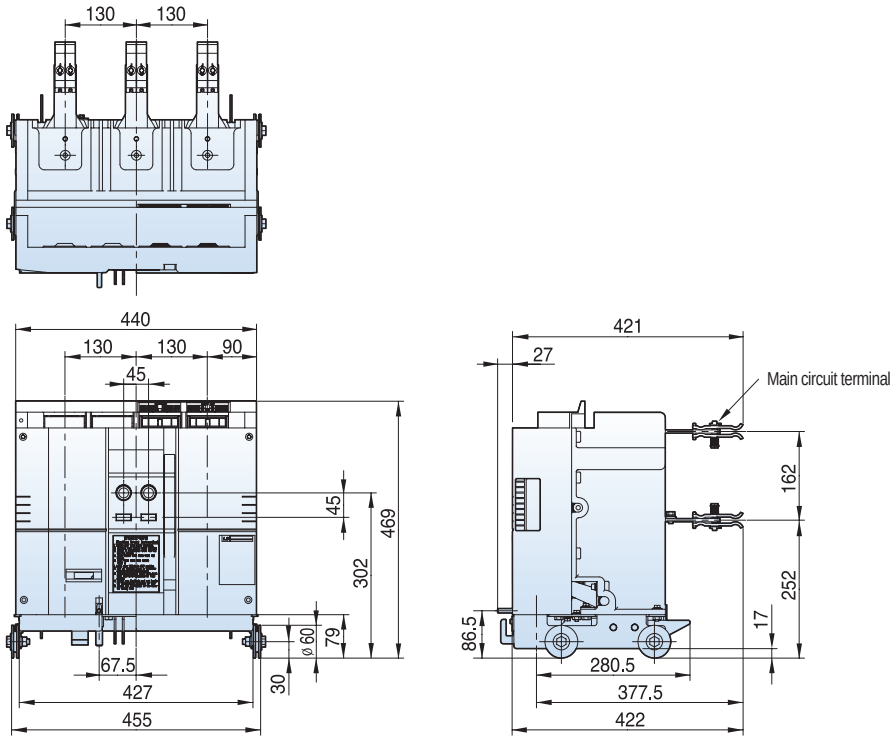

Withdrawable

Type
VCL-06E08A04
VCL-06E13A06

■ E type cradle, phase distance 130mm

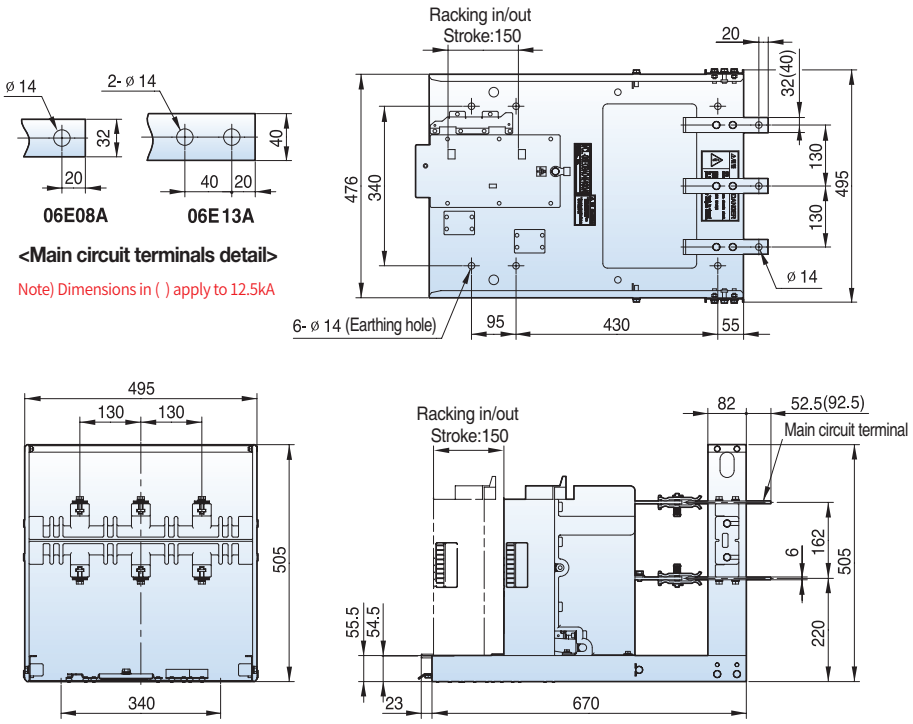

Dimensions - VL type (VL-06/12/17)

7.2kV, 8/12.5kA, 400/630A

Withdrawable

Type
VCL-06F08A04
VCL-06F13A06

■ F type cradle, phase distance 130mm

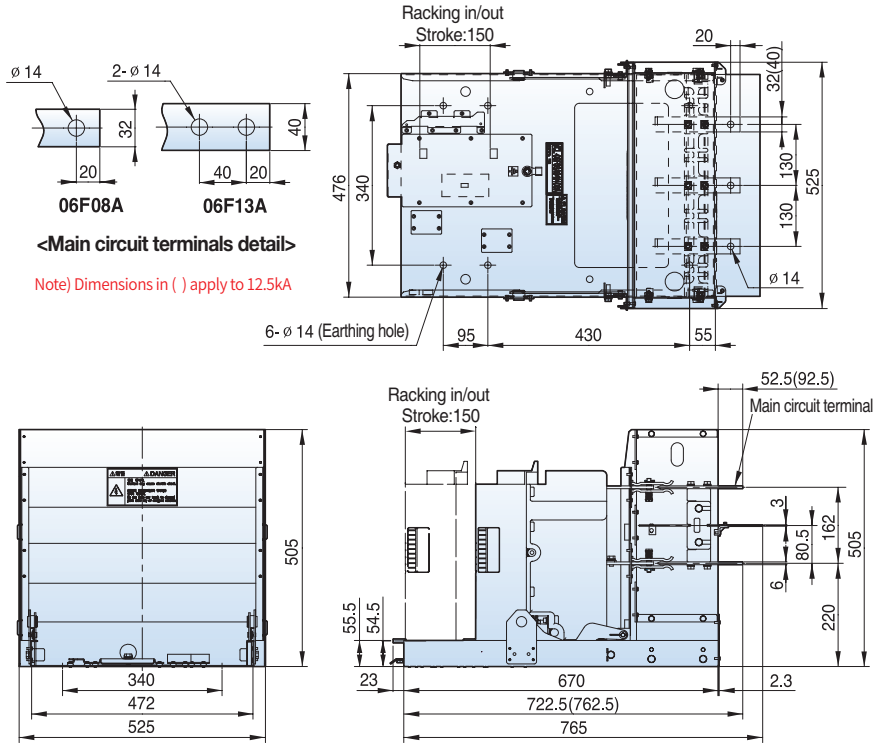

Withdrawable

Type
VCL-06G08A04
VCL-06G13A06

■ G type cradle, phase distance 130mm

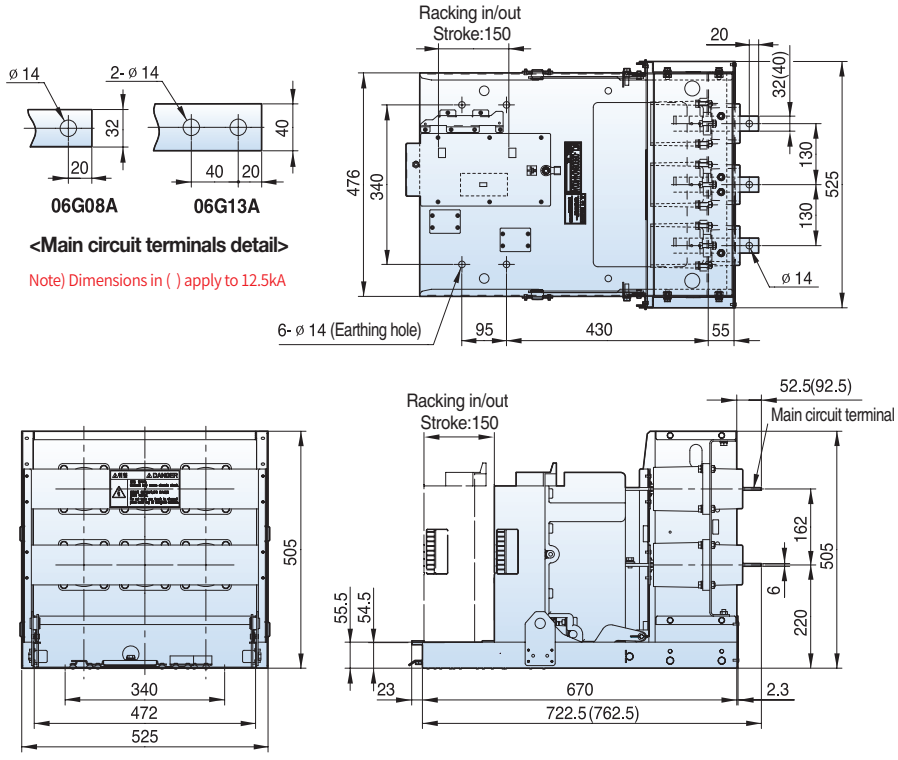

7.2kV, 20/25kA, 630/1250A

Fixed

Type
VL-06P20A06
VL-06P20A13
VL-06P25A06
VL-06P25A13

■ P type, phase distance 150mm

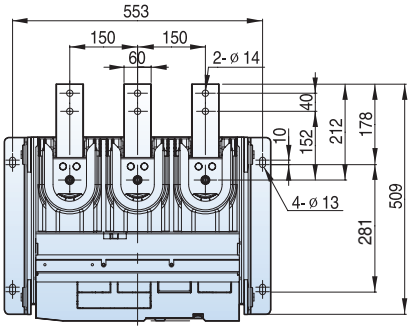

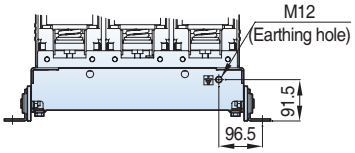

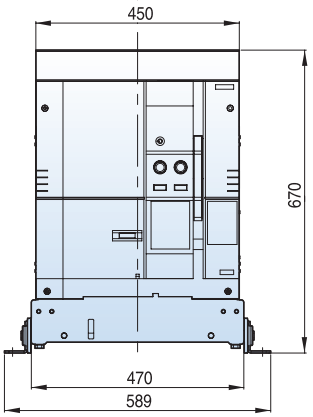

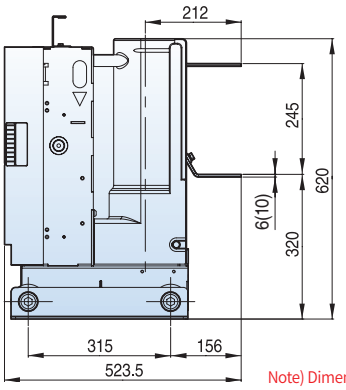

Note) Dimensions in ( ) apply to 1250A

Withdrawable

Type
VL-06E20A06
VL-06E20A13
VL-06E25A06
VL-06E25A13

■ E type unit, phase distance 150mm

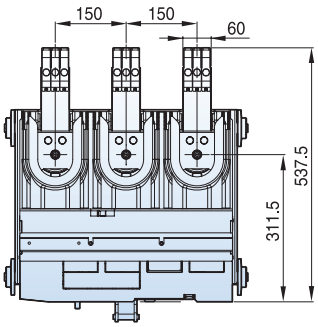

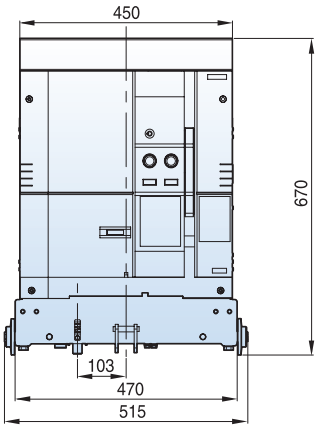

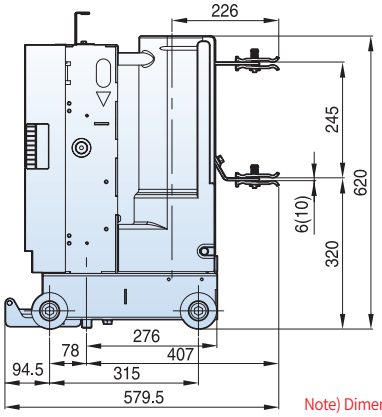

Note) Dimensions in ( ) apply to 1250A

Dimensions - VL type (VL-06/12/17)

7.2kV, 20/25kA, 630/1250A

Withdrawable

Type
VL-06F20A06
VL-06F20A13
VL-06F25A06
VL-06F25A13

■ F type unit, phase distance 150mm

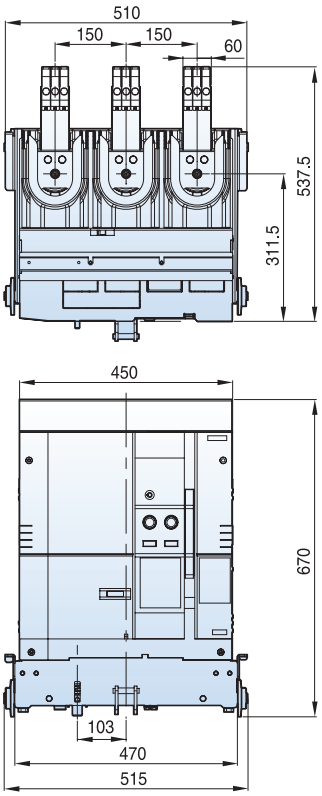

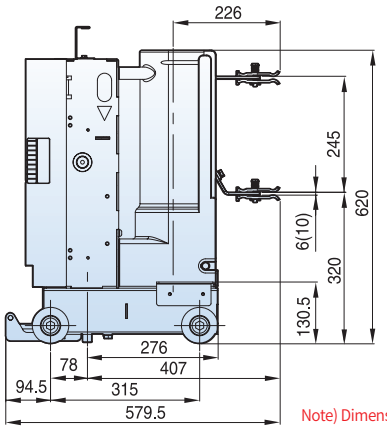

Note) Dimensions in ( ) apply to 1250A

Withdrawable

Type
VL-06G20A06
VL-06G20A13
VL-06G25A06
VL-06G25A13

■ G type unit, phase distance 150mm

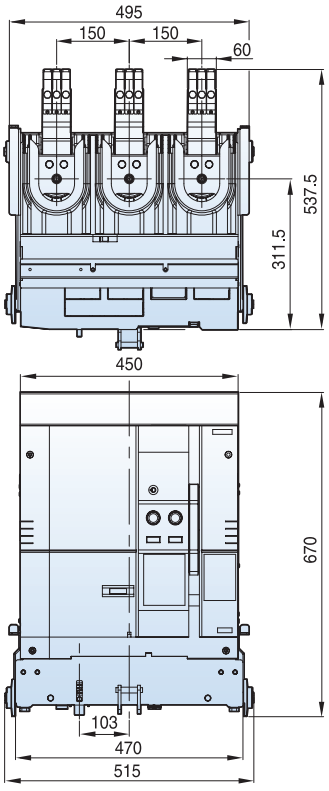

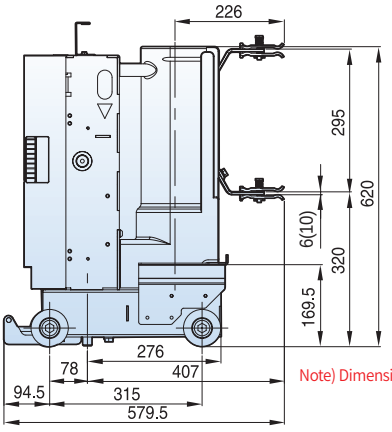

Note) Dimensions in ( ) apply to 1250A

7.2kV, 20/25kA, 630/1250A

Withdrawable

Type
VL-06K20K06
VL-06K20K13
VL-06K25K06
VL-06K25K13

■ K type unit T type, phase distance 150mm

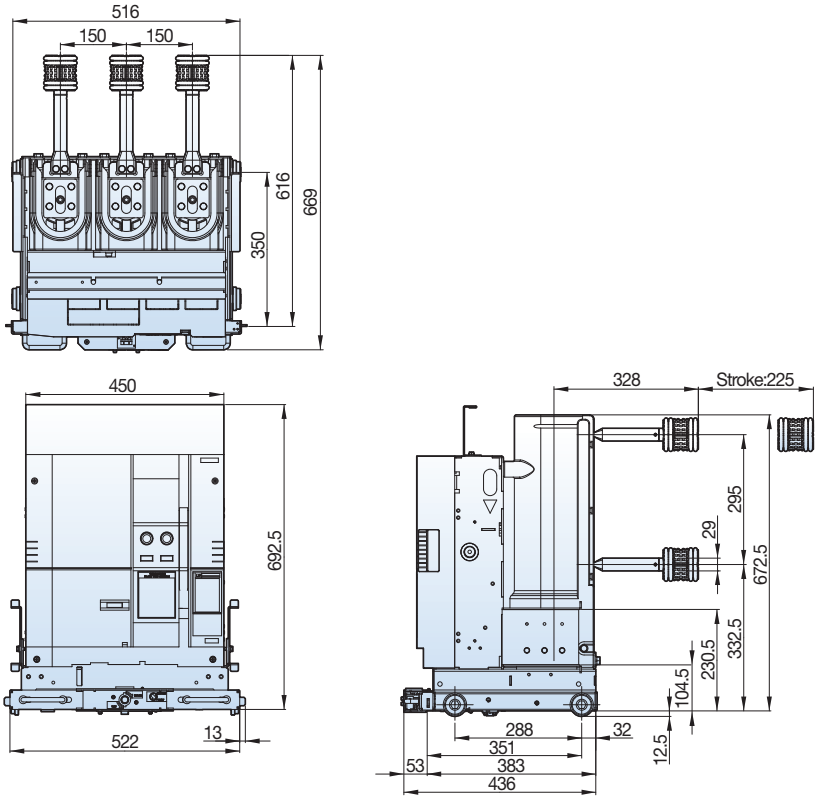

Withdrawable

Type
VL-06K20A06
VL-06K20A13
VL-06K25A06
VL-06K25A13

■ K type unit T2 type, phase distance 150mm

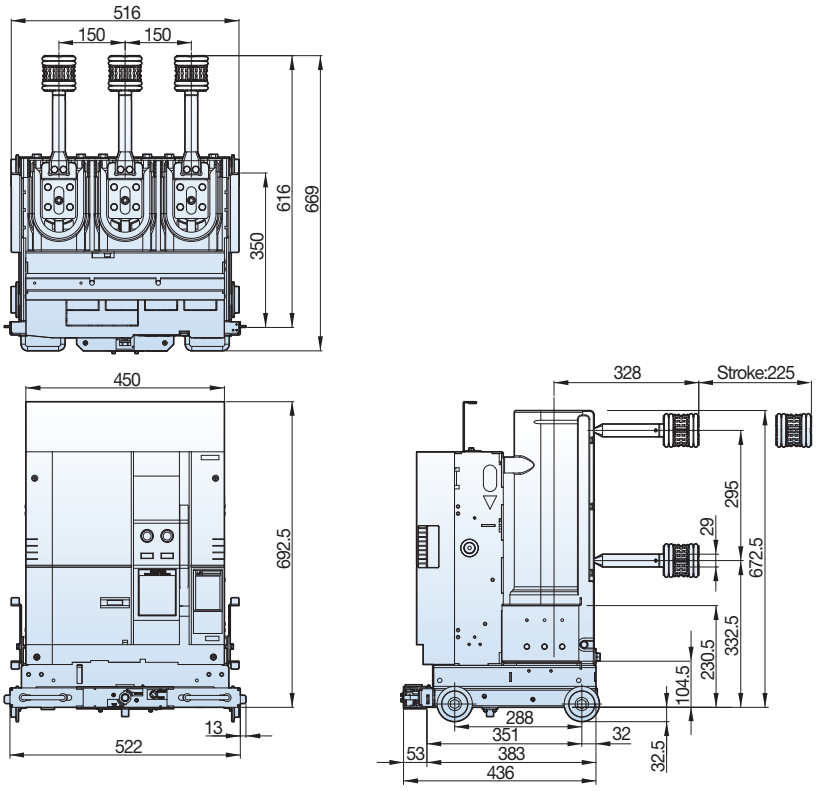

Dimensions - VL type (VL-06/12/17)

7.2kV, 20/25kA, 630/1250A

Withdrawable

Type

VCL-06E20A06
VCL-06E20A13
VCL-06E25A06
VCL-06E25A13

■ E type cradle, phase distance 150mm

Rating	630A	1250A
A	6	10
B	55	60
C	95	90

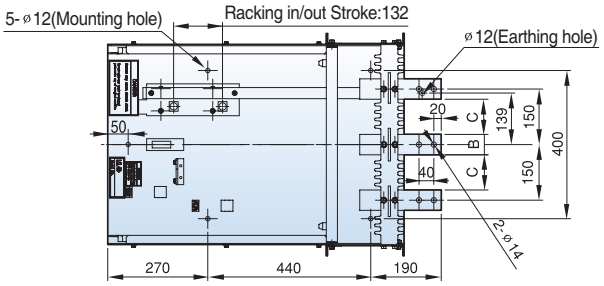

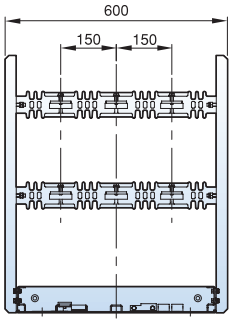

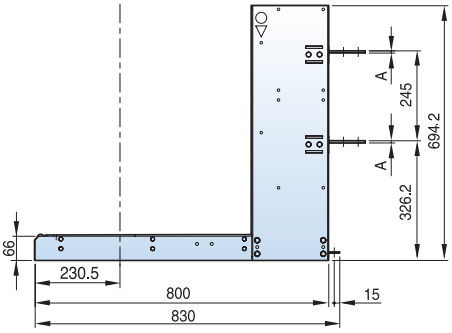

* Please be informed that the switchgear IP cover has to be back of — - — mark.

Withdrawable

Type

VCL-06F20A06
VCL-06F20A13
VCL-06F25A06
VCL-06F25A13

■ F type cradle, phase distance 150mm

Rating	630A	1250A
A	6	10
B	55	60
C	95	90

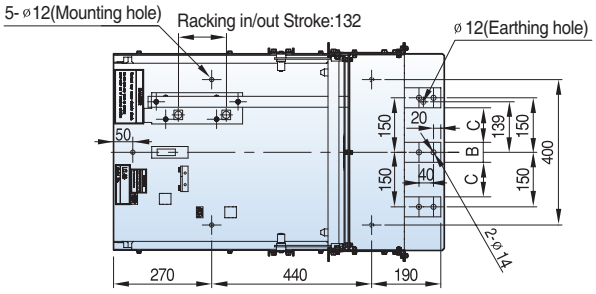

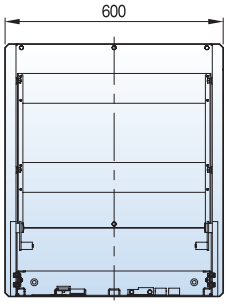

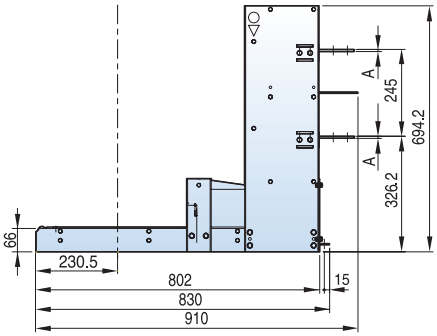

* Please be informed that the switchgear IP cover has to be back of — - — mark.

7.2kV, 20/25kA, 630/1250A

Withdrawable

Type
VCL-06G20A06
VCL-06G20A13
VCL-06G25A06
VCL-06G25A13

■ G type cradle, phase distance 150mm

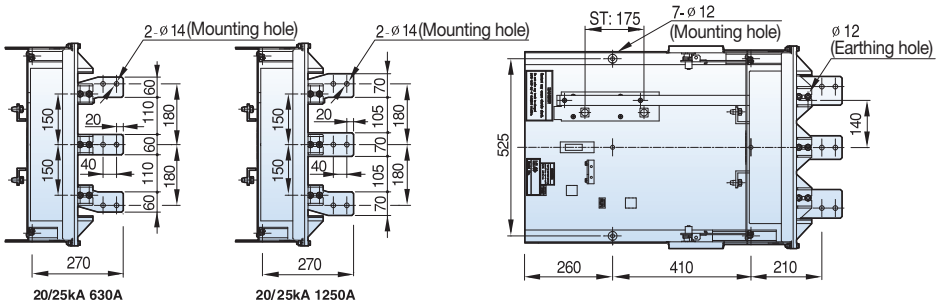

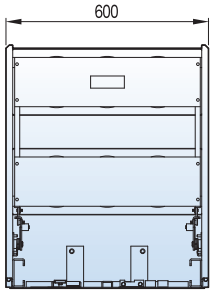

Rating	630A	1250A
A	6	10

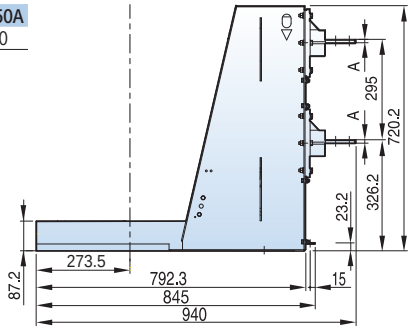

* Please be informed that the switchgear IP cover has to be back of ——- —— mark.

Withdrawable

Type
VL-06H20A06
VL-06H20A13
VL-06H25A06
VL-06H25A13

■ H type unit, phase distance 150mm

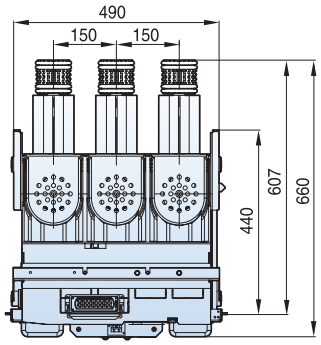

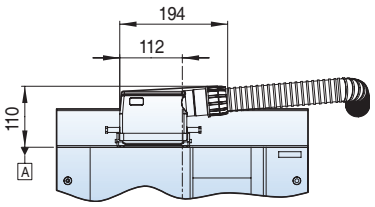

Note) Please be informed that When Q-type connecter is used to design switchgears, the height can be 110mm higher based on "A"

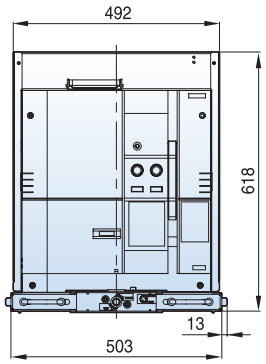

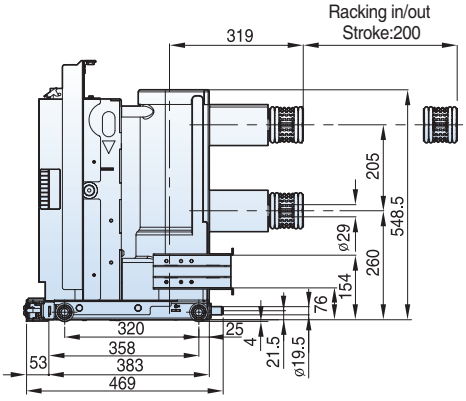

Dimensions - VL type (VL-06/12/17)

7.2kV, 20/25kA, 630/1250A

Withdrawable

Type
VCL-06Ha20A06
VCL-06Ha20A13
VCL-06Ha25A06
VCL-06Ha25A13

■ Ha type cradle, phase distance 150mm

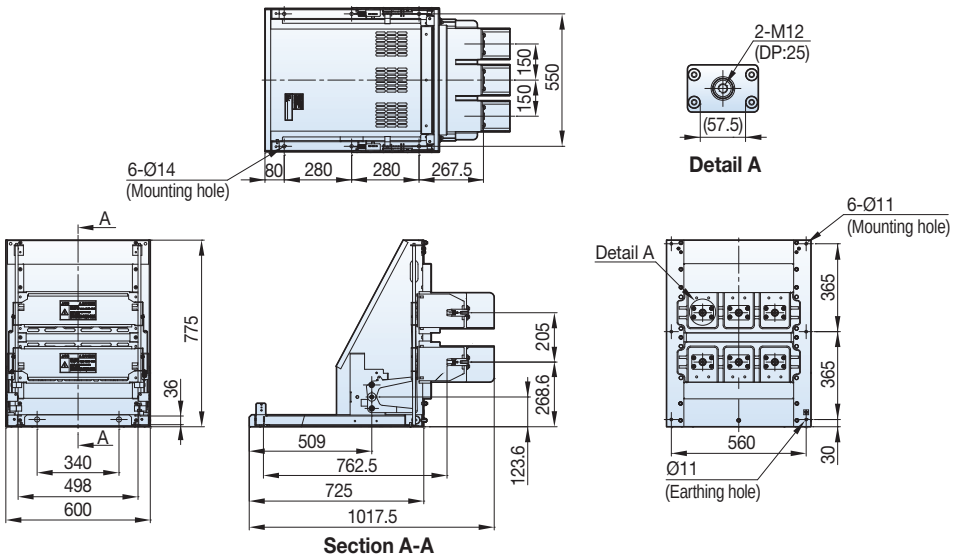

■ Ha type cradle, phase distance 150mm (Earthing S/W Option type)

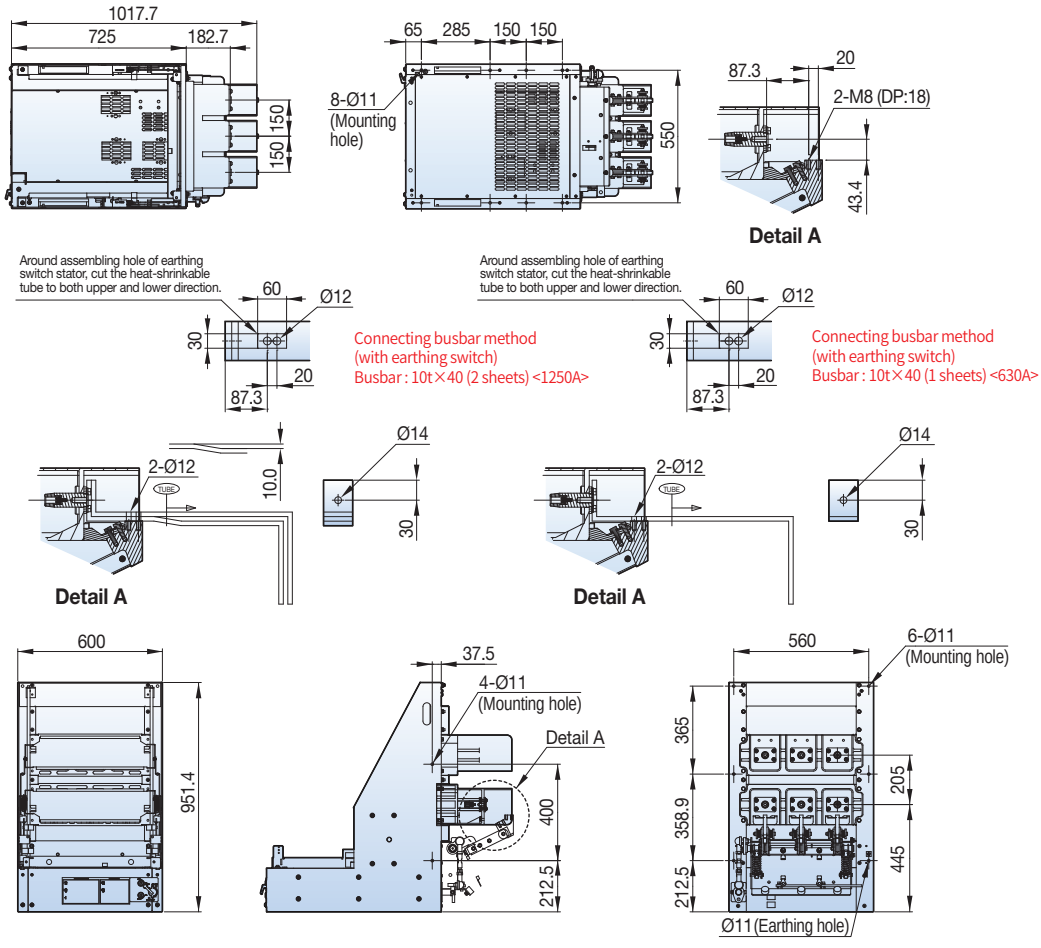

7.2kV, 20/25kA, 630/1250A

Withdrawable

Type
VCL-06H20A06
VCL-06H20A13
VCL-06H25A06
VCL-06H25A13

■ H type cradle, phase distance 150mm

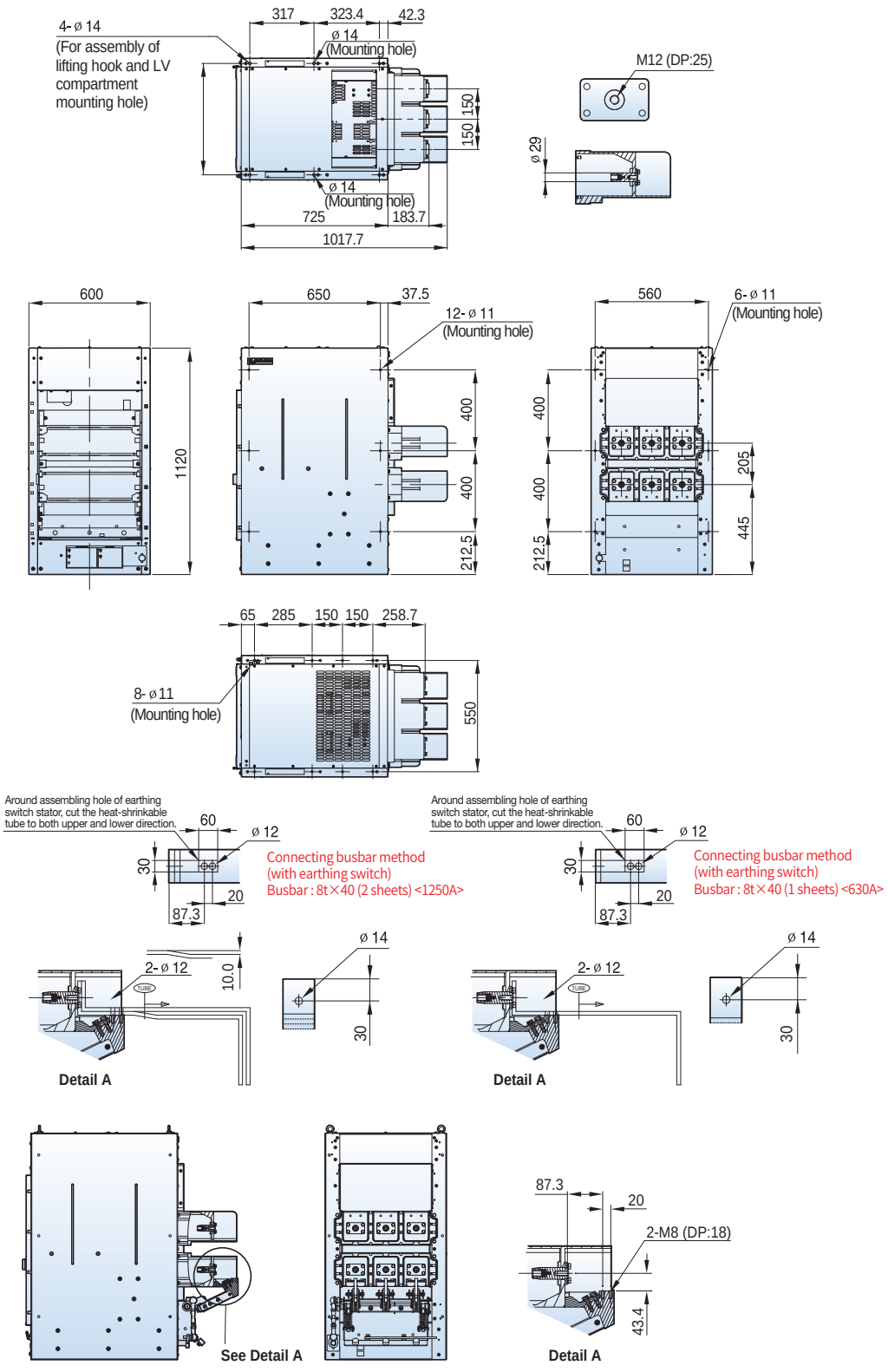

Dimensions - VL type (VL-06/12/17)

7.2kV, 20/25kA, 2000A

Fixed

Type
VL-06P20A20
VL-06P25A20

■ P type, phase distance 150mm

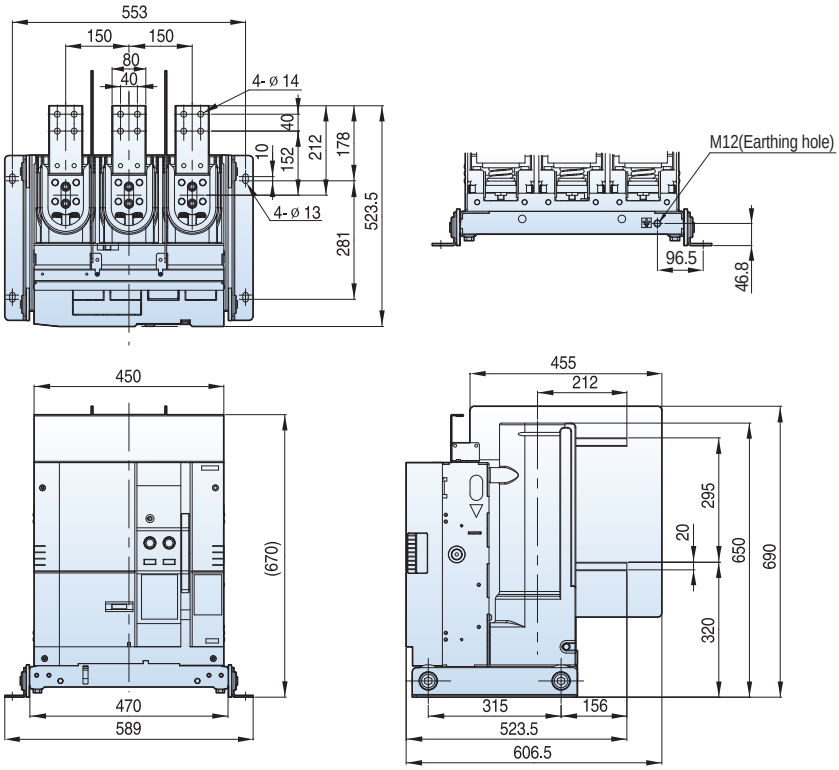

Withdrawable

Type
VL-06E20A20
VL-06E25A20

■ E type unit, phase distance 150mm

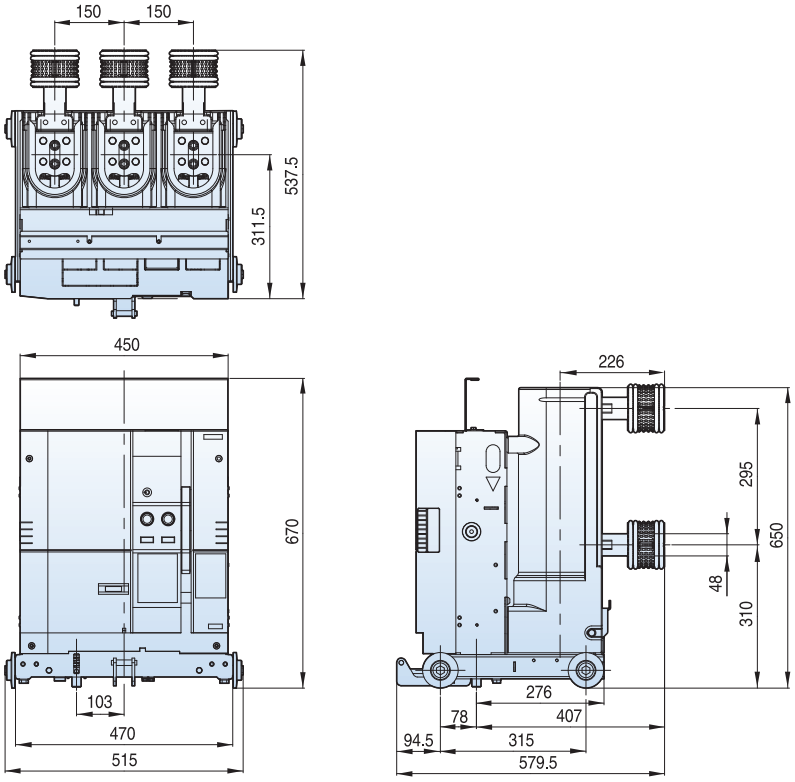

7.2kV, 20/25kA, 2000A

Withdrawable

■ F/G type unit, phase distance 150mm

Type
VL-06F20A20
VL-06F25A20
VL-06G20A20
VL-06G25A20

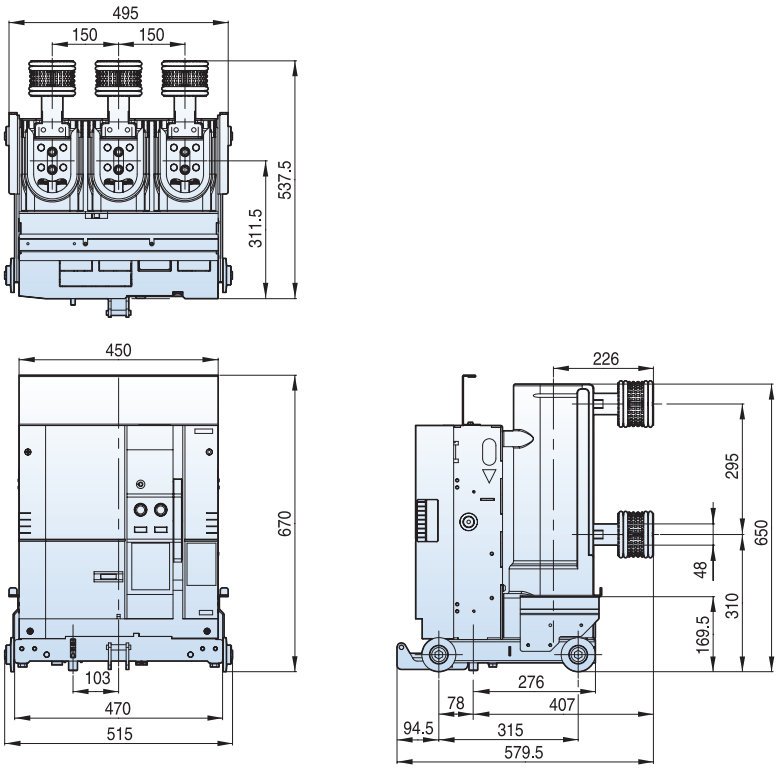

Withdrawable

■ K type unit T type, phase distance 150mm

Type
VL-06K20K20
VL-06K25K20

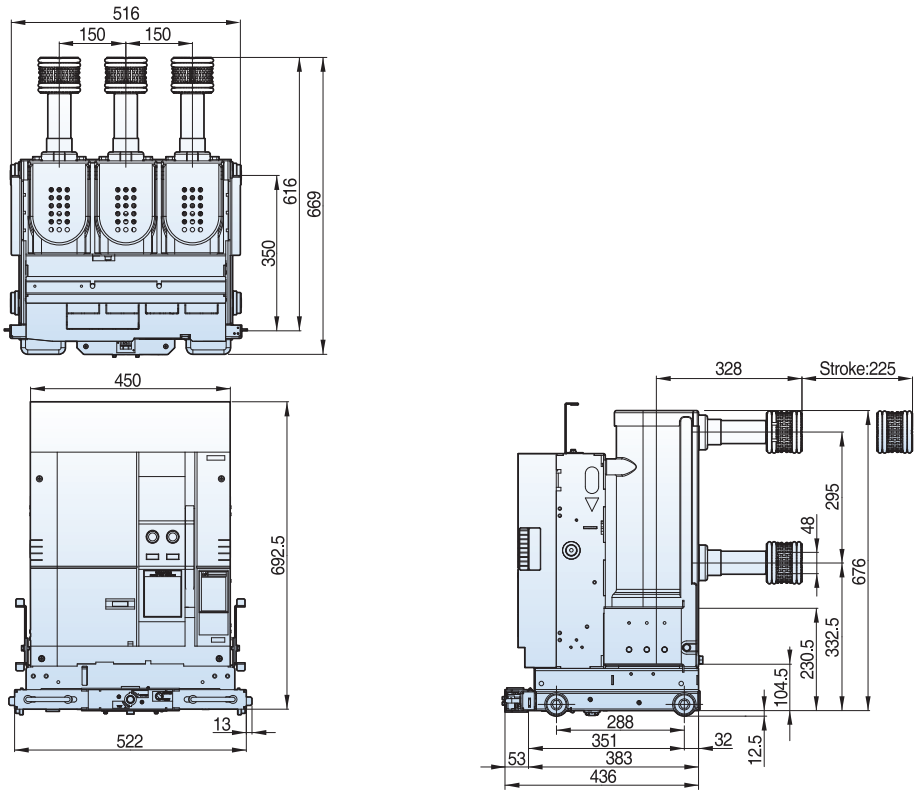

Dimensions - VL type (VL-06/12/17)

7.2kV, 20/25kA, 2000A

Withdrawable

Type

VL-06K20A20
VL-06K25A20

■ K type unit T2 type, phase distance 150mm

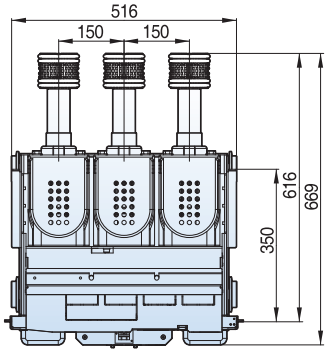

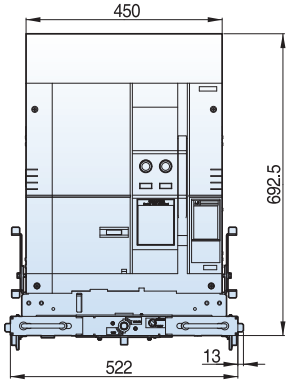

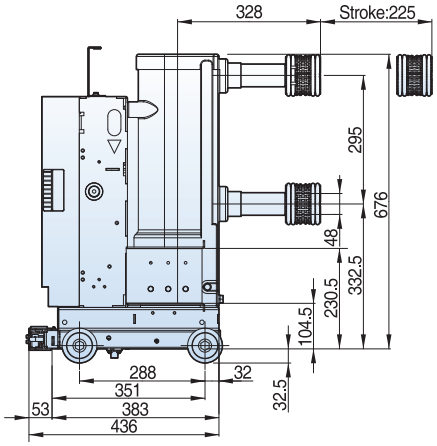

Withdrawable

Type

VCL-06E20A20
VCL-06E25A20

■ E type cradle, phase distance 150mm

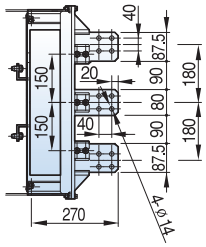

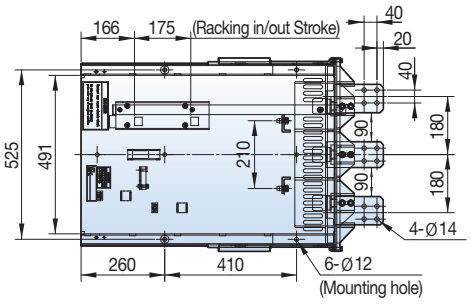

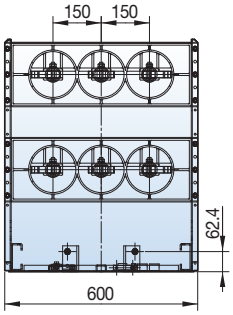

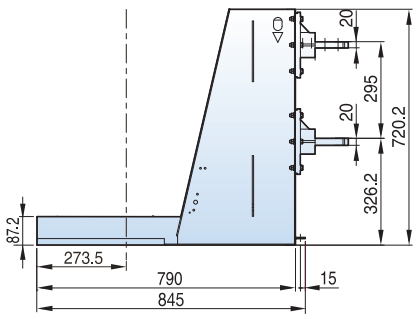

* Please be informed that the switchgear IP cover has to be back of —·—·— mark.

7.2kV, 20/25kA, 2000A

Withdrawable

■ F type cradle, phase distance 150mm

Type
VCL-06F20A20
VCL-06F25A20

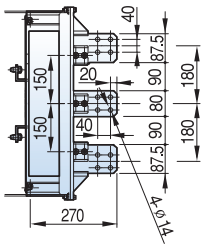

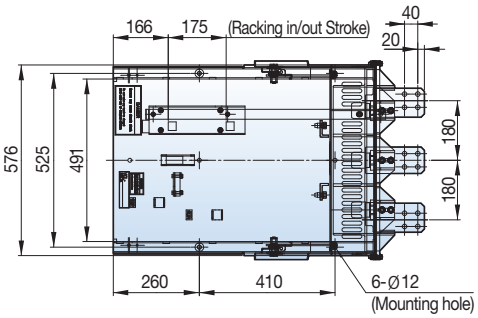

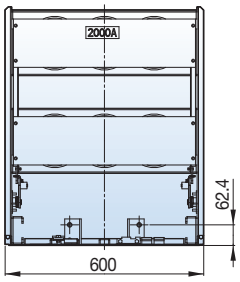

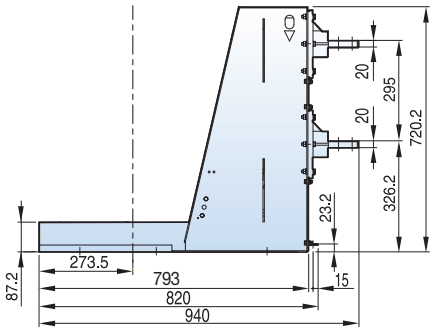

* Please be informed that the switchgear IP cover has to be back of — - — mark.

Withdrawable

■ G type cradle, phase distance 150mm

Type
VCL-06G20A20
VCL-06G25A20

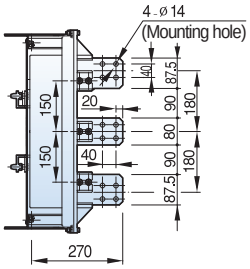

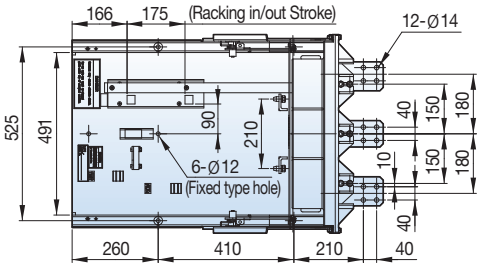

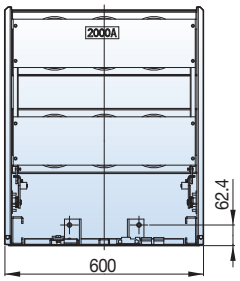

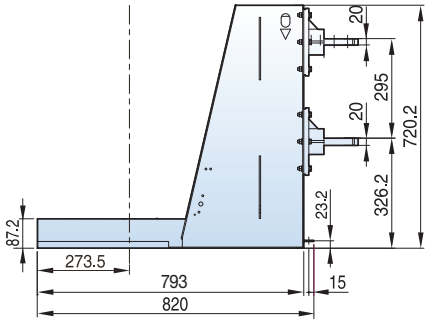

* Please be informed that the switchgear IP cover has to be back of — - — mark.

Dimensions - VL type (VL-06/12/17)

7.2kV, 20/25kA, 2000A

Withdrawable

Type
VL-06H20A20
VL-06H25A20

■ H type unit, phase distance 150mm

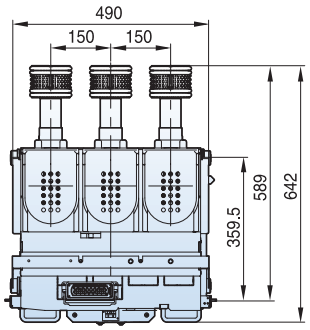

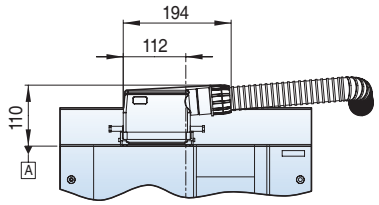

Note) Please be informed that When Q-type connecter is used to design switchgears, the height can be 110mm higher based on "A"

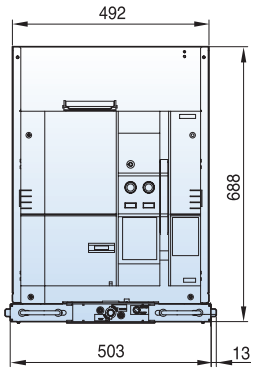

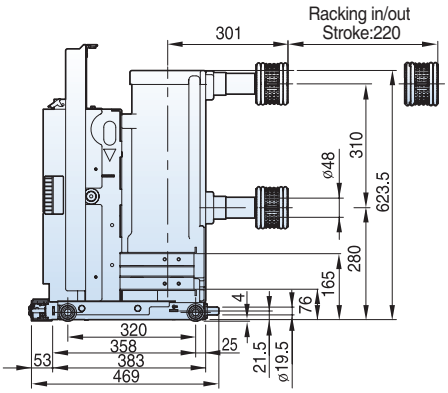

7.2kV, 20/25kA, 2000A

Withdrawable

Type
VCL-06Ha20A20
VCL-06Ha25A20

■ Ha type cradle, phase distance 150mm

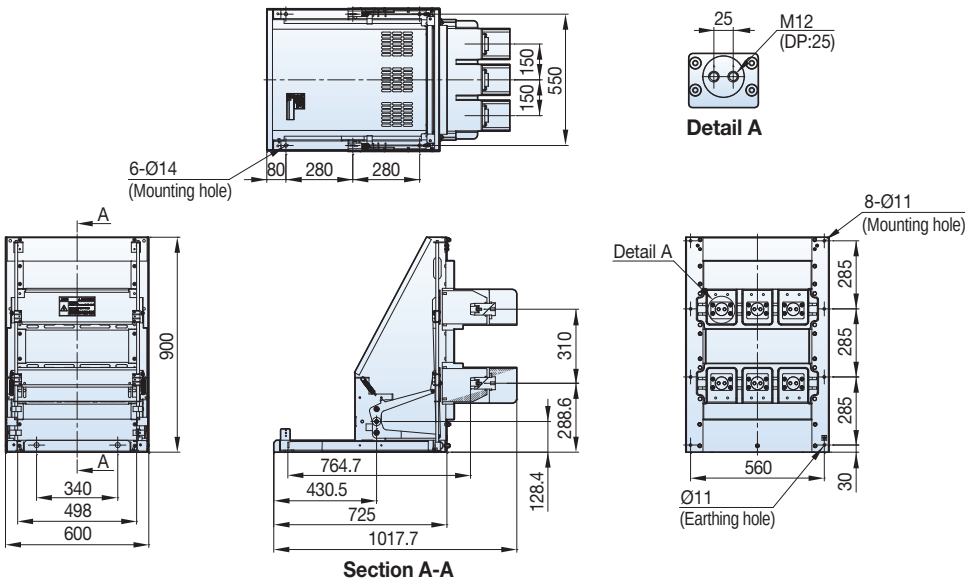

■ Ha type cradle, phase distance 150mm (Earthing S/W Option type)

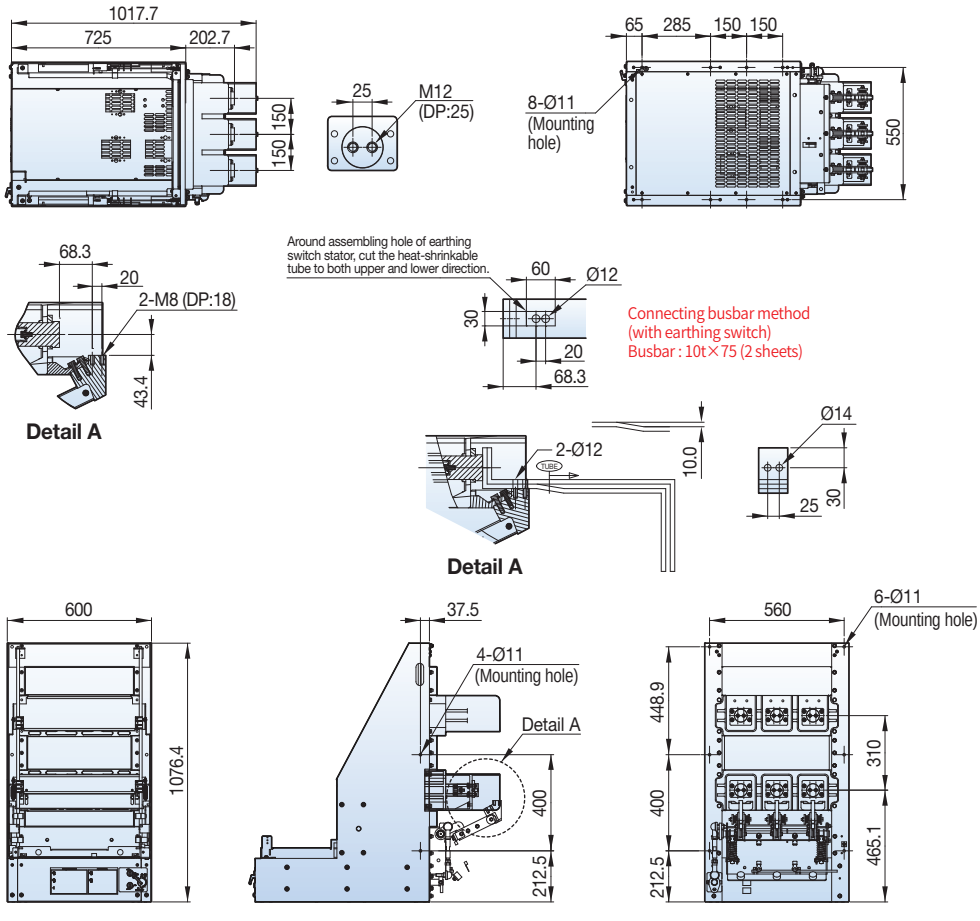

Dimensions - VL type (VL-06/12/17)

7.2kV, 20/25kA, 2000A

Withdrawable

Type
VCL-06H20A20
VCL-06H25A20

■ H type cradle, phase distance 150mm

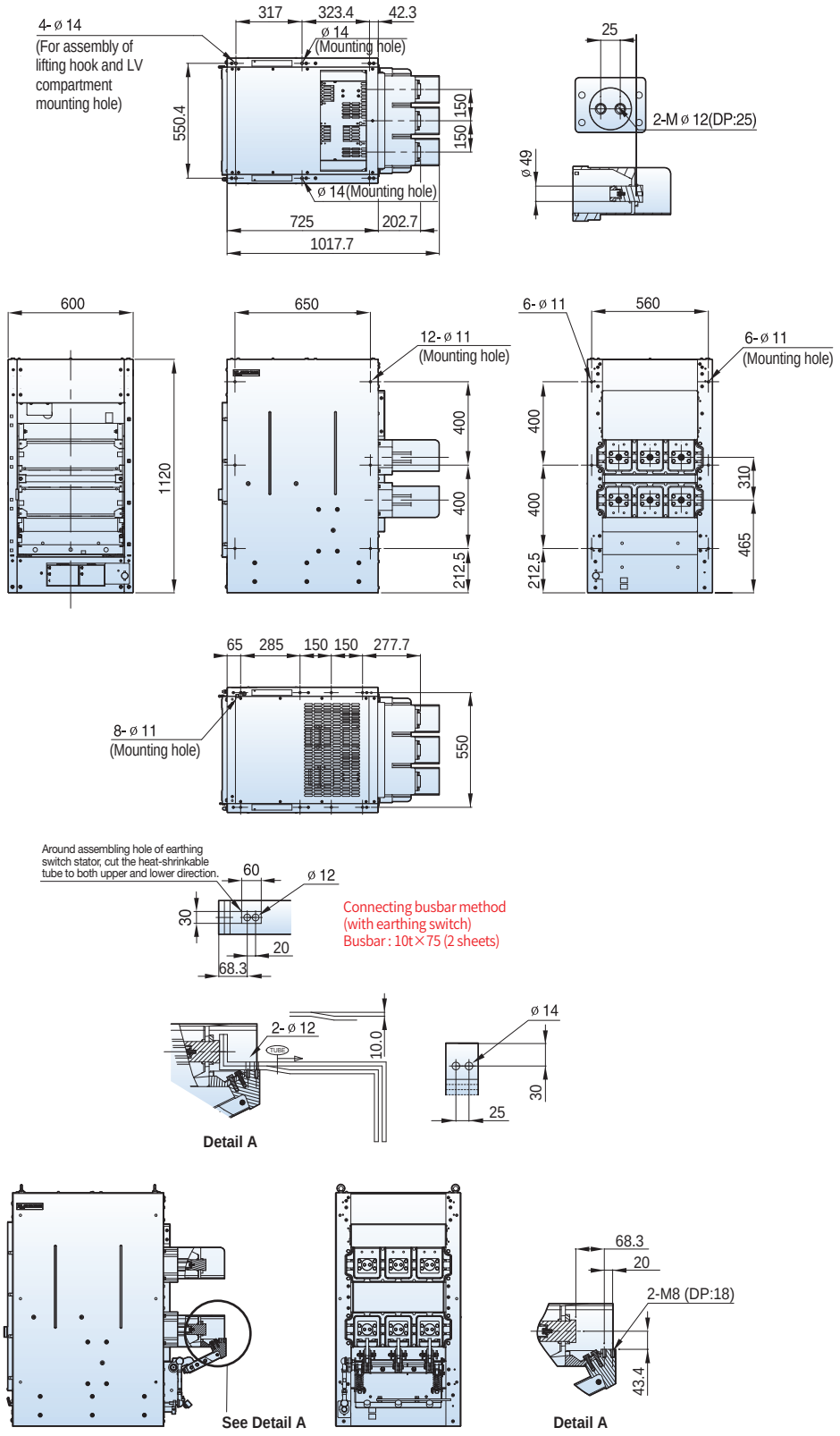

7.2kV, 31.5kA, 630A

Fixed

Type
VL-06P32A06

■ P type, phase distance 150mm

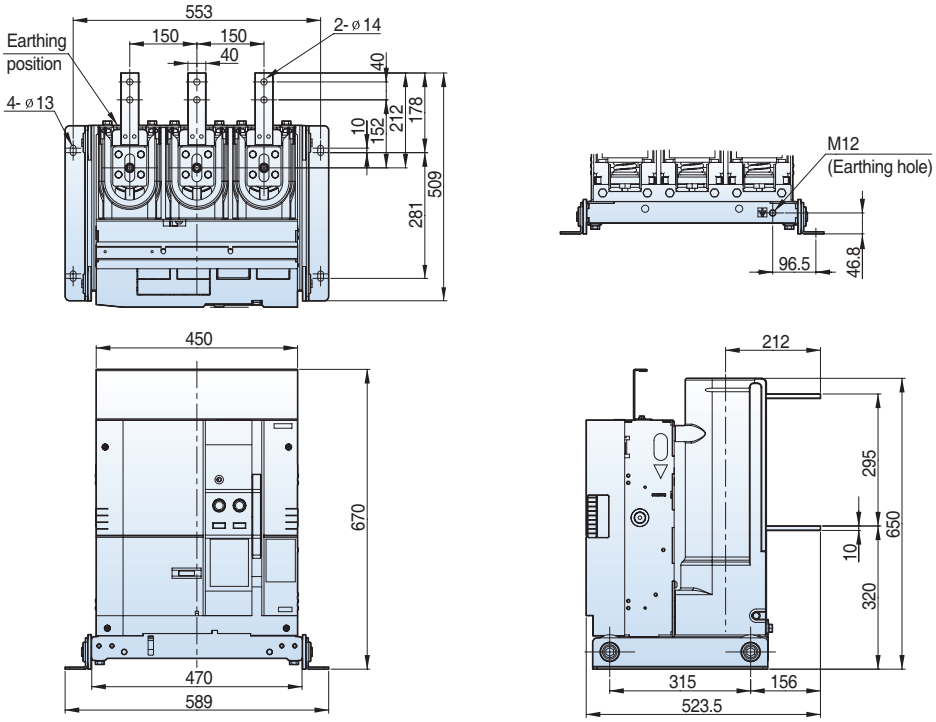

Withdrawable

Type
VL-06H32A06

■ H type unit, phase distance 150mm

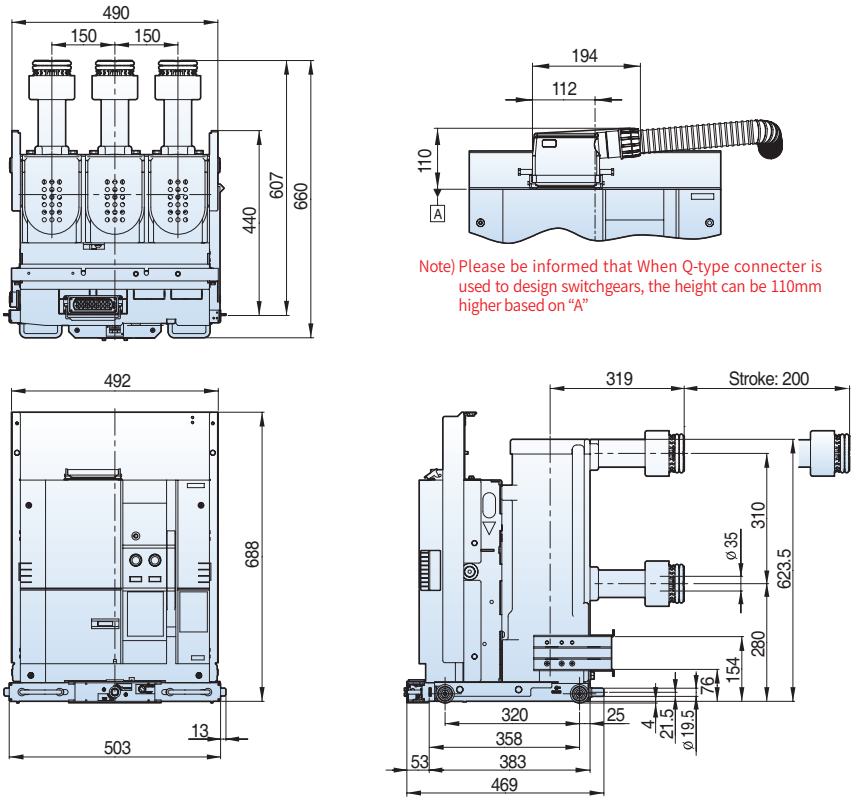

Note) Please be informed that When Q-type connecter is used to design switchgears, the height can be 110mm higher based on "A"

Dimensions - VL type (VL-06/12/17)

7.2kV, 31.5kA, 630A

Withdrawable

Type
VCL-06Ha32A06

■ Ha type cradle, phase distance 150mm

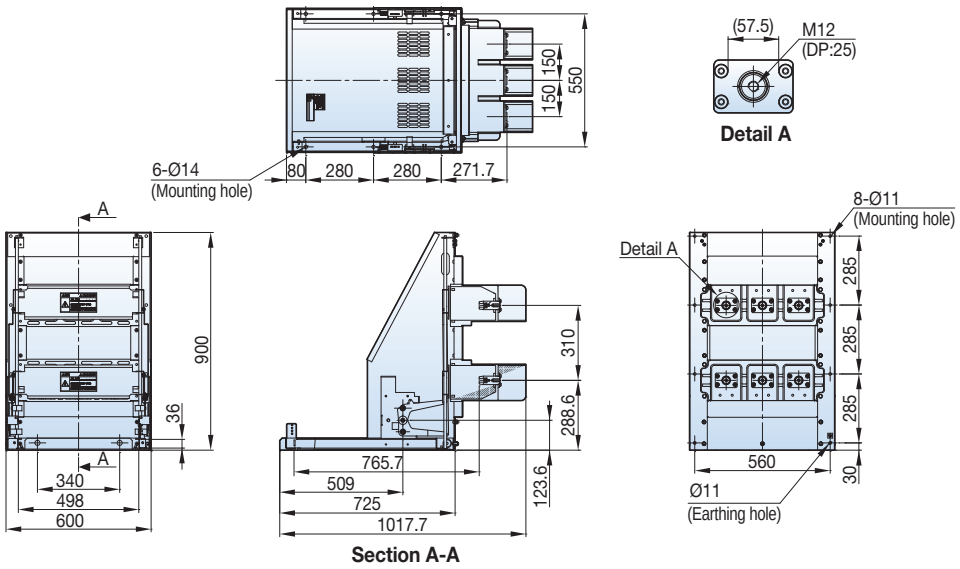

■ Ha type cradle, phase distance 150mm (Earthing S/W Option type)

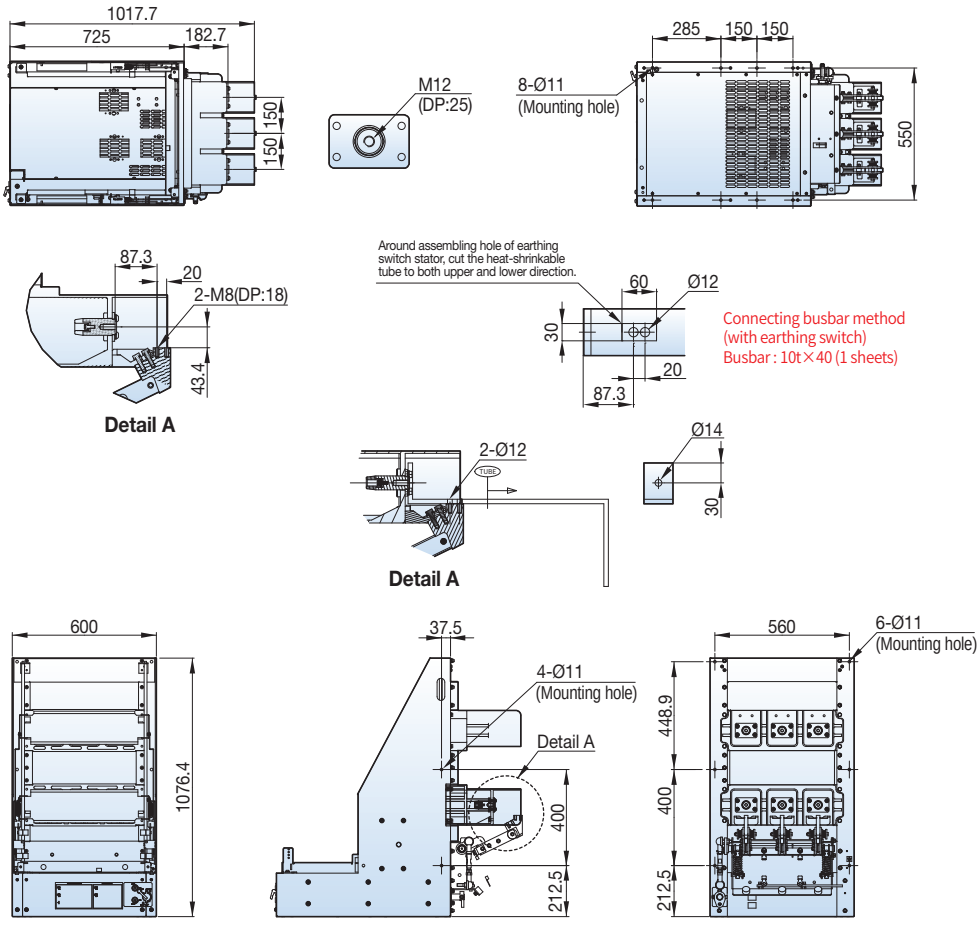

7.2kV, 31.5kA, 630A

Withdrawable

Type
VCL-06H32A06

■ H type cradle, phase distance 150mm

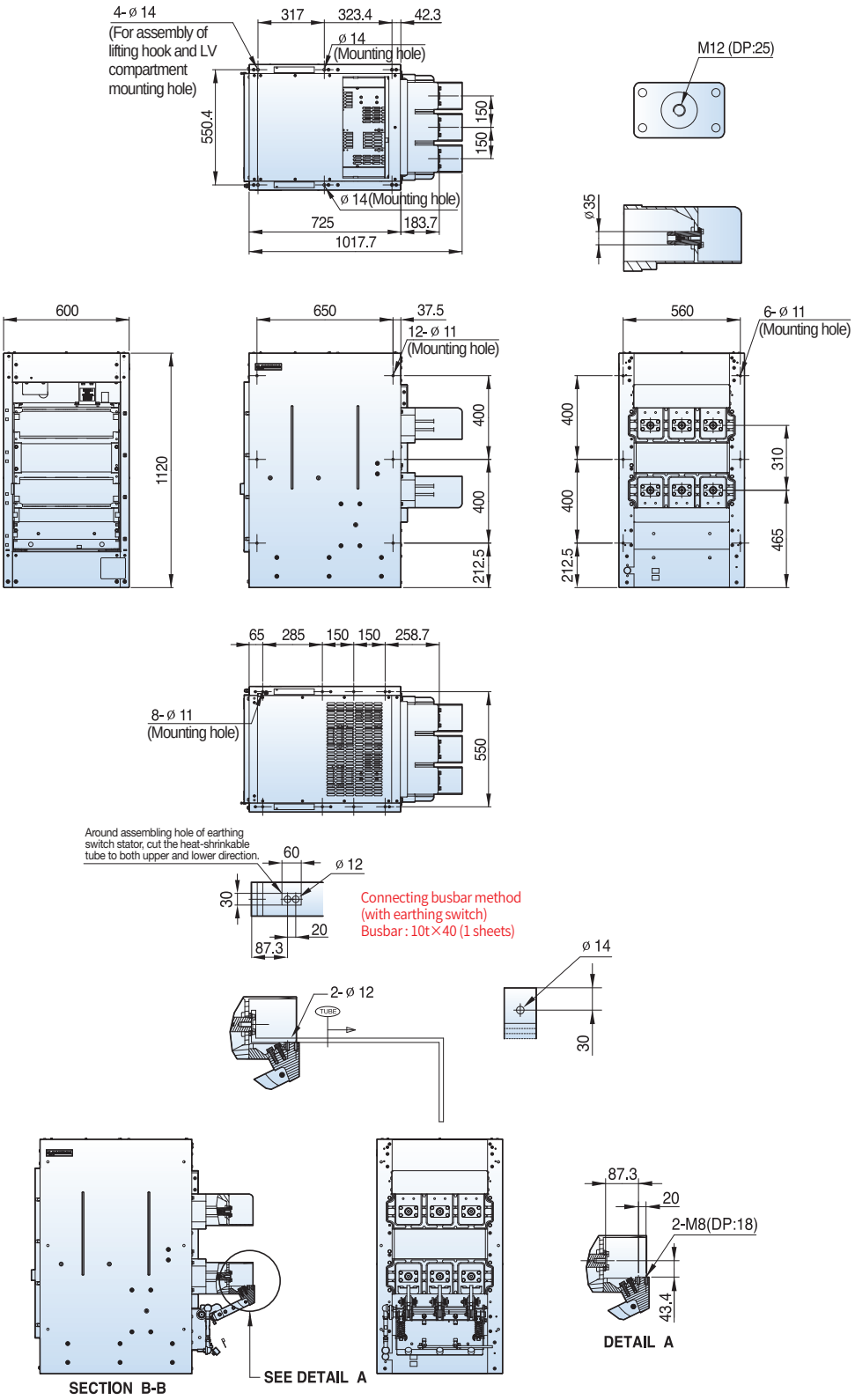

Dimensions - VL type (VL-06/12/17)

7.2kV, 31.5kA, 1250A

Fixed

Type
VL-06P32A13

■ P type, phase distance 150mm

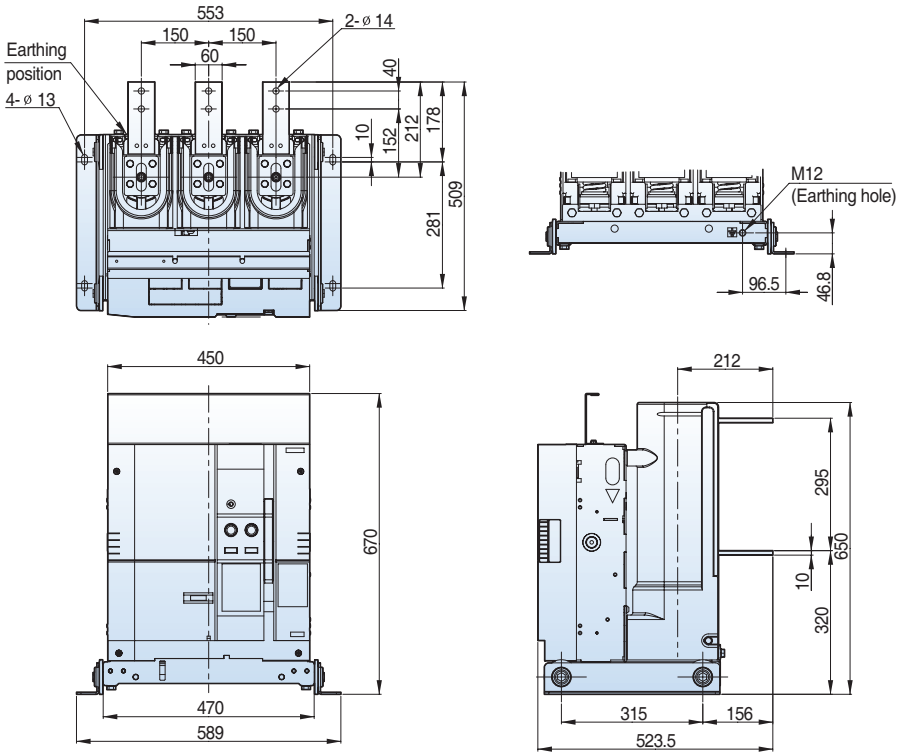

Withdrawable

Type
VL-06E32A13

■ E type unit, phase distance 150mm

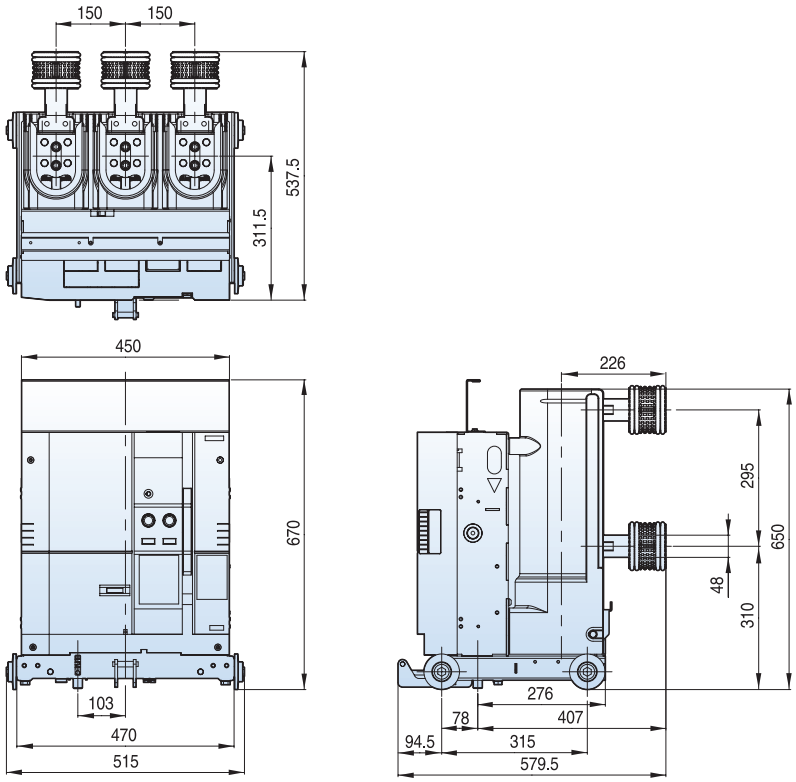

7.2kV, 31.5kA, 1250A

Withdrawable

■ F/G type unit, phase distance 150mm

Type
VL-06F32A13
VL-06G32A13

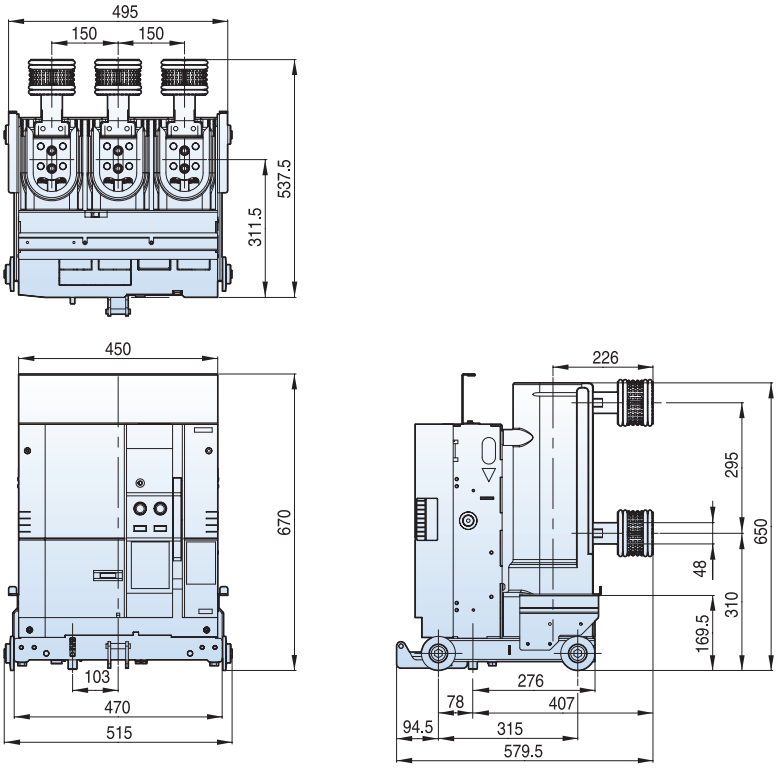

Withdrawable

■ E type cradle, phase distance 150mm

Type
VCL-06E32A13

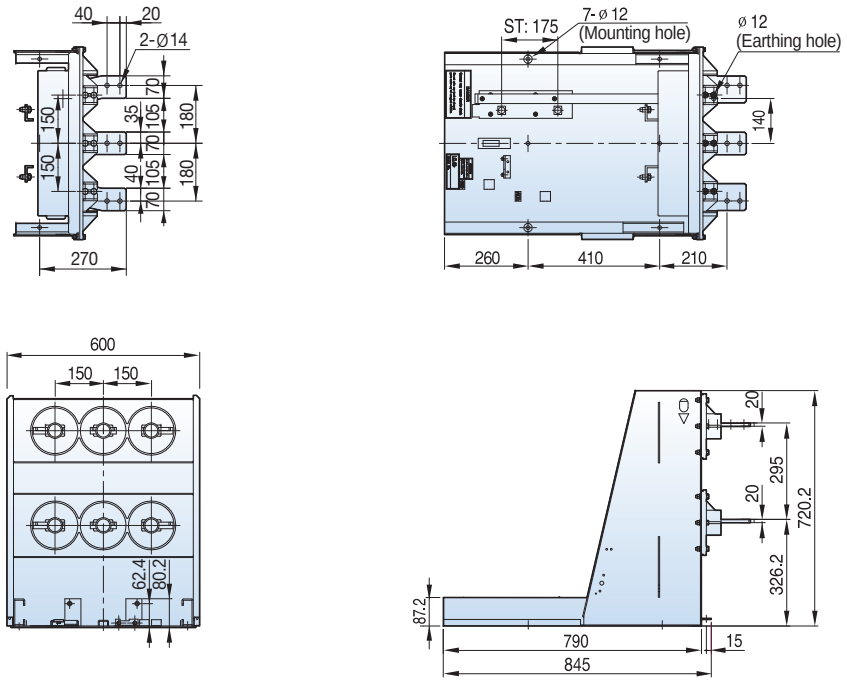

Dimensions - VL type (VL-06/12/17)

7.2kV, 31.5kA, 1250A

Withdrawable

■ F type cradle , phase distance 150mm

Type
VCL-06F32A13

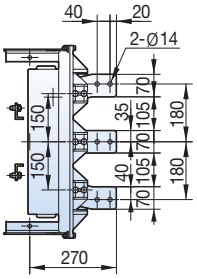

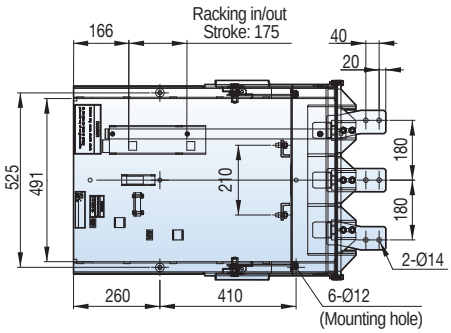

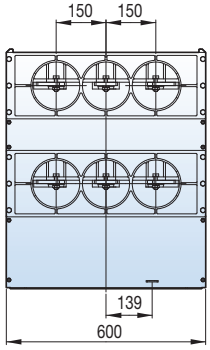

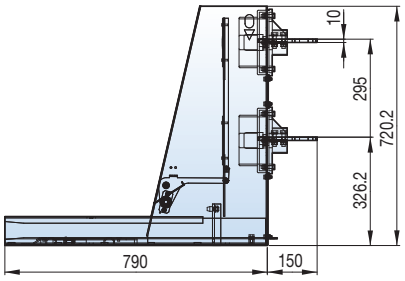

Withdrawable

■ G type cradle, phase distance 150mm

Type
VCL-06G32A13

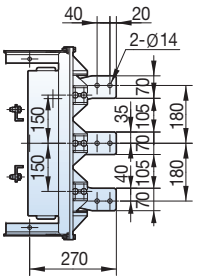

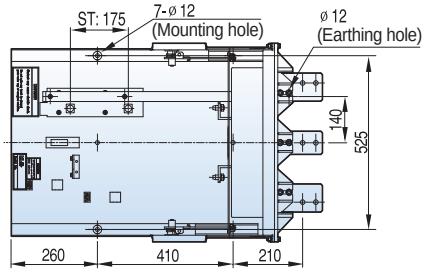

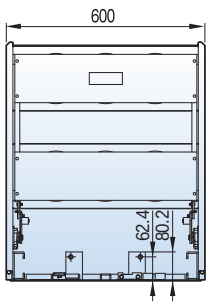

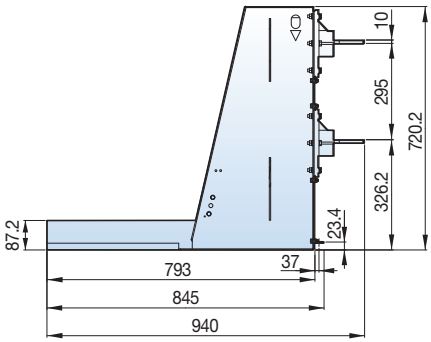

7.2kV, 31.5kA, 1250A

Withdrawable

■ K type unit T type, phase distance 150mm

Type
VL-06K32K13

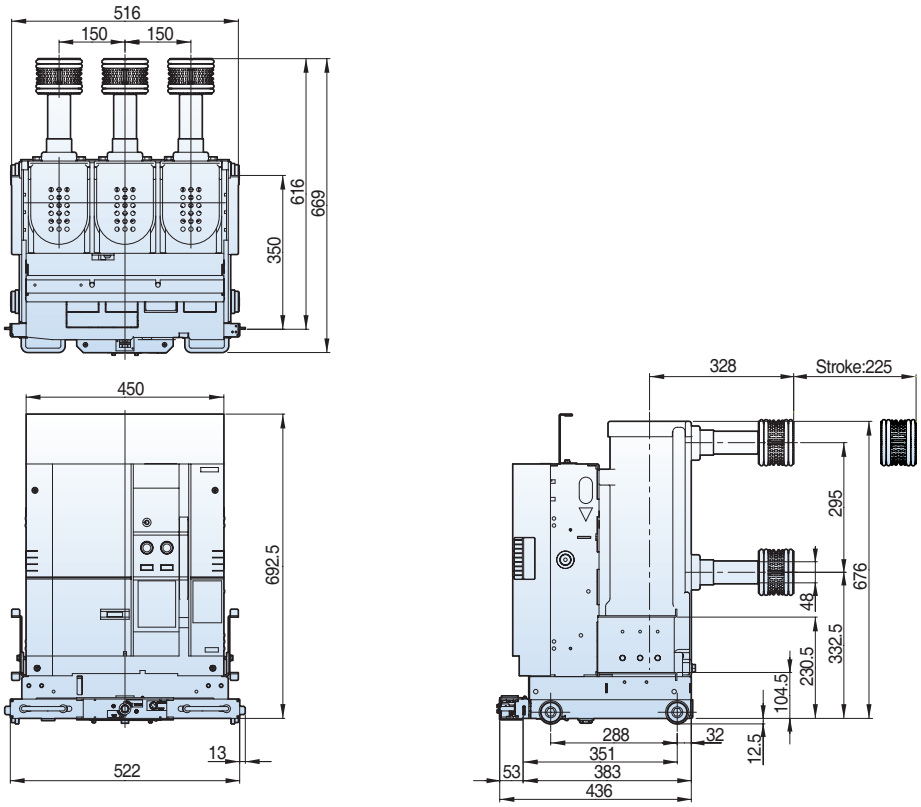

Withdrawable

■ K type unit T2 type, phase distance 150mm

Type
VL-06K32A13

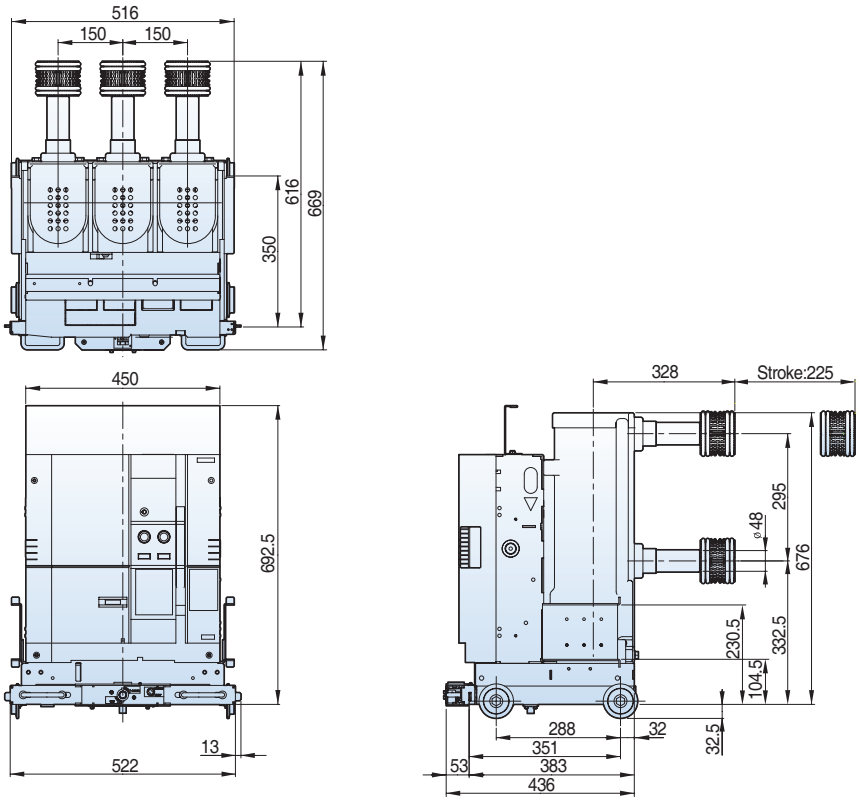

Dimensions - VL type (VL-06/12/17)

7.2kV, 31.5kA, 1250A

Withdrawable

■ MCSG cradle T type, phase distance 150mm

Type
VCL-06K32K13

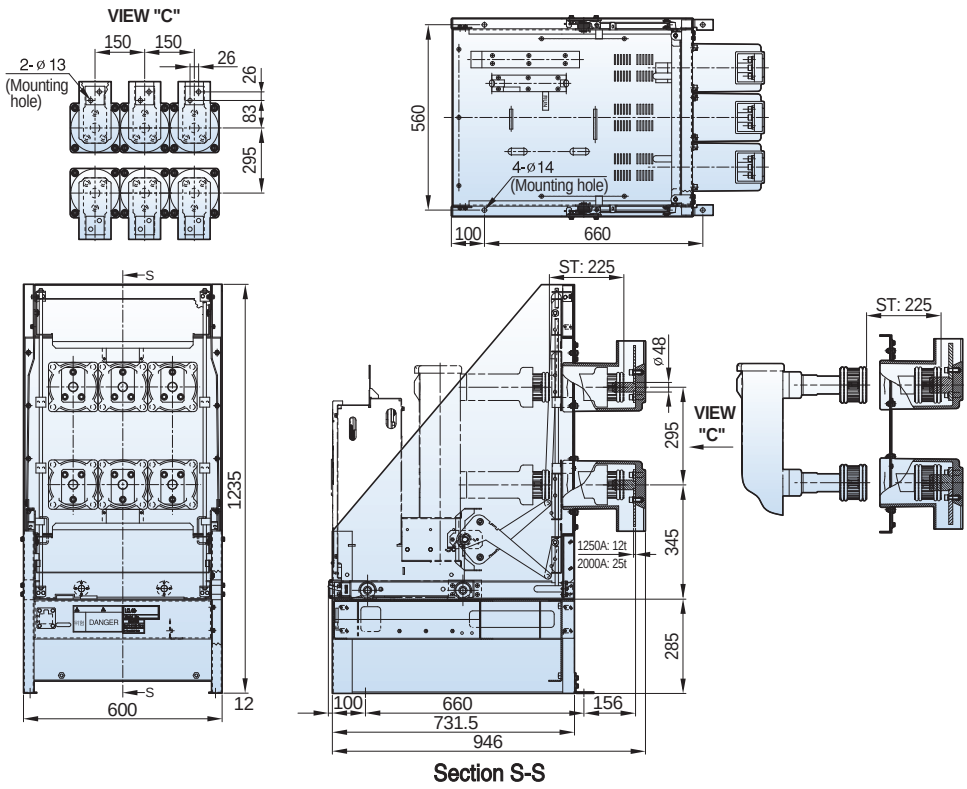

Section S-S

Withdrawable

■ MCSG cradle T2 type, phase distance 150mm

Type
VCL-06K32A13

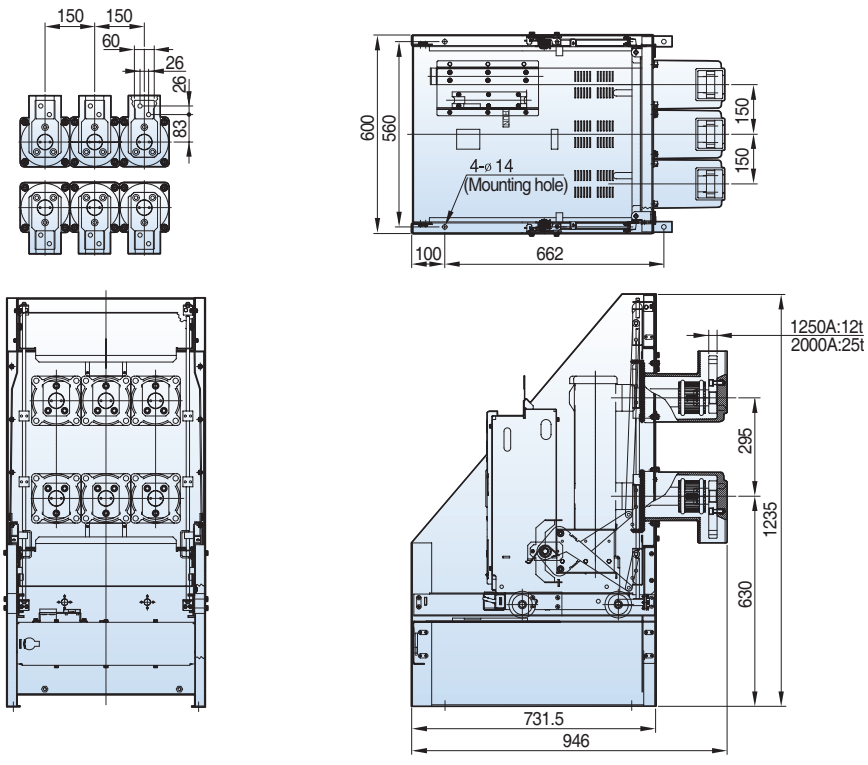

7.2kV, 31.5kA, 1250A

Withdrawable

Type
VL-06H32A13

■ H type unit, phase distance 150mm

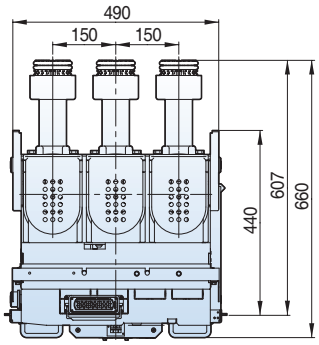

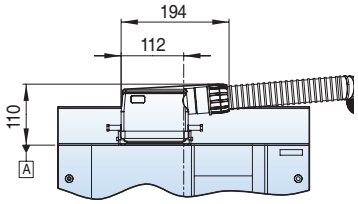

Note) Please be informed that When B-type connecter is used to design switchgears, the height can be 110mm higher based on "A"

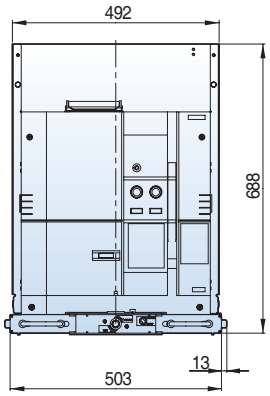

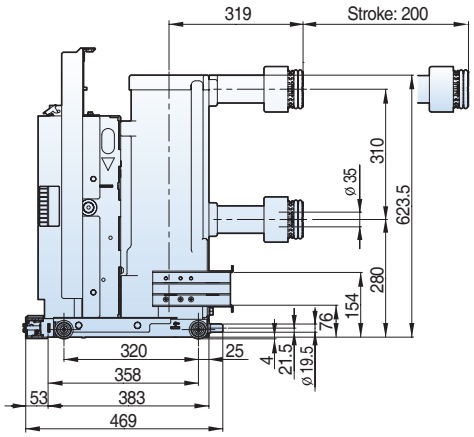

Dimensions - VL type (VL-06/12/17)

7.2kV, 31.5kA, 1250A

Withdrawable

Type
VCL-06Ha32A13

■ Ha type cradle, phase distance 150mm

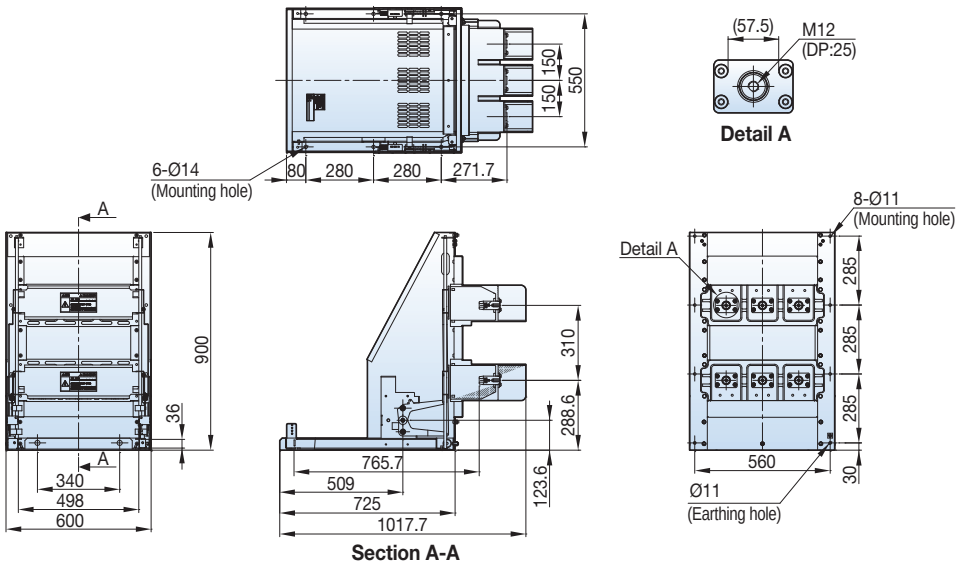

■ Ha type cradle, phase distance 150mm (Earthing S/W Option type)

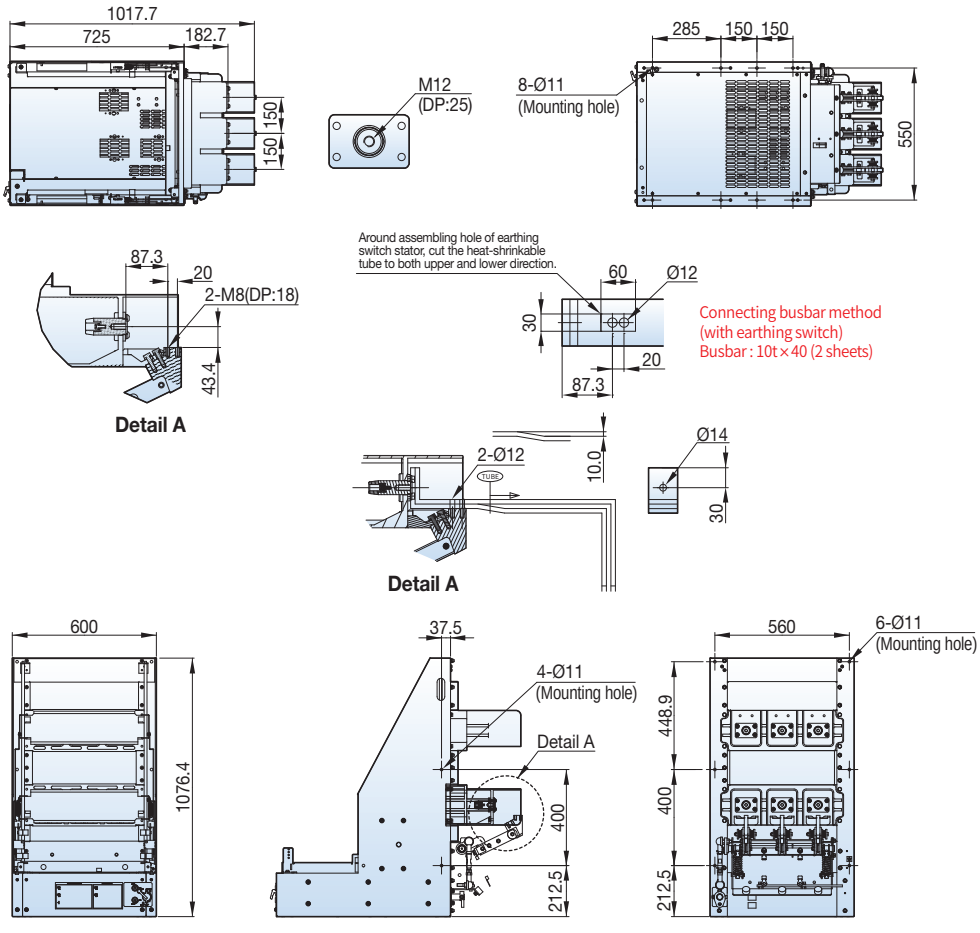

7.2kV, 31.5kA, 1250A

Withdrawable

Type
VCL-06H32A13

■ H type cradle, phase distance 150mm

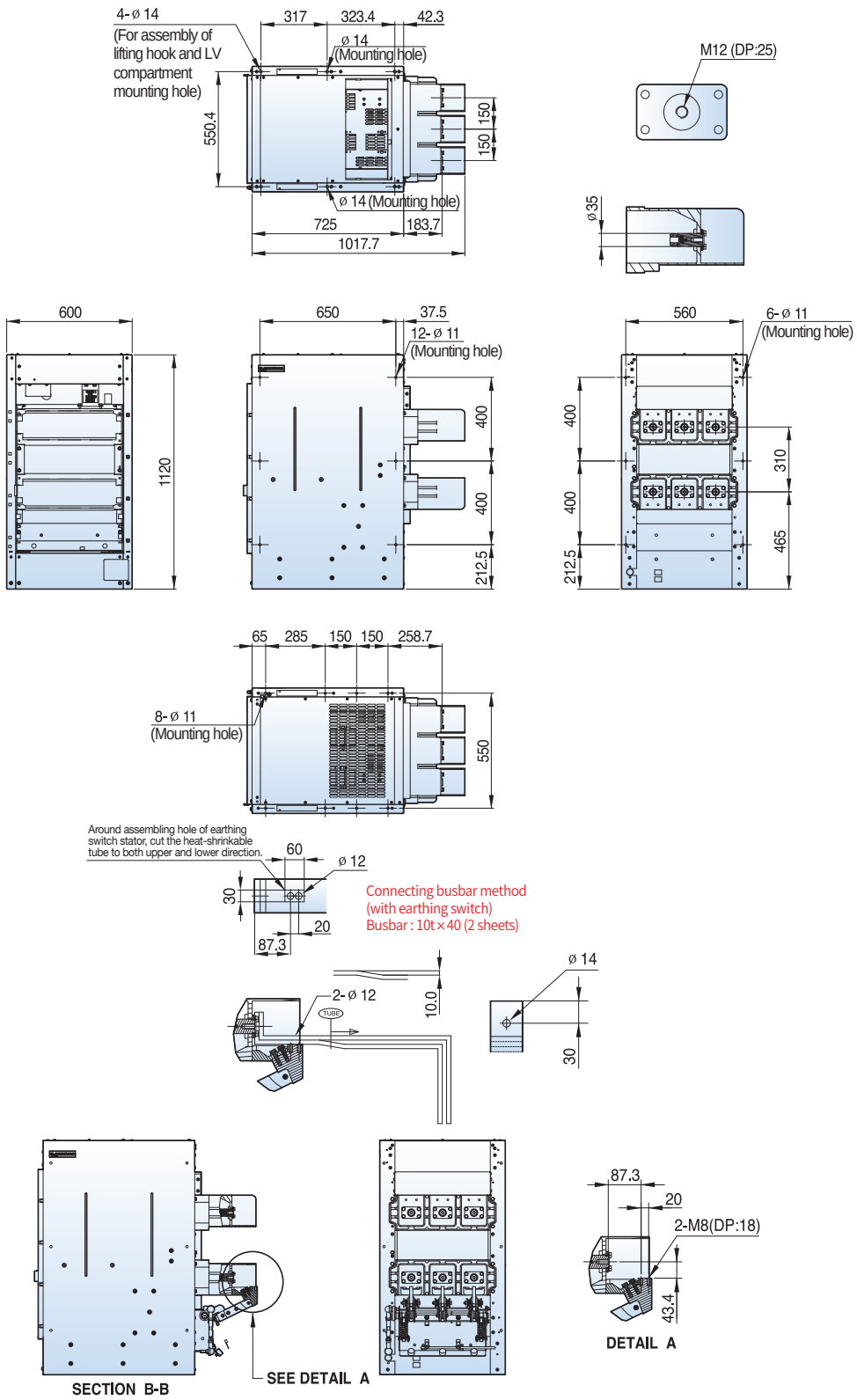

Dimensions - VL type (VL-06/12/17)

7.2kV, 31.5kA, 2000A

Fixed

Type
VL-06P32A20

■ P type, phase distance 150mm

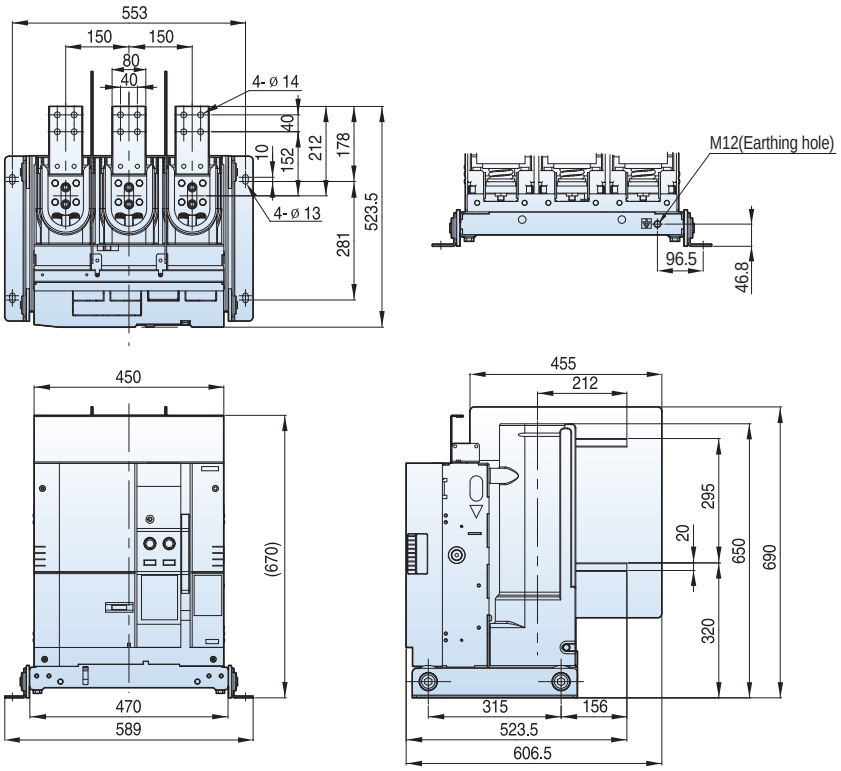

Withdrawable

Type
VL-06E32A20

■ E type unit, phase distance 150mm

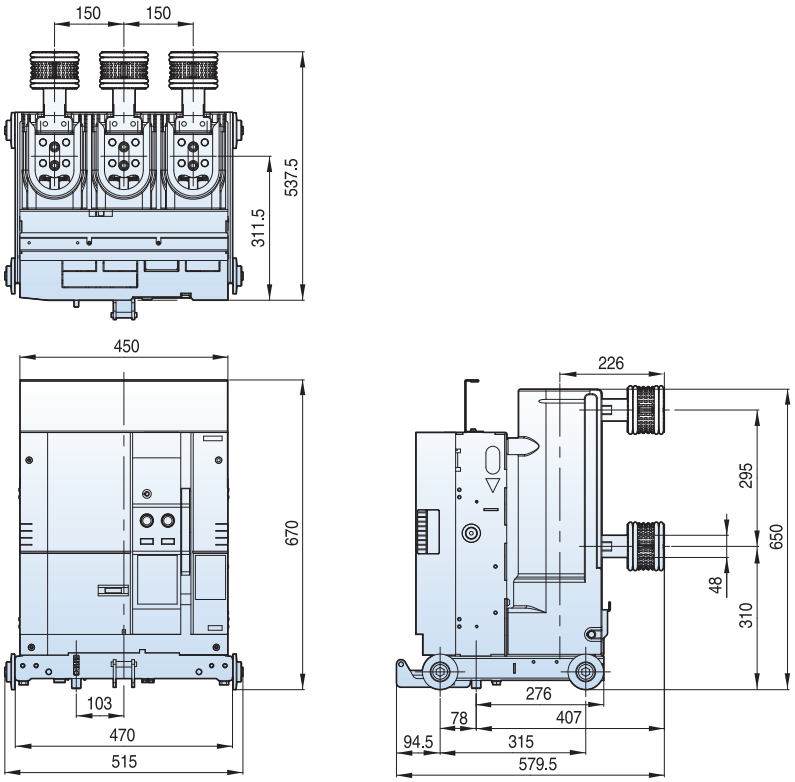

7.2kV, 31.5kA, 2000A

Withdrawable

■ F/G type unit, phase distance 150mm

Type
VL-06F32A20
VL-06G32A20

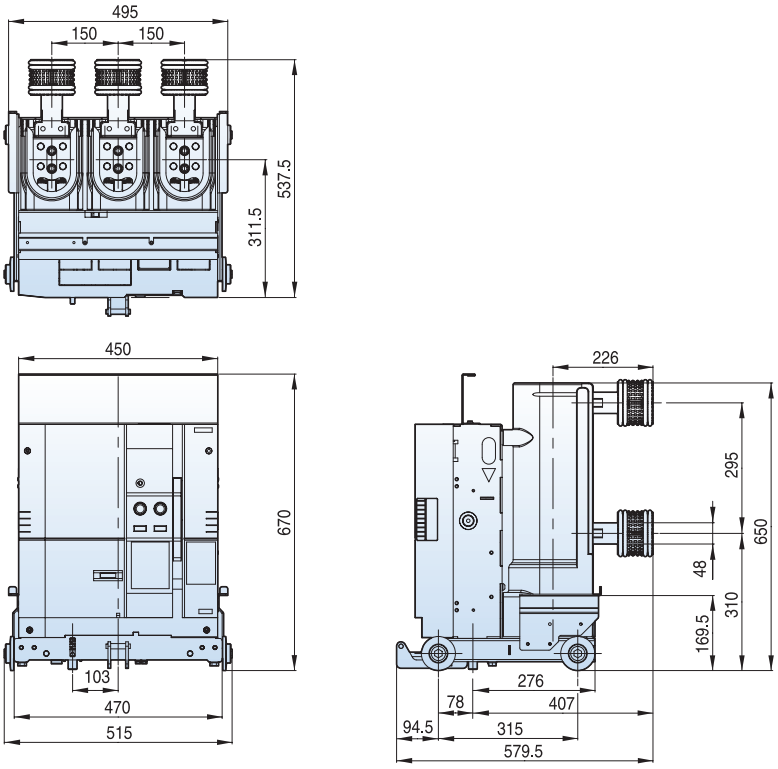

Withdrawable

■ E type cradle, phase distance 150mm

Type
VCL-06E32A20

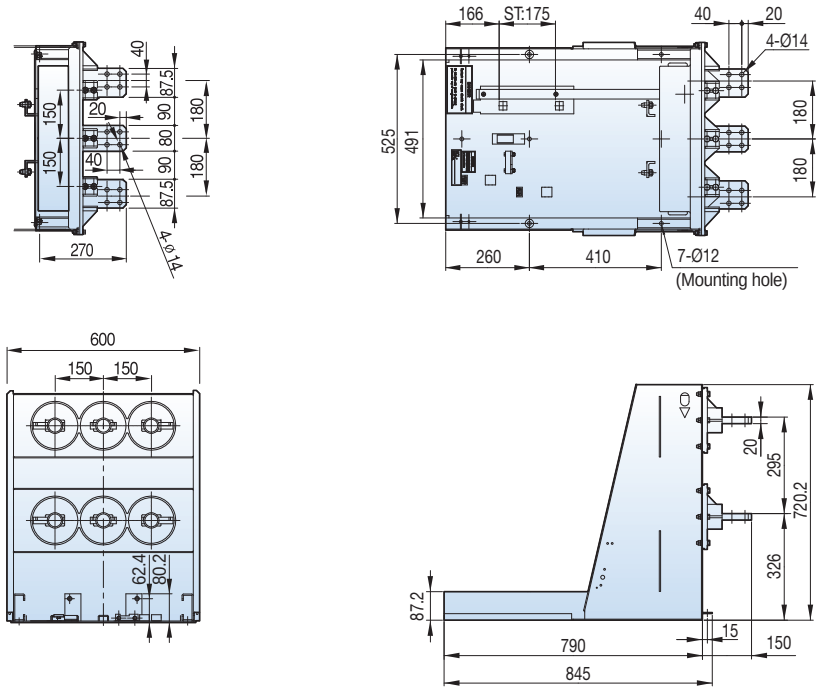

Dimensions - VL type (VL-06/12/17)

7.2kV, 31.5kA, 2000A

Withdrawable

■ F type cradle, phase distance 150mm

Type
VCL-06F32A20

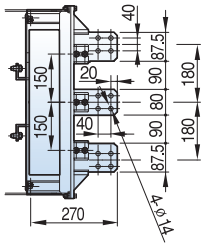

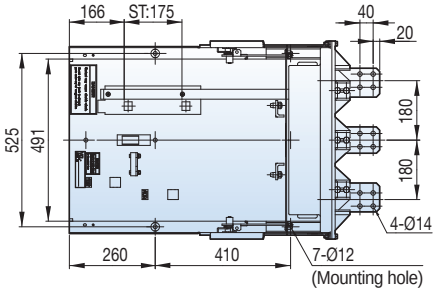

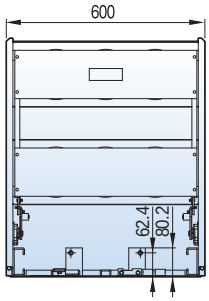

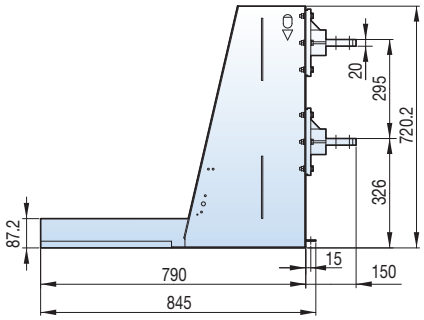

Withdrawable

■ G type cradle, phase distance 150mm

Type
VCL-06G32A20

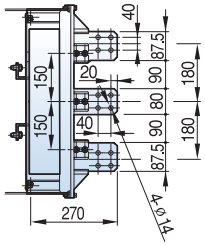

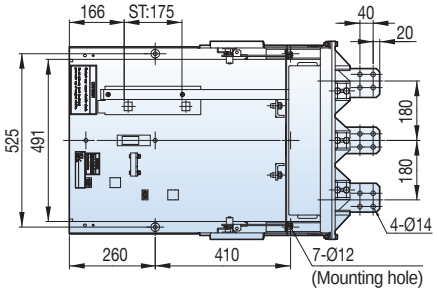

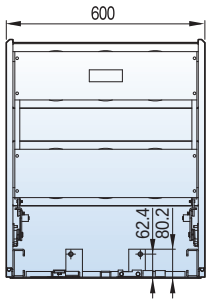

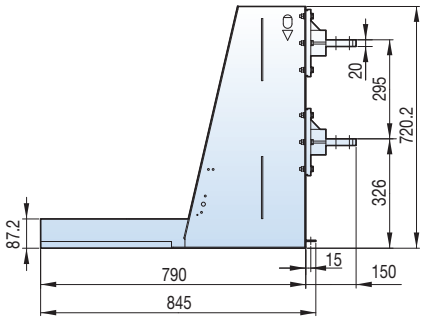

7.2kV, 31.5kA, 1250/2000A

Withdrawable

Type
VL-06Fs32A13
VL-06Fs32A20

■ Fs type unit, phase distance 150mm

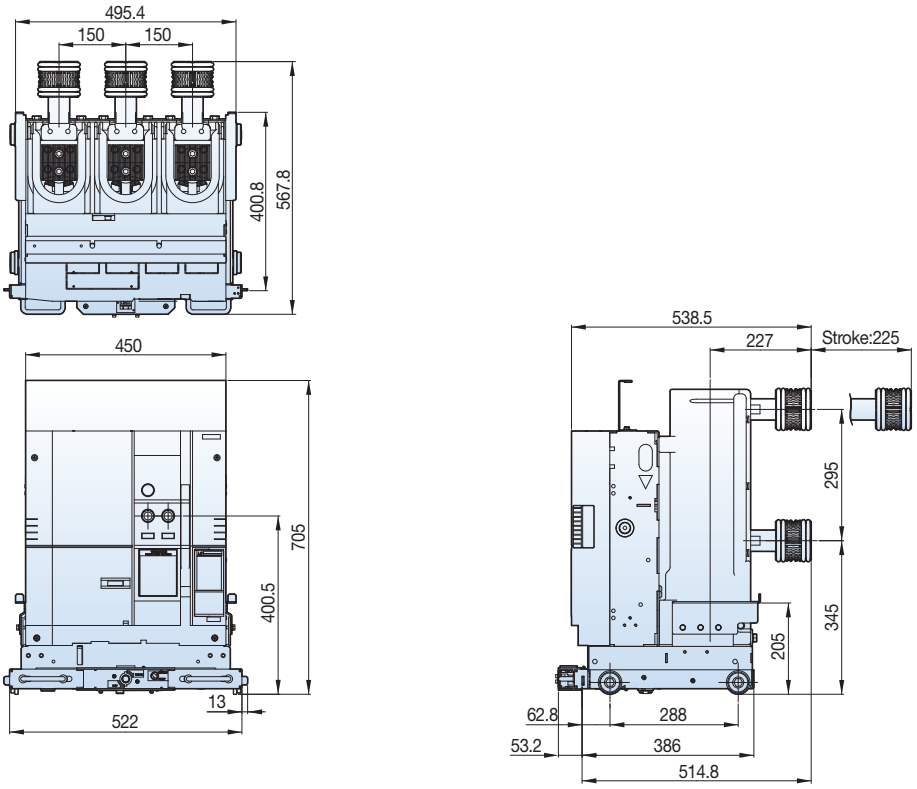

Withdrawable

Type
VCL-06Fs32A13
VCL-06Fs32A20

■ Fs type cradle, phase distance 150mm

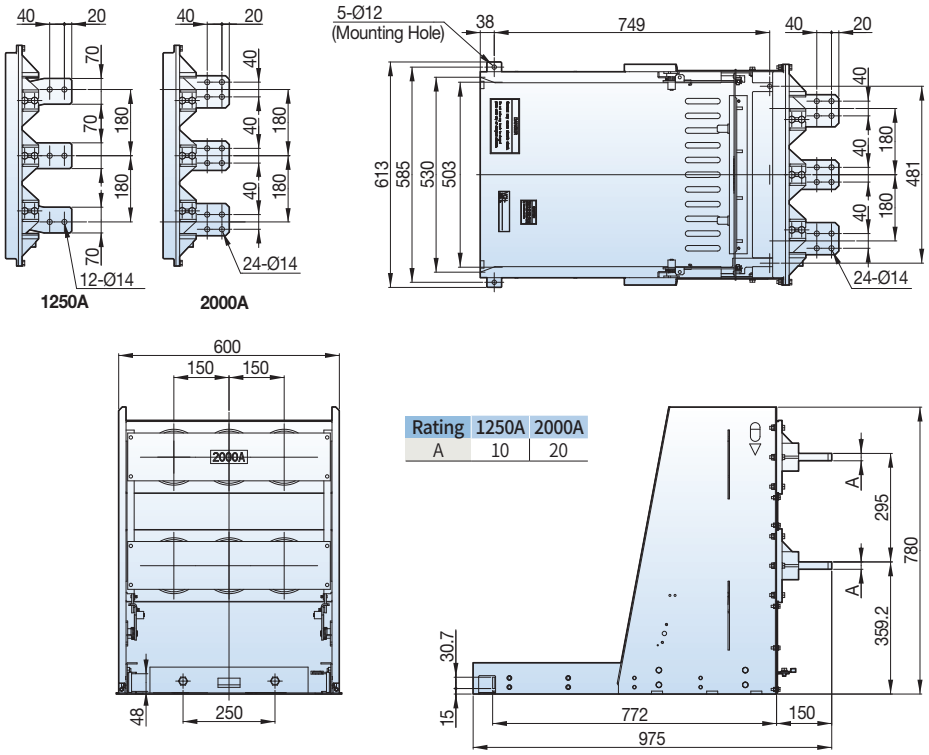

Dimensions - VL type (VL-06/12/17)

7.2kV, 31.5kA, 2000A

Withdrawable

■ K type unit T type, phase distance 150mm

Type
VL-06K32K20

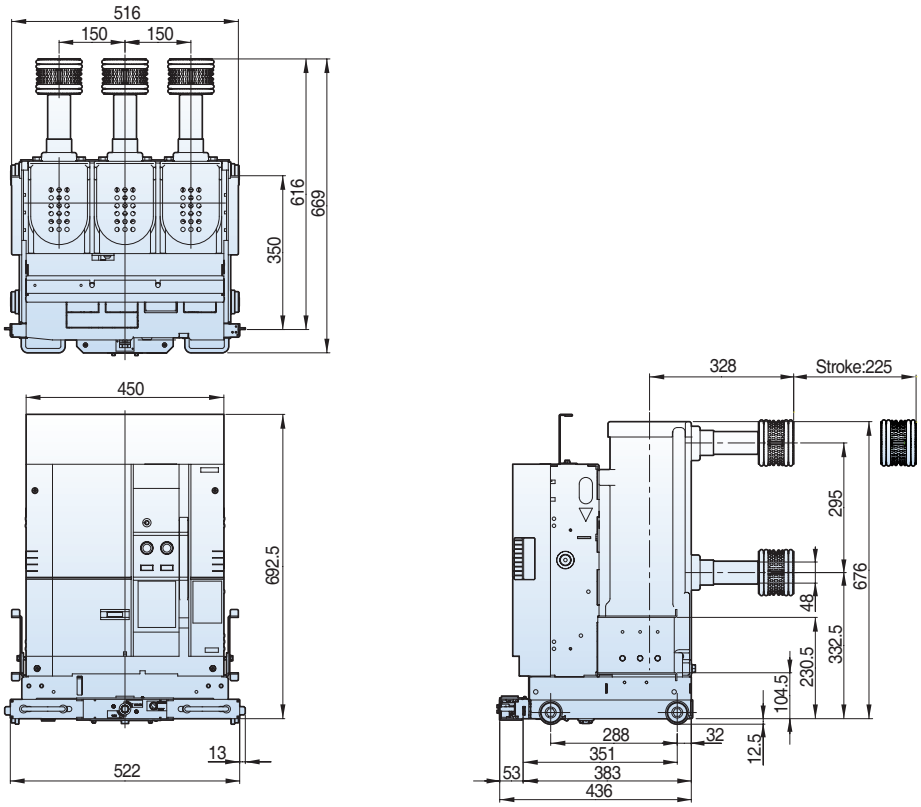

Withdrawable

■ K type unit T2 type, phase distance 150mm

Type
VL-06K32A20

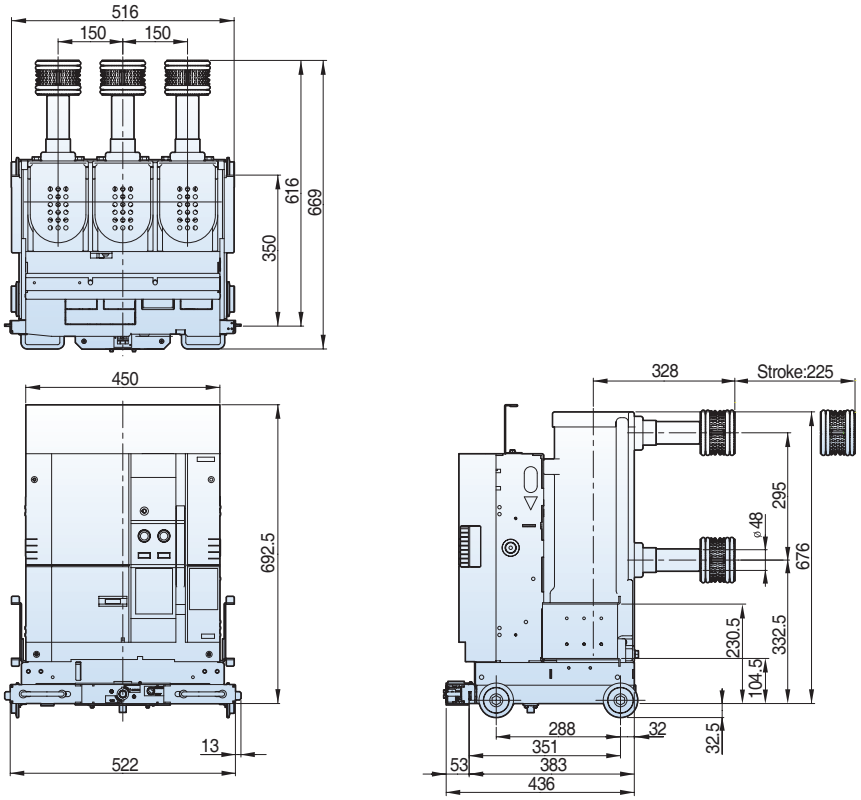

7.2kV, 31.5kA, 2000A

Withdrawable

■ MCSG cradle T type, phase distance 150mm

Type
VCL-06K32K20

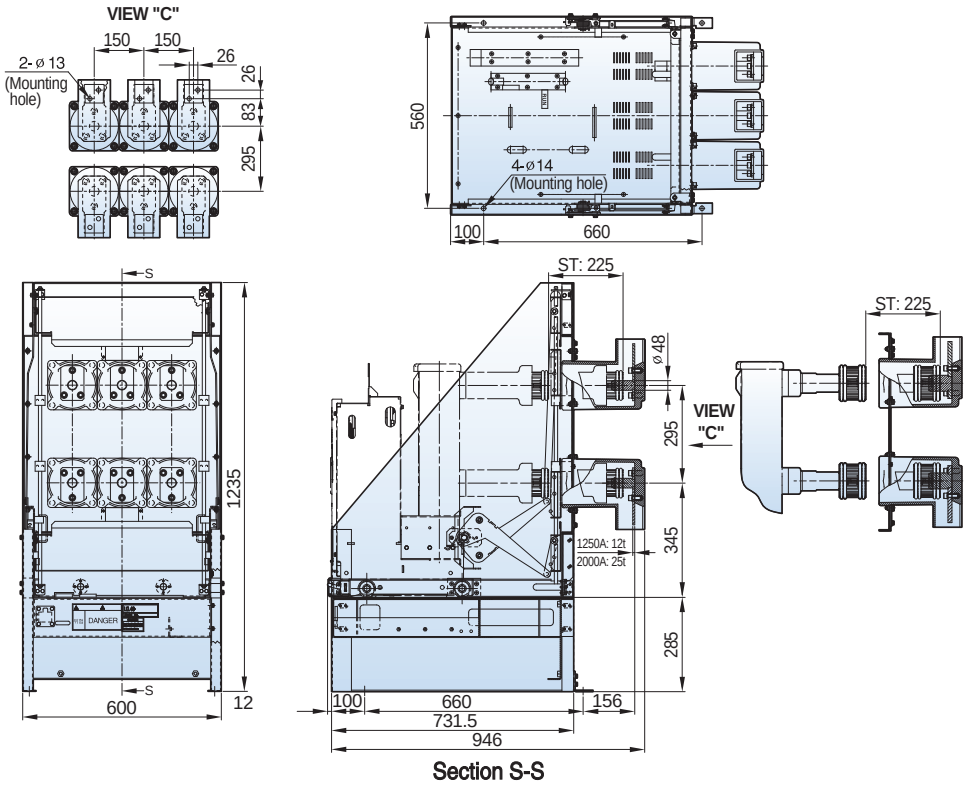

Withdrawable

■ MCSG cradle T2 type, phase distance 150mm

Type
VCL-06K32A20

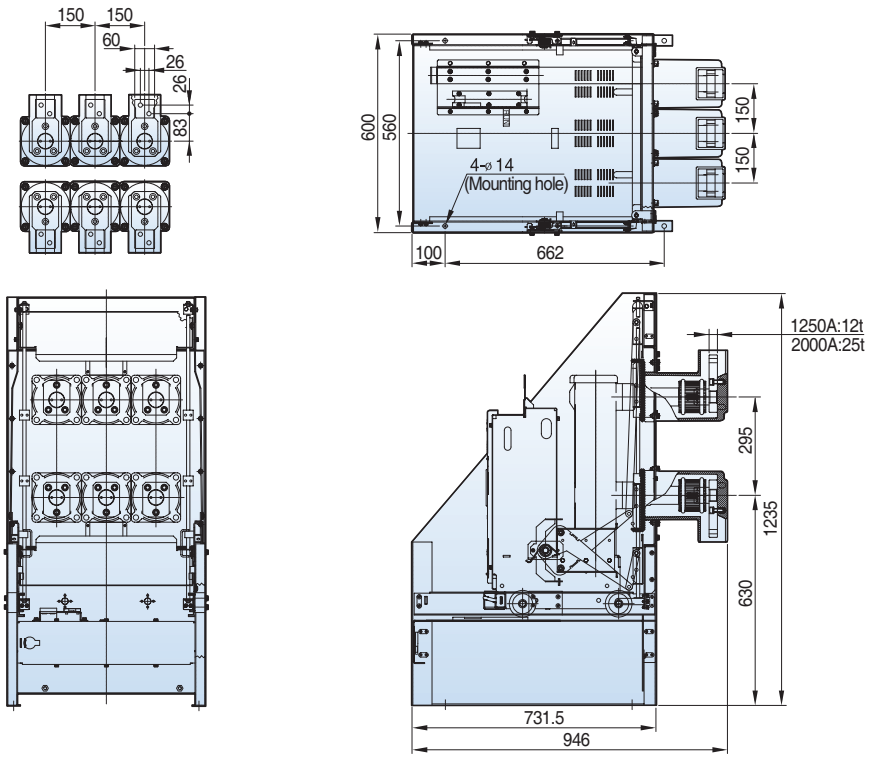

Dimensions - VL type (VL-06/12/17)

7.2kV, 31.5kA, 2000A

Withdrawable

Type
VL-06H32A20

■ H type unit, phase distance 150mm

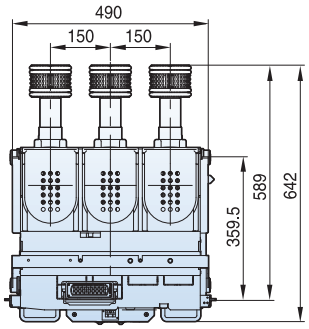

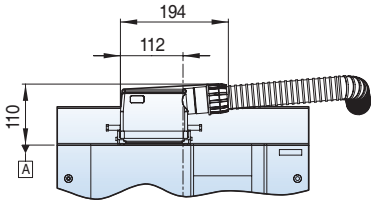

Note) Please be informed that When B-type connecter is used to design switchgears, the height can be 110mm higher based on "A"

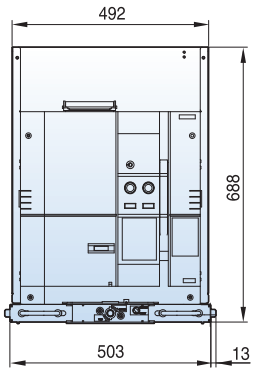

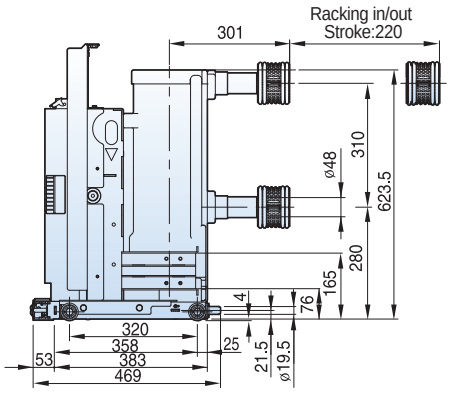

7.2kV, 31.5kA, 2000A

Withdrawable

Type
VCL-06Ha32A20

■ Ha type cradle, phase distance 150mm

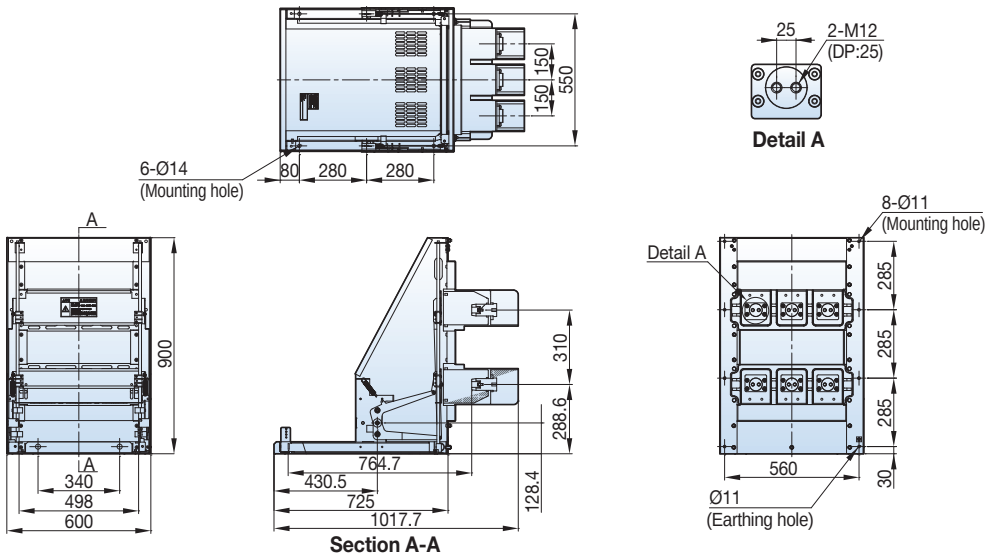

■ Ha type cradle, phase distance 150mm (Earthing S/W Option type)

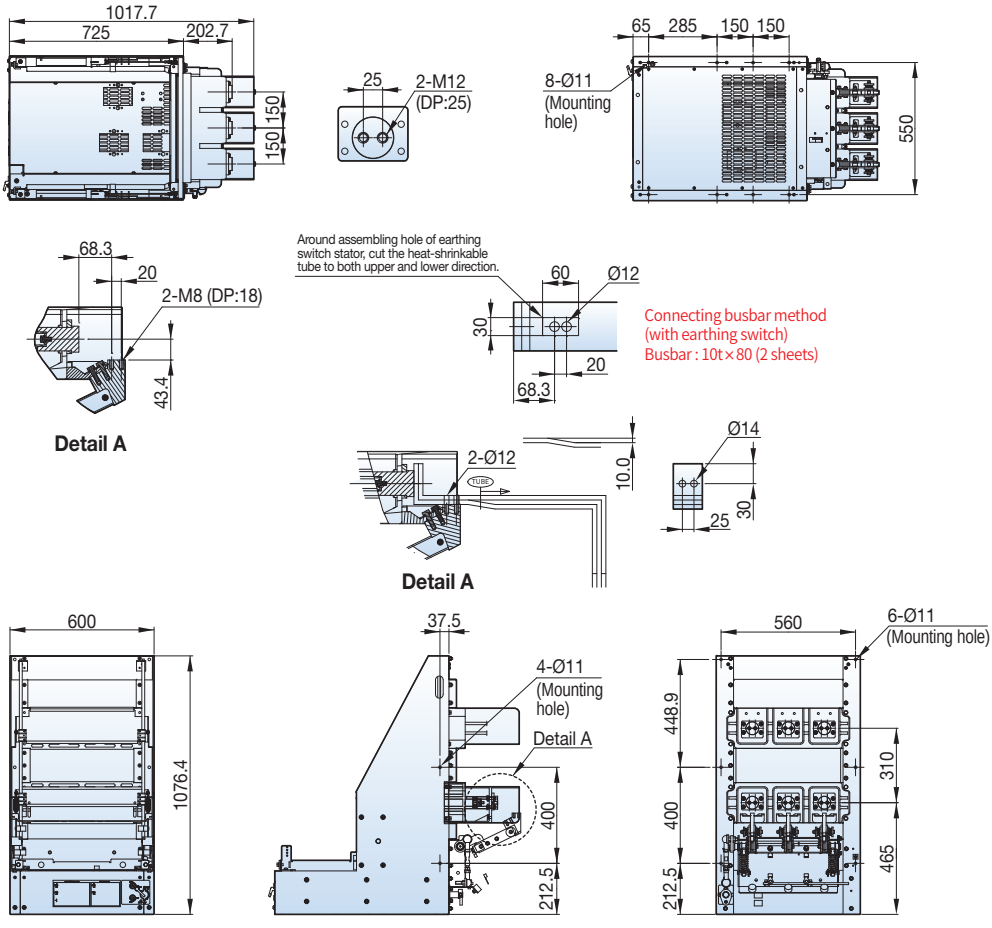

Dimensions - VL type (VL-06/12/17)

7.2kV, 31.5kA, 2000A

Withdrawable

Type
VCL-06H32A20

■ H type cradle, phase distance 150mm

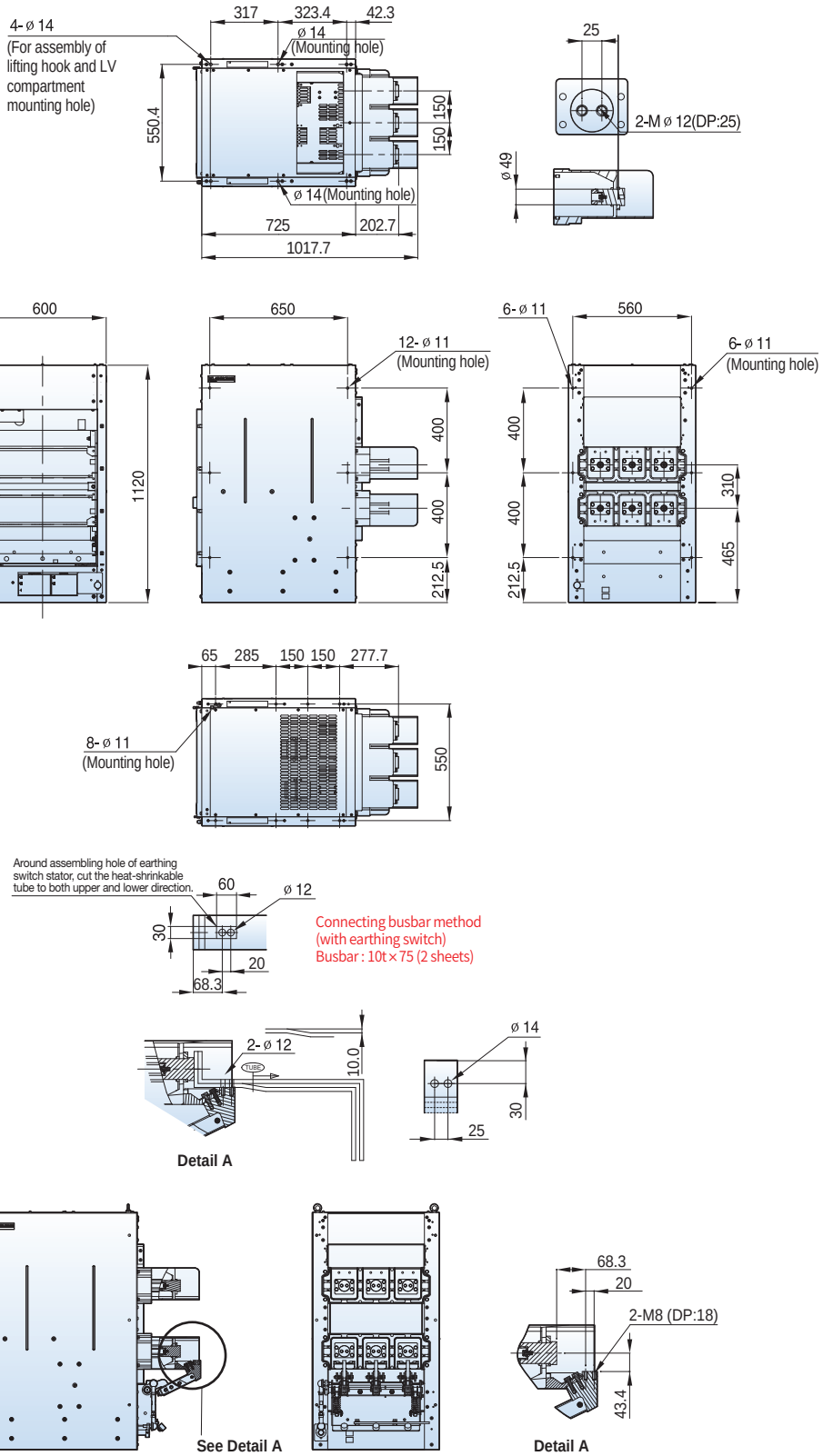

12/17.5kV, 20/25kA, 630/1250A

Fixed

■ P type, phase distance 150mm

Type
VL-12P20A06
VL-12P25A06
VL-12P20A13
VL-12P25A13
VL-17P20A06
VL-17P25A06
VL-17P20A13
VL-17P25A13

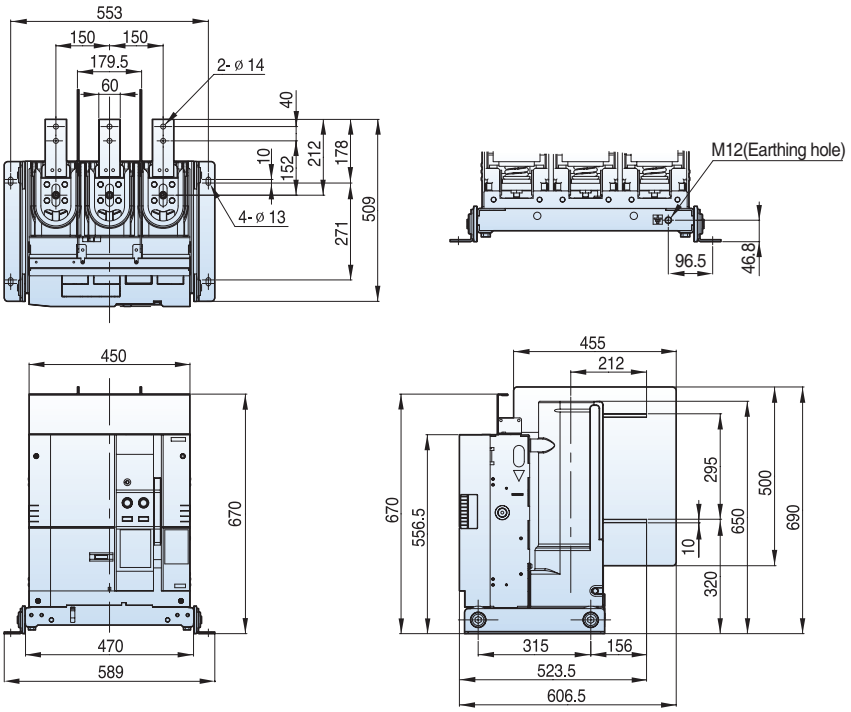

Fixed

■ P type, phase distance 210mm

Type
VL-12P20B06
VL-12P25B06
VL-12P20B13
VL-12P25B13
VL-17P20B06
VL-17P25B06
VL-17P20B13
VL-17P25B13

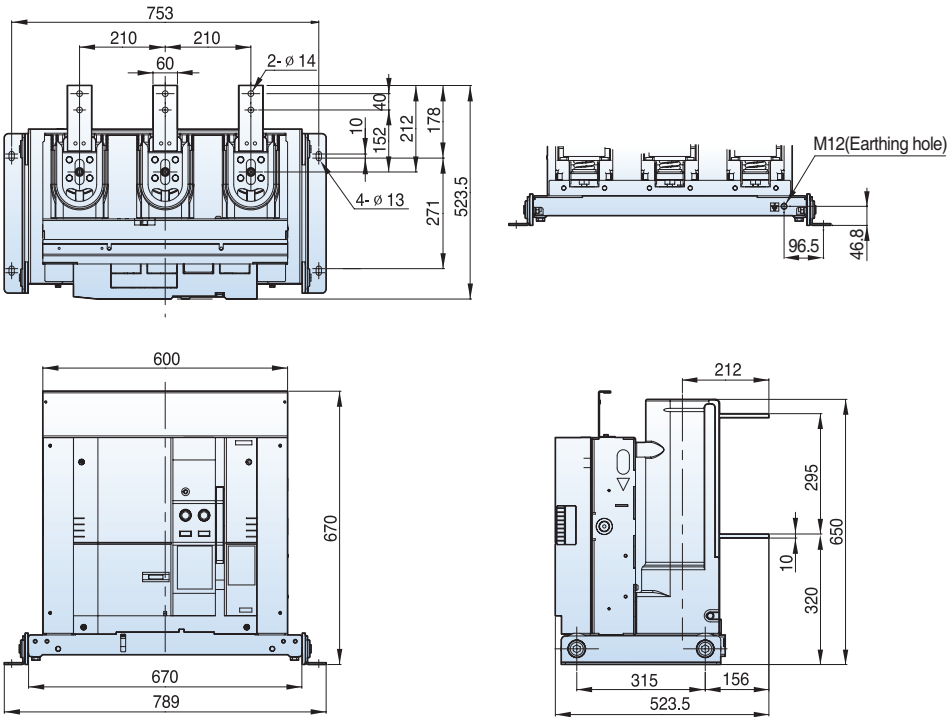

Dimensions - VL type (VL-06/12/17)

12/17.5kV, 20/25kA, 630/1250A

Withdrawable

■ Compatible with existing E type unit, phase distance 210mm

Type
VL-12E20F06
VL-12E25F06
VL-12E20F13
VL-12E25F13
VL-17E20F06
VL-17E25F06
VL-17E20F13
VL-17E25F13

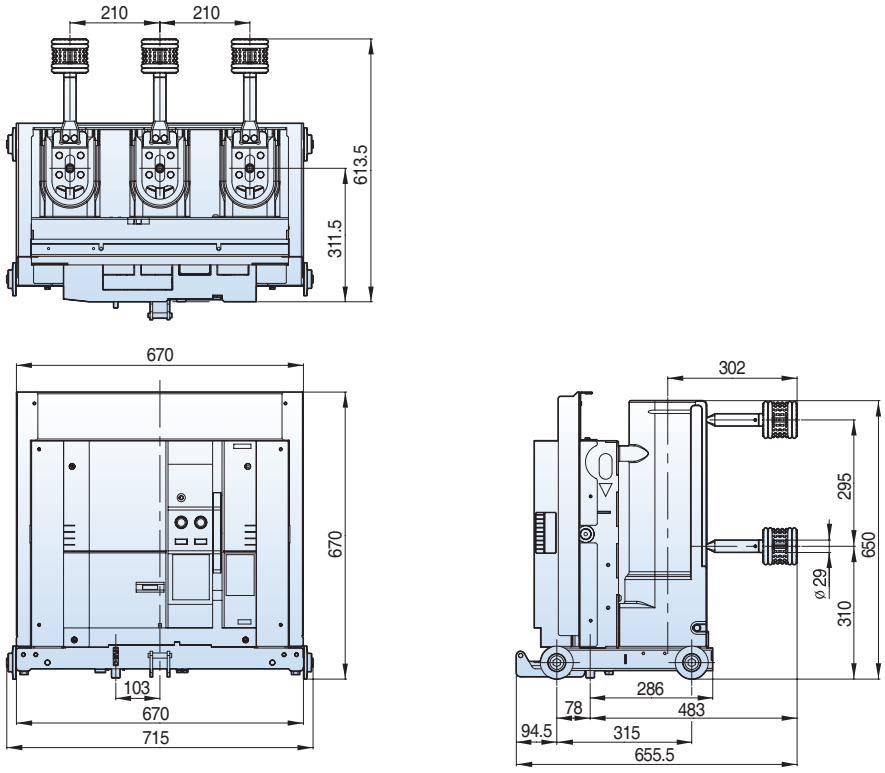

Withdrawable

■ Compatible with existing F type unit, phase distance 210mm

Type
VL-12F20F06
VL-12F25F06
VL-12F20F13
VL-12F25F13
VL-17F20F06
VL-17F25F06
VL-17F20F13
VL-17F25F13

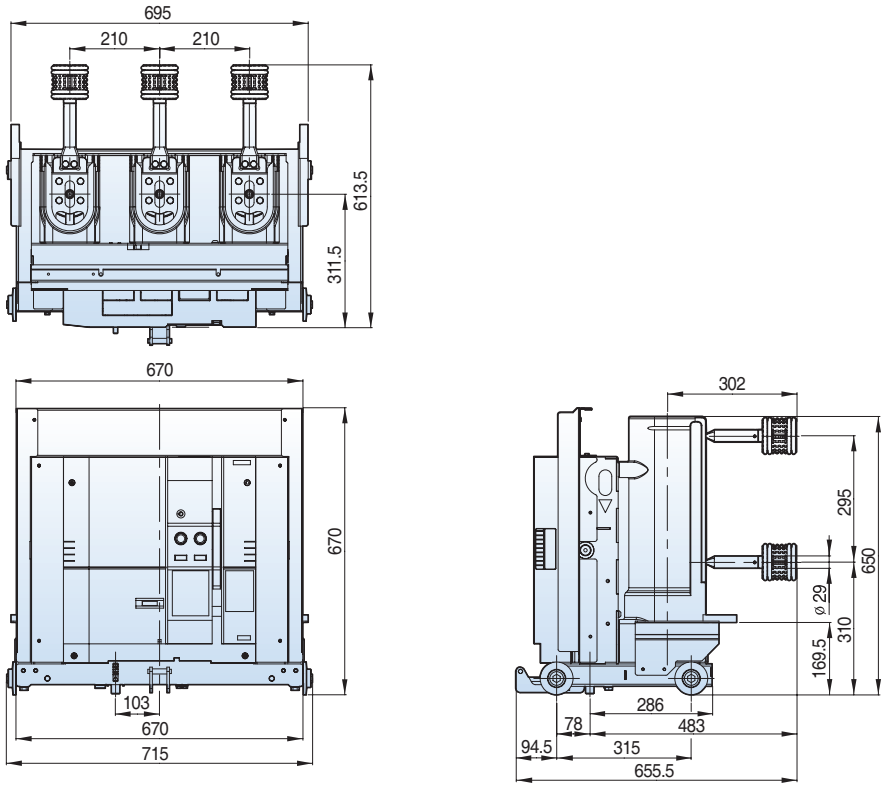

12/17.5kV, 20/25kA, 630/1250A

Withdrawable

■ E type unit, phase distance 210mm

Type
VL-12E20B06
VL-12E25B06
VL-12E20B13
VL-12E25B13
VL-17E20B06
VL-17E25B06
VL-17E20B13
VL-17E25B13

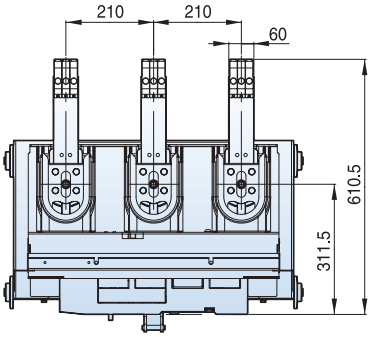

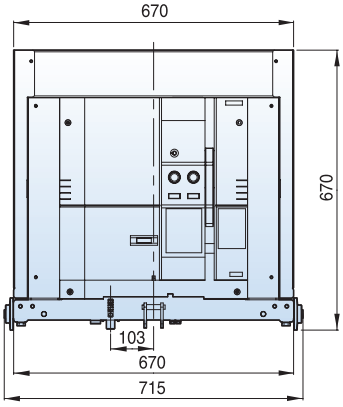

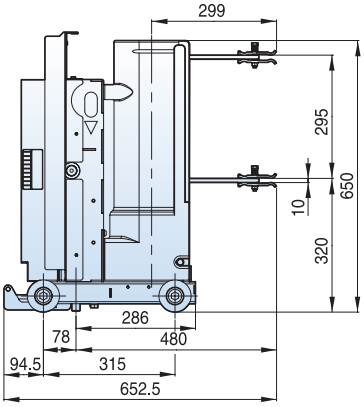

Withdrawable

■ F type unit, phase distance 210mm

Type
VL-12F20B06
VL-12F25B06
VL-12F20B13
VL-12F25B13
VL-17F20B06
VL-17F25B06
VL-17F20B13
VL-17F25B13

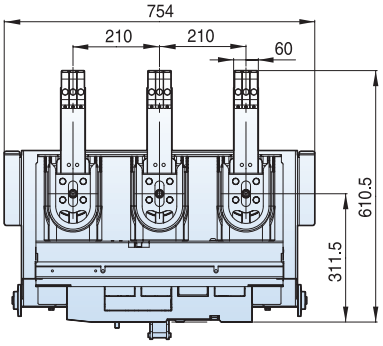

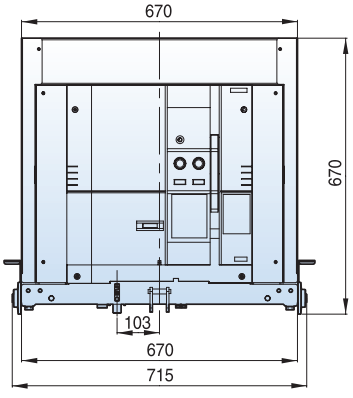

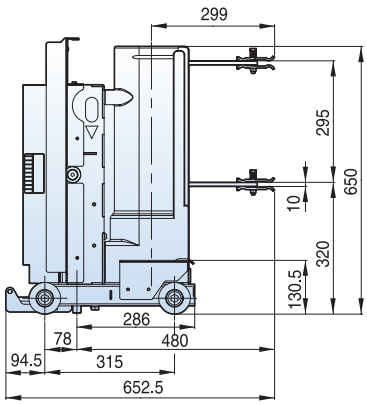

Dimensions - VL type (VL-06/12/17)

12kV, 20/25kA, 630/1250A

Withdrawable

■ K type unit T type, phase distance 150mm

Type
VL-12K20K06
VL-12K25K06
VL-12K20K13
VL-12K25K13

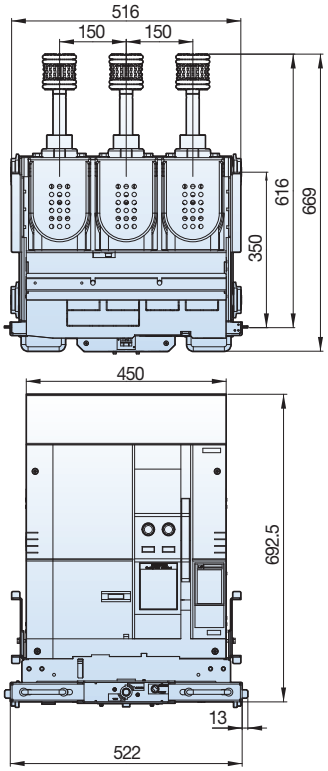

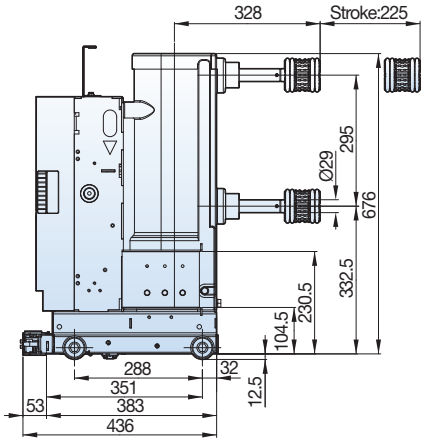

Withdrawable

■ K type unit T2 type, phase distance 150mm

Type
VL-12K20A06
VL-12K25A06
VL-12K20A13
VL-12K25A13

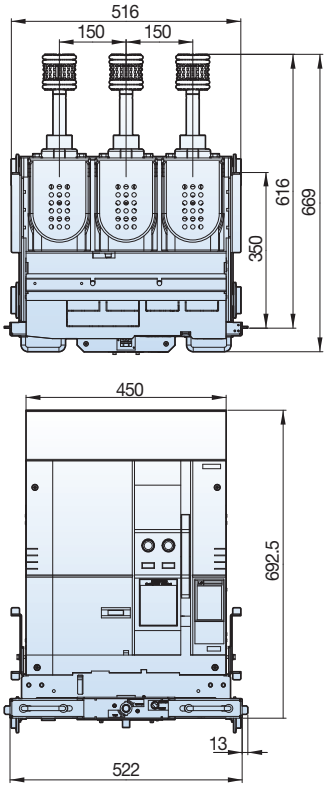

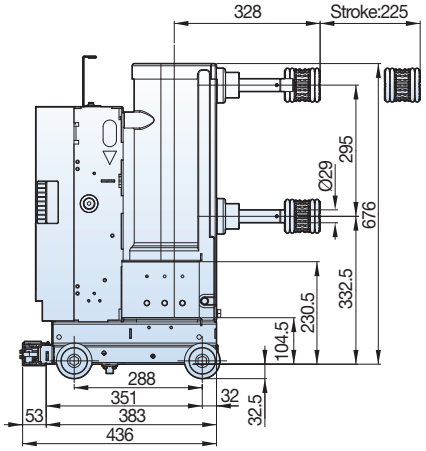

12/17.5kV, 20/25kA, 630A

Withdrawable

Type
VCL-12E20F06
VCL-12E25F06
VCL-17E20F06
VCL-17E25F06

■ Compatible with existing E cradle, phase distance 210mm

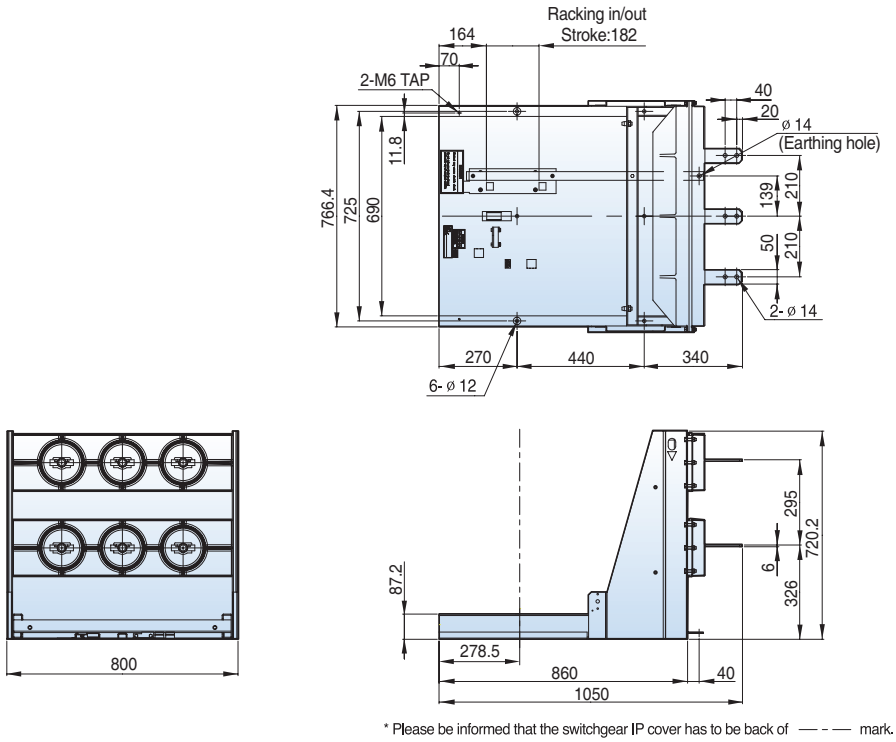

* Please be informed that the switchgear IP cover has to be back of — - — mark.

12/17.5kV, 20/25kA, 630A

Withdrawable

Type
VCL-12E20F13
VCL-12E25F13
VCL-17E20F13
VCL-17E25F13

■ Compatible with existing E cradle, phase distance 210mm

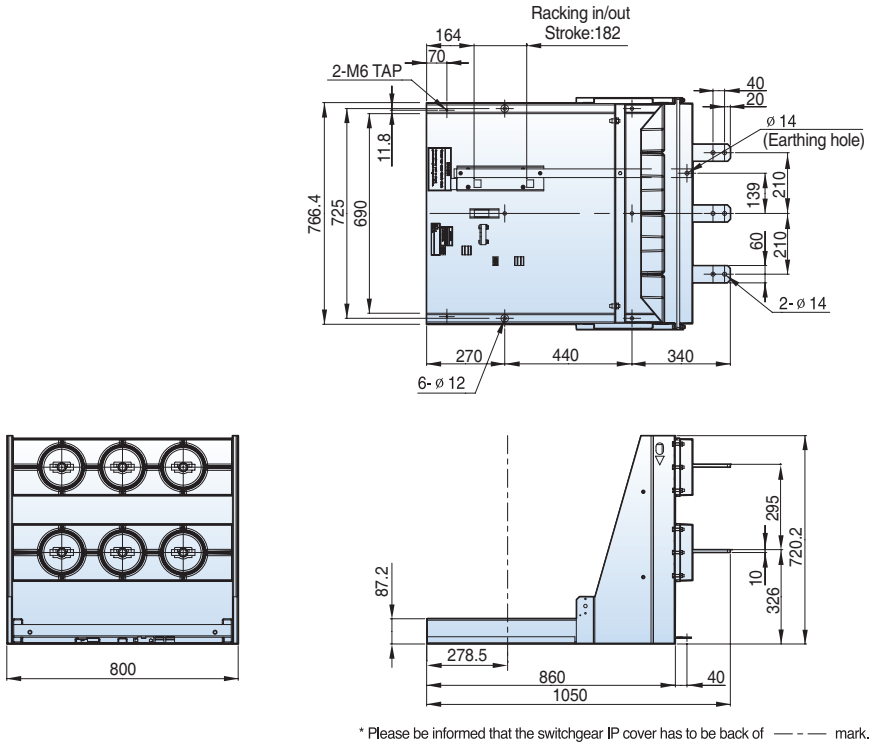

* Please be informed that the switchgear IP cover has to be back of — - — mark.

Dimensions - VL type (VL-06/12/17)

12/17.5kV, 20/25kA, 630A

Withdrawable

Type
VCL-12F20F06
VCL-12F25F06
VCL-17F20F06
VCL-17F25F06

■ Compatible with existing F cradle, phase distance 210mm

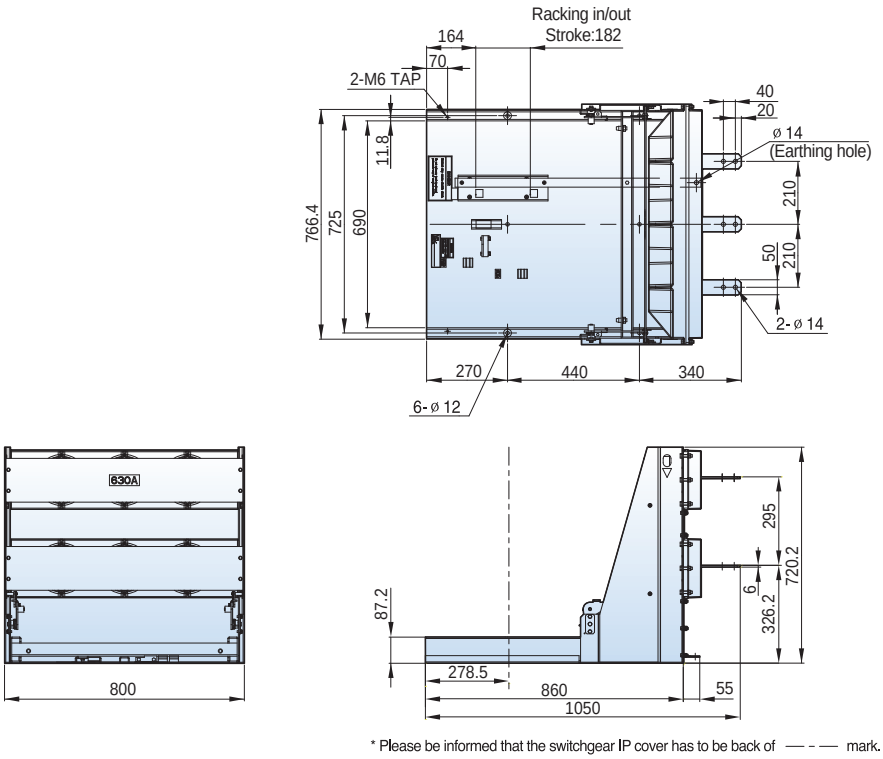

* Please be informed that the switchgear IP cover has to be back of —·— mark.

12/17.5kV, 20/25kA, 1250A

Withdrawable

Type
VCL-12F20F13
VCL-12F25F13
VCL-17F20F13
VCL-17F25F13

■ Compatible with existing F cradle, phase distance 210mm

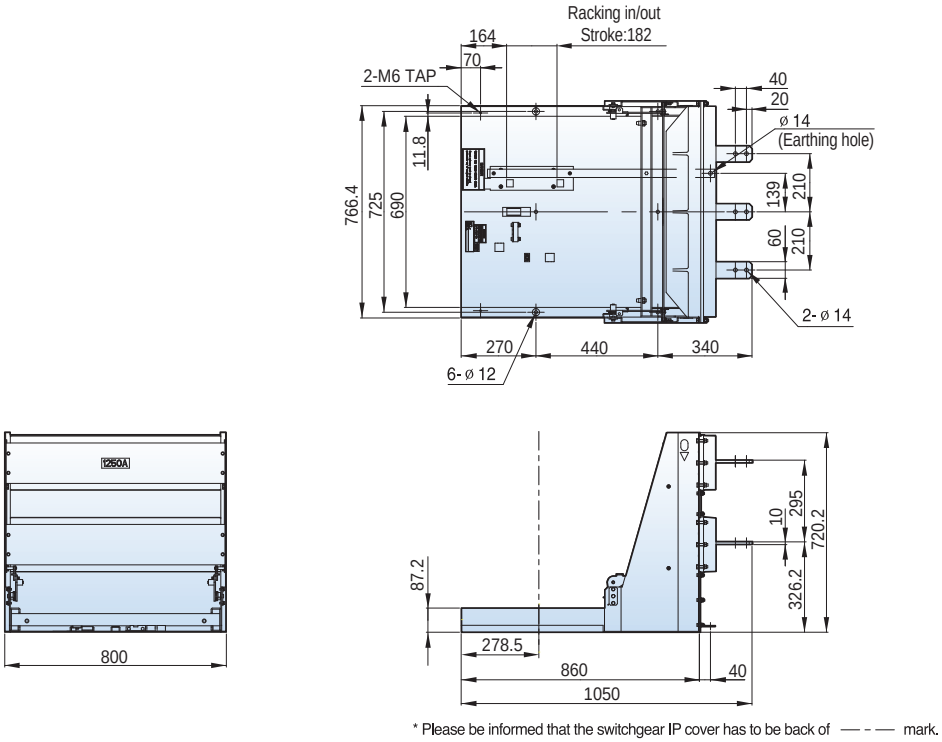

* Please be informed that the switchgear IP cover has to be back of —·— mark.

12/17.5kV, 20/25kA, 630/1250A

Withdrawable

■ E type cradle, phase distance 210mm

Type
VCL-12E20B06
VCL-12E25B06
VCL-12E20B13
VCL-12E25B13
VCL-17E20B06
VCL-17E25B06
VCL-17E20B13
VCL-17E25B13

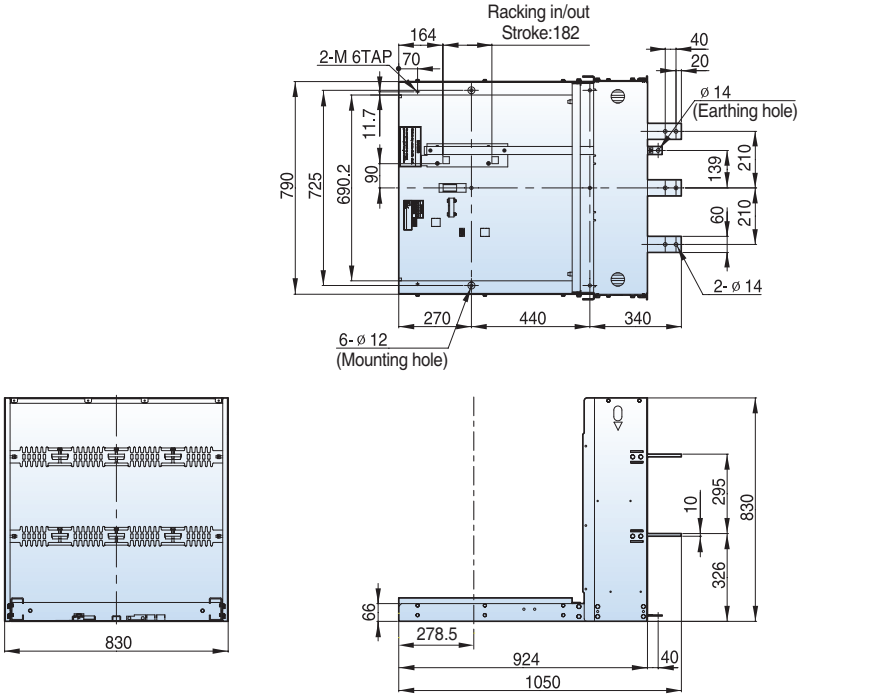

* Please be informed that the switchgear IP cover has to be back of — - — mark.

Withdrawable

■ F type cradle, phase distance 210mm

Type
VCL-12F20B06
VCL-12F25B06
VCL-12F20B13
VCL-12F25B13
VCL-17F20B06
VCL-17F25B06
VCL-17F20B13
VCL-17F25B13

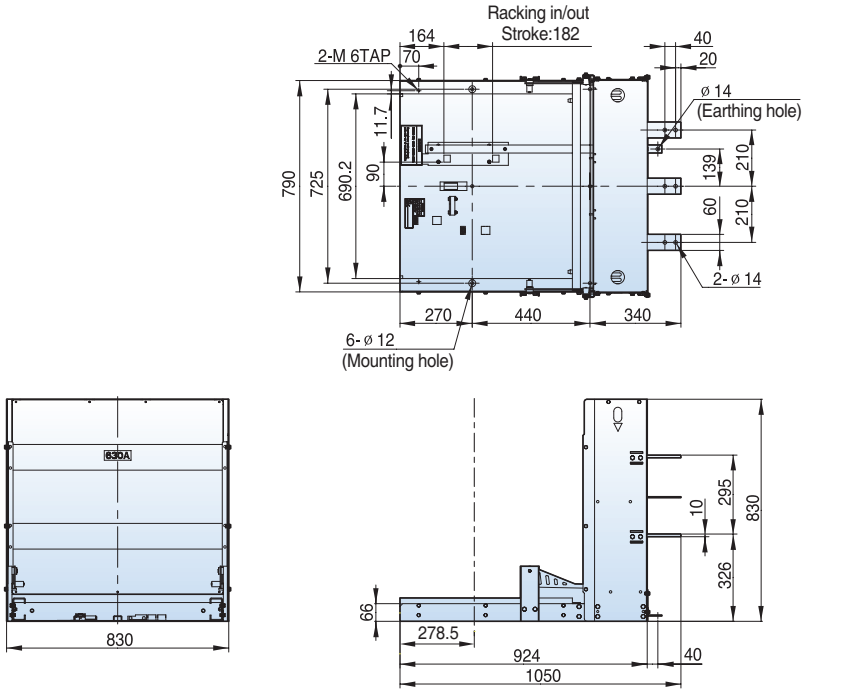

* Please be informed that the switchgear IP cover has to be back of — - — mark.

Dimensions - VL type (VL-06/12/17)

12/17.5kV, 20/25kA, 630/1250A

Withdrawable

■ H type unit, phase distance 150mm

Type
VL-12H20A06
VL-12H25A06
VL-12H20A13
VL-12H25A13
VL-17H20A06
VL-17H25A06
VL-17H20A13
VL-17H25A13

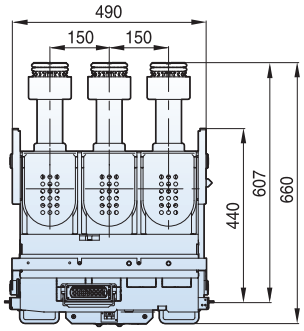

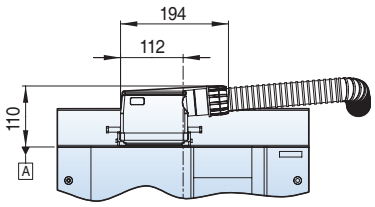

Note) Please be informed that When B-type connecter is used to design switchgears, the height can be 110mm higher based on "A"

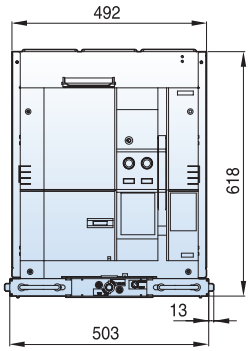

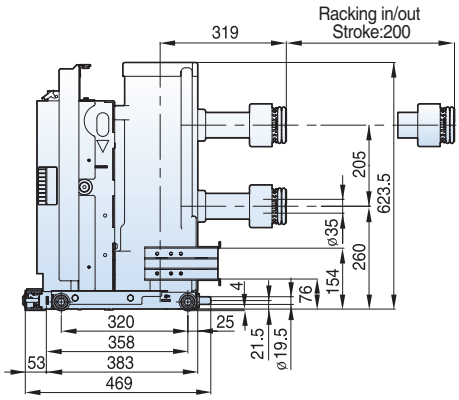

Withdrawable

■ H type unit, phase distance 210mm

Type
VL-12H20B06
VL-12H25B06
VL-12H20B13
VL-12H25B13
VL-17H20B06
VL-17H25B06
VL-17H20B13
VL-17H25B13

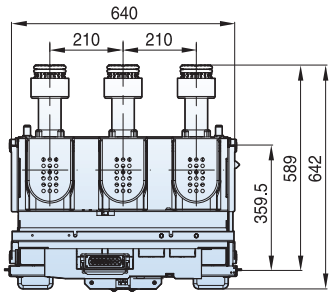

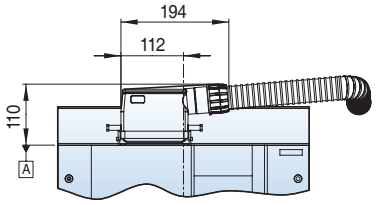

Note) Please be informed that When B-type connecter is used to design switchgears, the height can be 110mm higher based on "A"

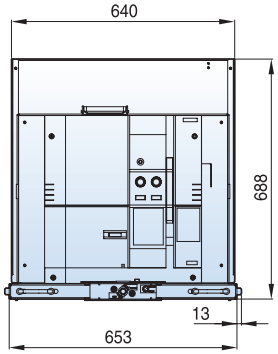

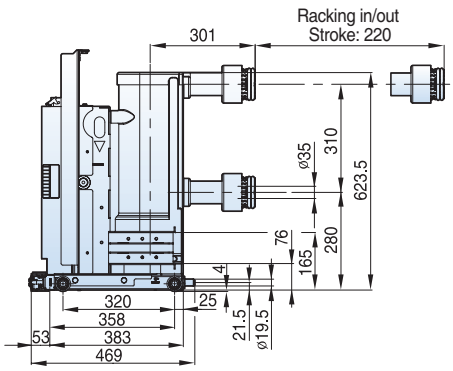

12/17.5kV, 20/25kA, 630/1250A

Withdrawable

Type
VCL-12H20A06
VCL-12H25A06
VCL-12H20A13
VCL-12H25A13
VCL-17H20A06
VCL-17H25A06
VCL-17H20A13
VCL-17H25A13

■ H type cradle, phase distance 150mm

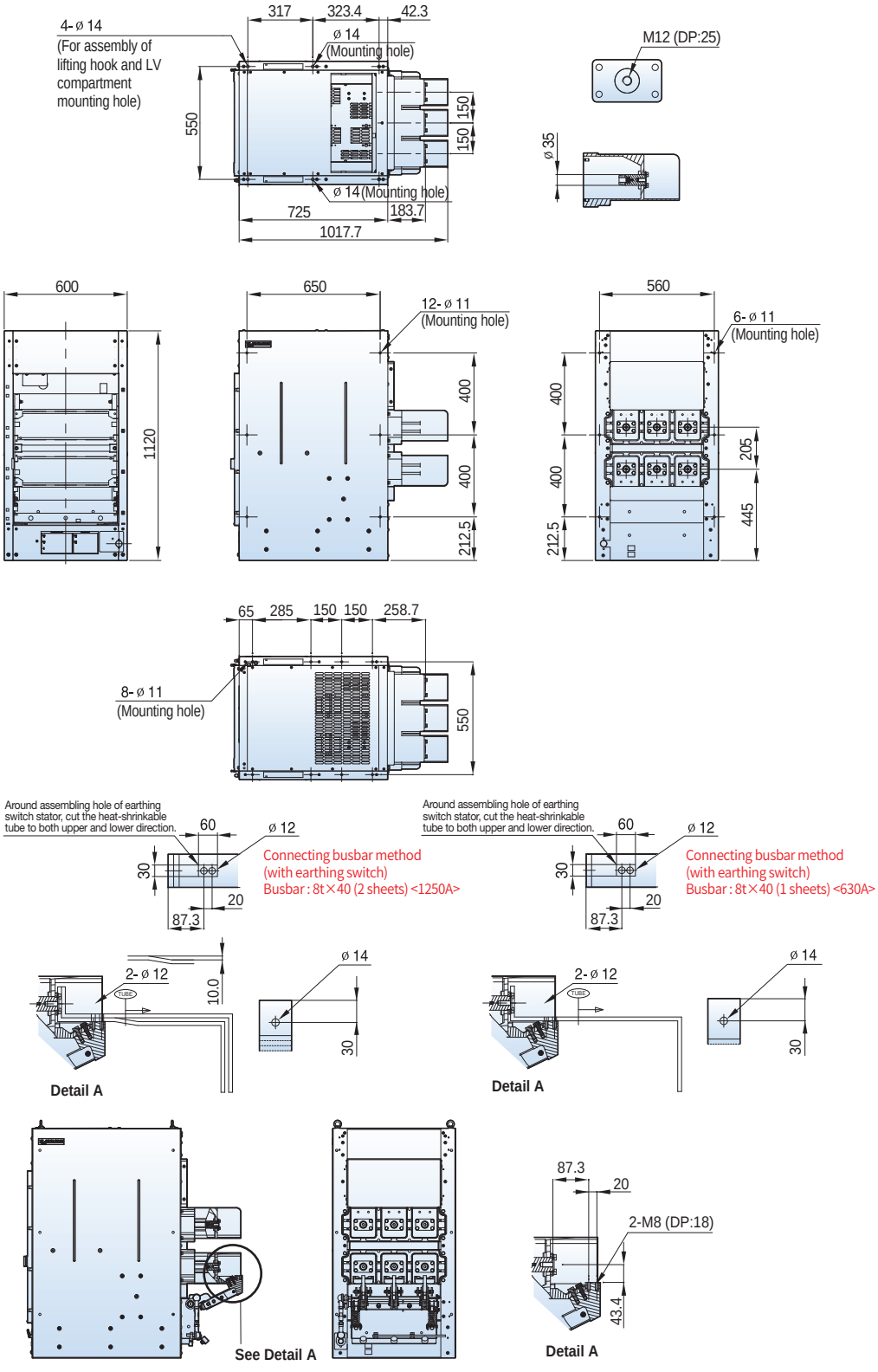

Dimensions - VL type (VL-06/12/17)

12/17.5kV, 20/25kA, 630/1250A

Withdrawable

Type
VCL-12H20B06
VCL-12H25B06
VCL-12H20B13
VCL-12H25B13
VCL-17H20B06
VCL-17H25B06
VCL-17H20B13
VCL-17H25B13

■ H type cradle, phase distance 210mm

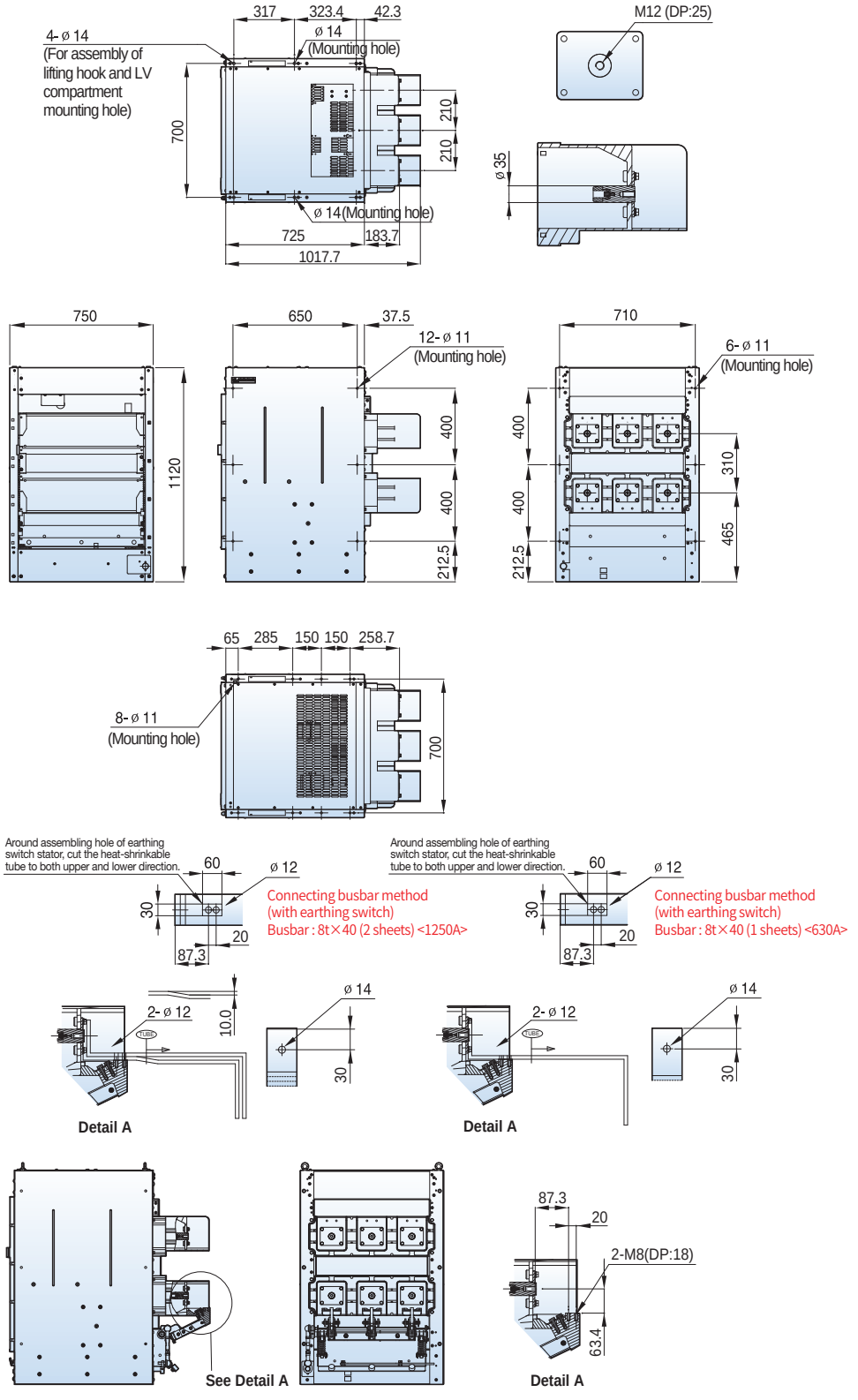

12/17.5kV, 20/25kA, 2000A

Fixed

Type
VL-12P20B20
VL-12P25B20
VL-17P20B20
VL-17P25B20

■ P type, phase distance 210mm

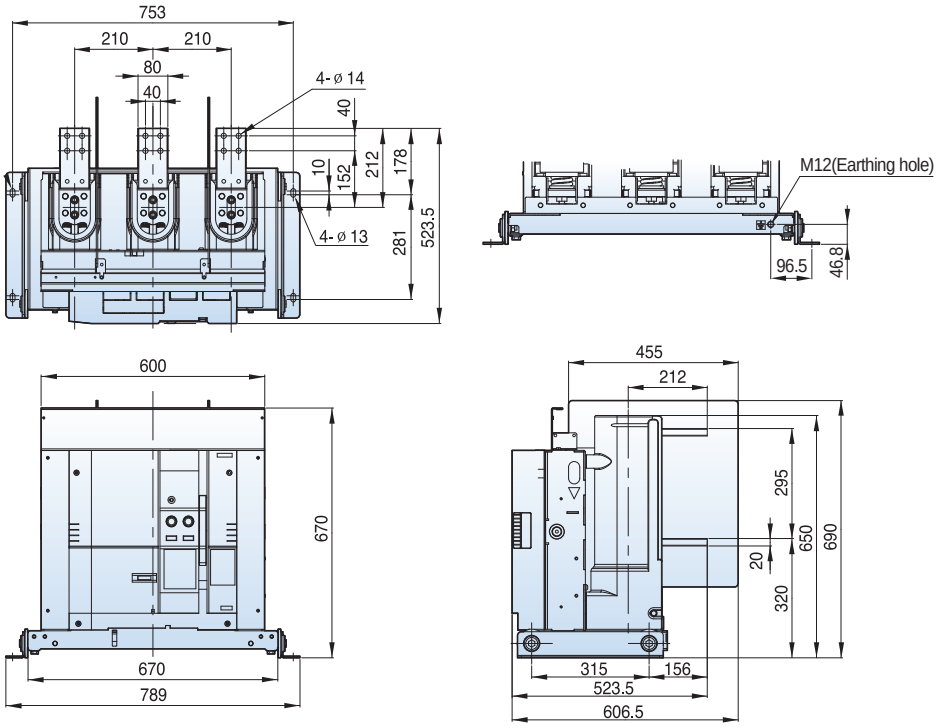

Withdrawable

Type
VL-12E20B20
VL-12E25B20
VL-17E20B20
VL-17E25B20

■ E type unit, phase distance 210mm

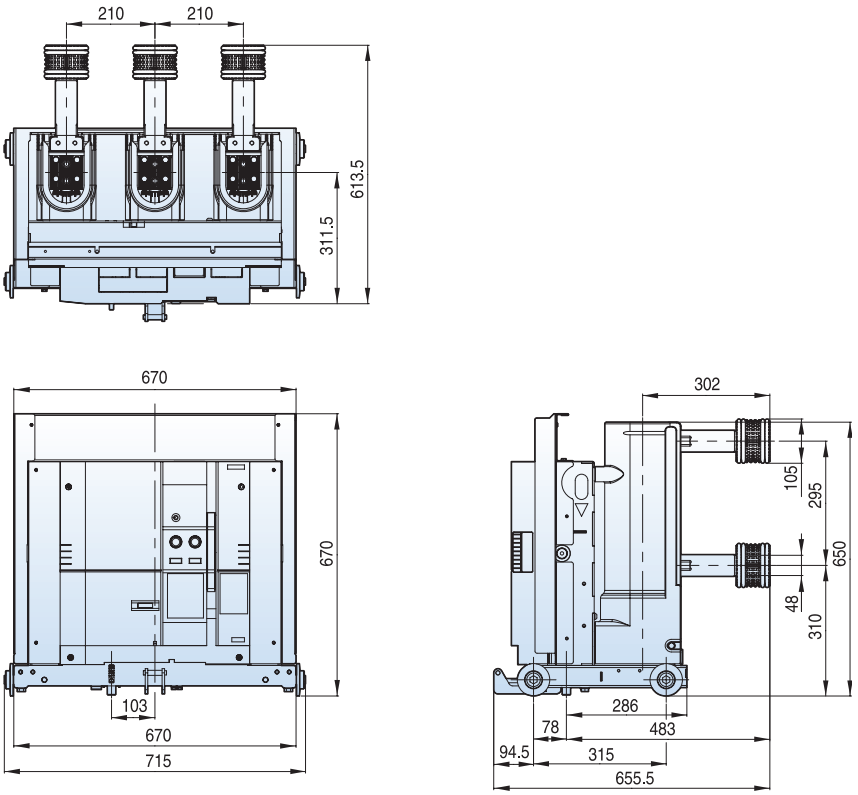

Dimensions - VL type (VL-06/12/17)

12/17.5kV, 20/25kA, 2000A

Withdrawable

■ F type unit, phase distance 210mm

Type
VL-12F20B20
VL-12F25B20
VL-17F20B20
VL-17F25B20

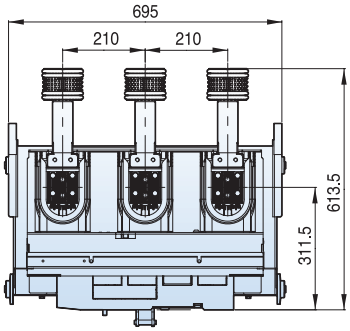

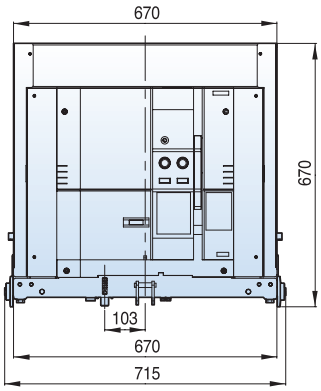

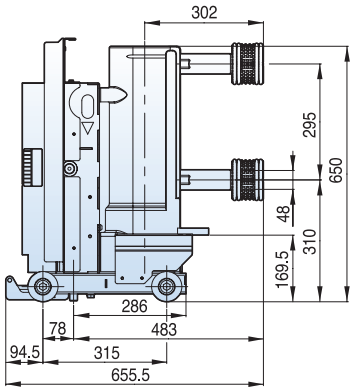

Withdrawable

■ E type cradle, phase distance 210mm

Type
VCL-12E20B20
VCL-12E25B20
VCL-17E20B20
VCL-17E25B20

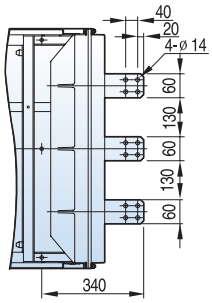

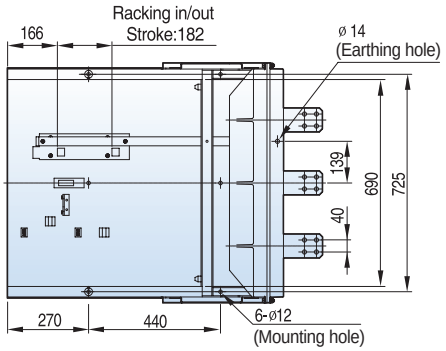

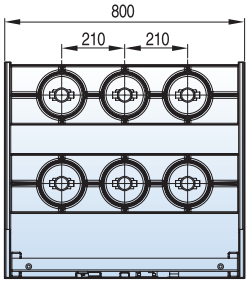

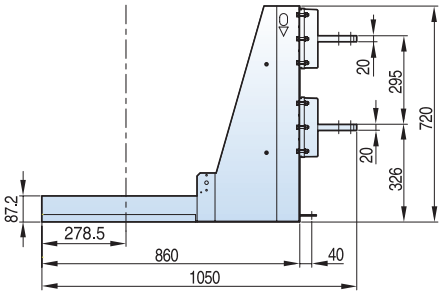

* Please be informed that the switchgear IP cover has to be back of — - - — mark.

12/17.5kV, 20/25kA, 2000A

Withdrawable

Type
VCL-12F20B20
VCL-12F25B20
VCL-17F20B20
VCL-17F25B20

■ F type cradle, phase distance 210mm

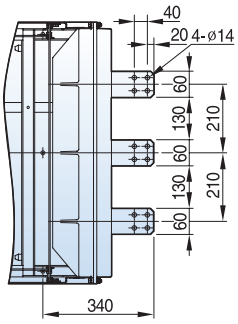

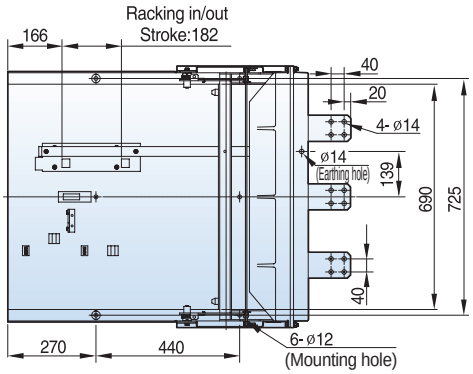

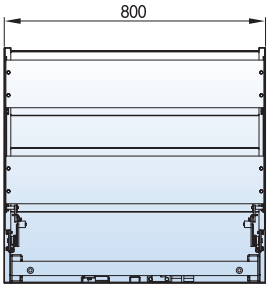

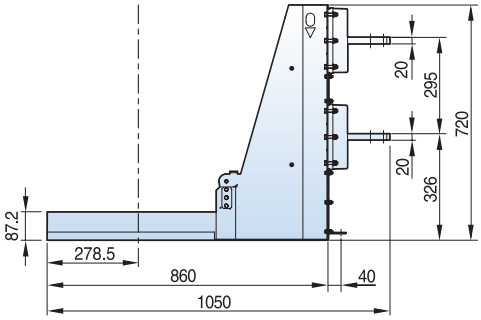

* Please be informed that the switchgear IP cover has to be back of —·— mark.

Dimensions - VL type (VL-06/12/17)

12/17.5kV, 20/25kA, 2000A

Withdrawable

■ H type unit, phase distance 150mm

Type
VL-12H20A20
VL-12H25A20
VL-17H20A20
VL-17H25A20

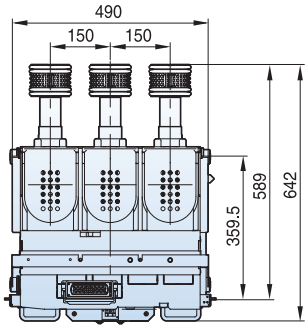

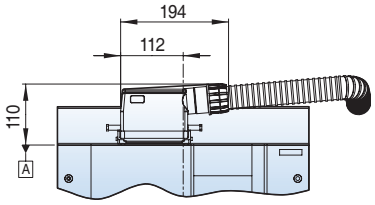

Note) Please be informed that When B-type connecter is used to design switchgears, the height can be 110mm higher based on "A"

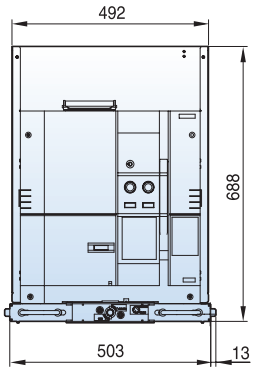

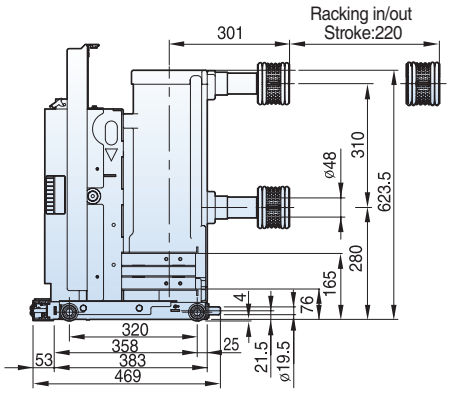

Withdrawable

■ H type unit, phase distance 210mm

Type
VL-12H20B20
VL-12H25B20
VL-17H20B20
VL-17H25B20

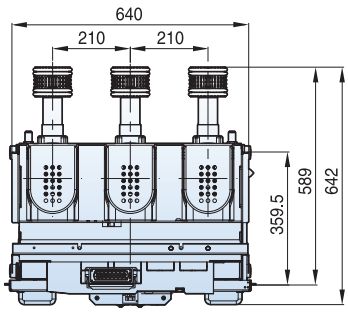

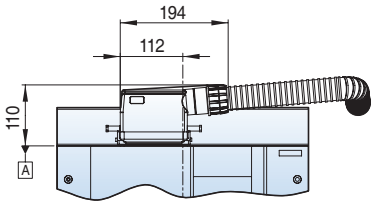

Note) Please be informed that When B-type connecter is used to design switchgears, the height can be 110mm higher based on "A"

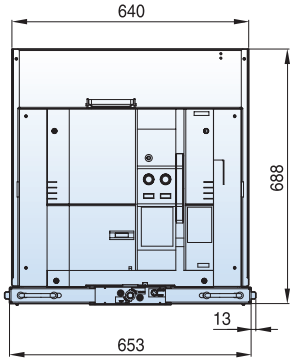

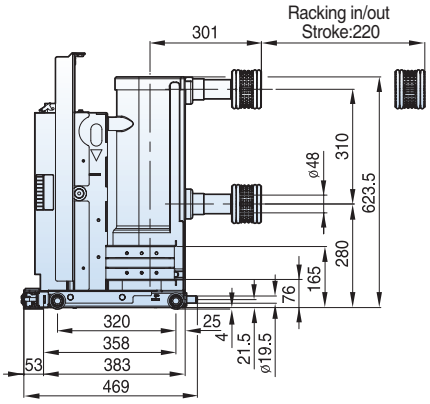

12kV, 20/25kA, 2000A

Withdrawable

Type
VCL-12Ha20A20
VCL-12Ha25A20

■ Ha type cradle, phase distance 150mm

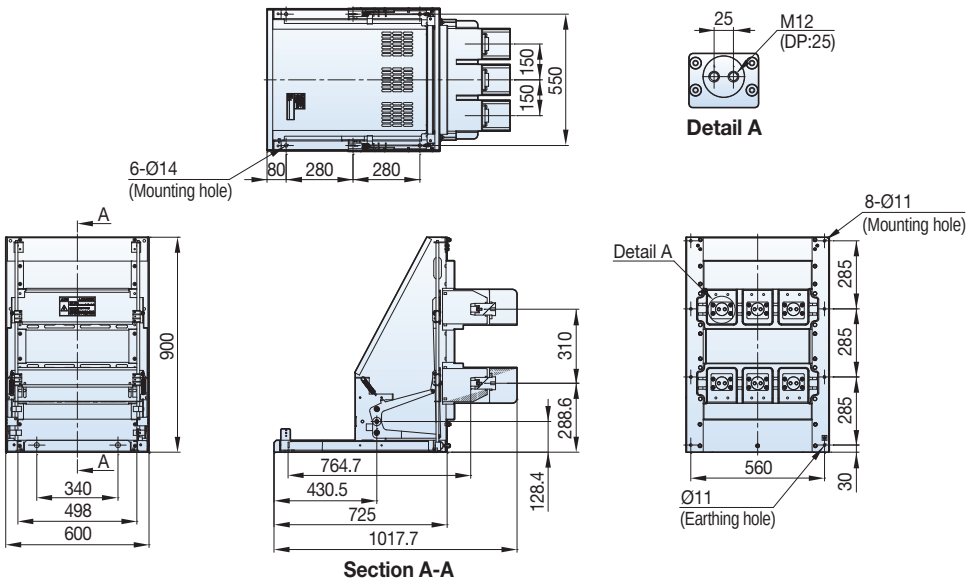

■ Ha type cradle, phase distance 150mm (Earthing S/W Option type)

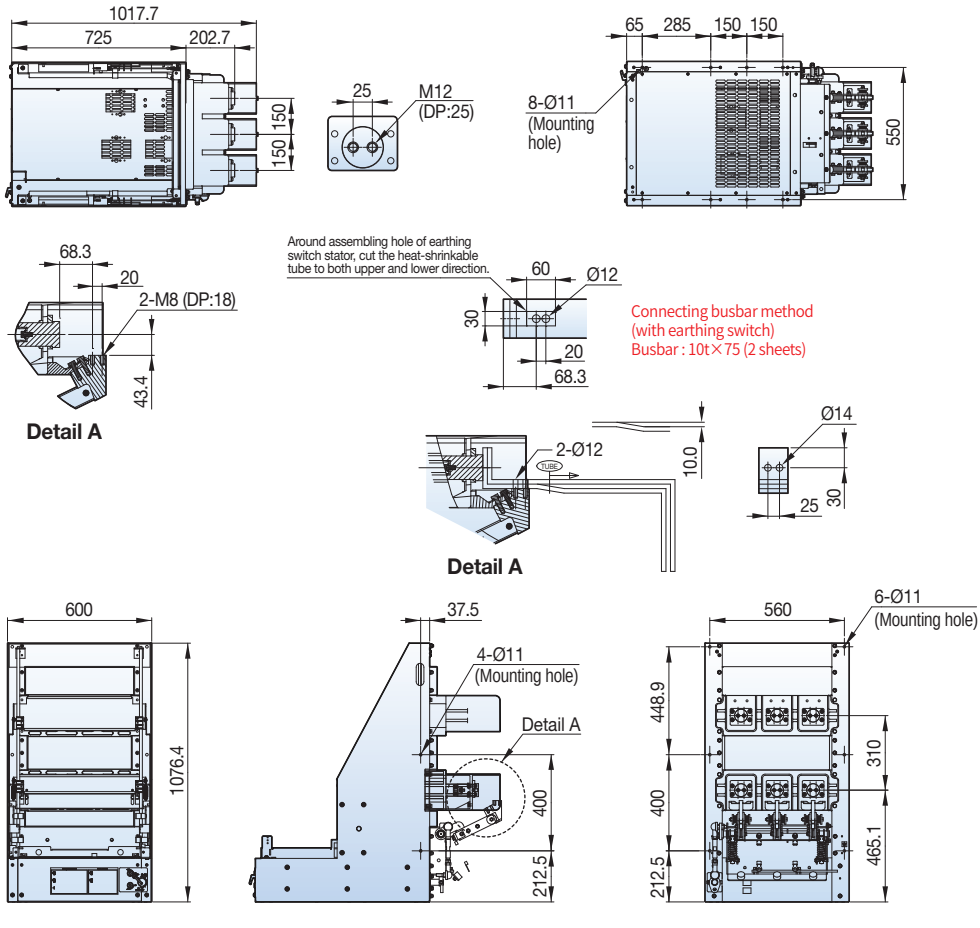

Dimensions - VL type (VL-06/12/17)

12/17.5kV, 20/25kA, 2000A

Withdrawable

Type
VCL-12H20A20
VCL-12H25A20
VCL-17H20A20
VCL-17H25A20

■ H type cradle, phase distance 150mm

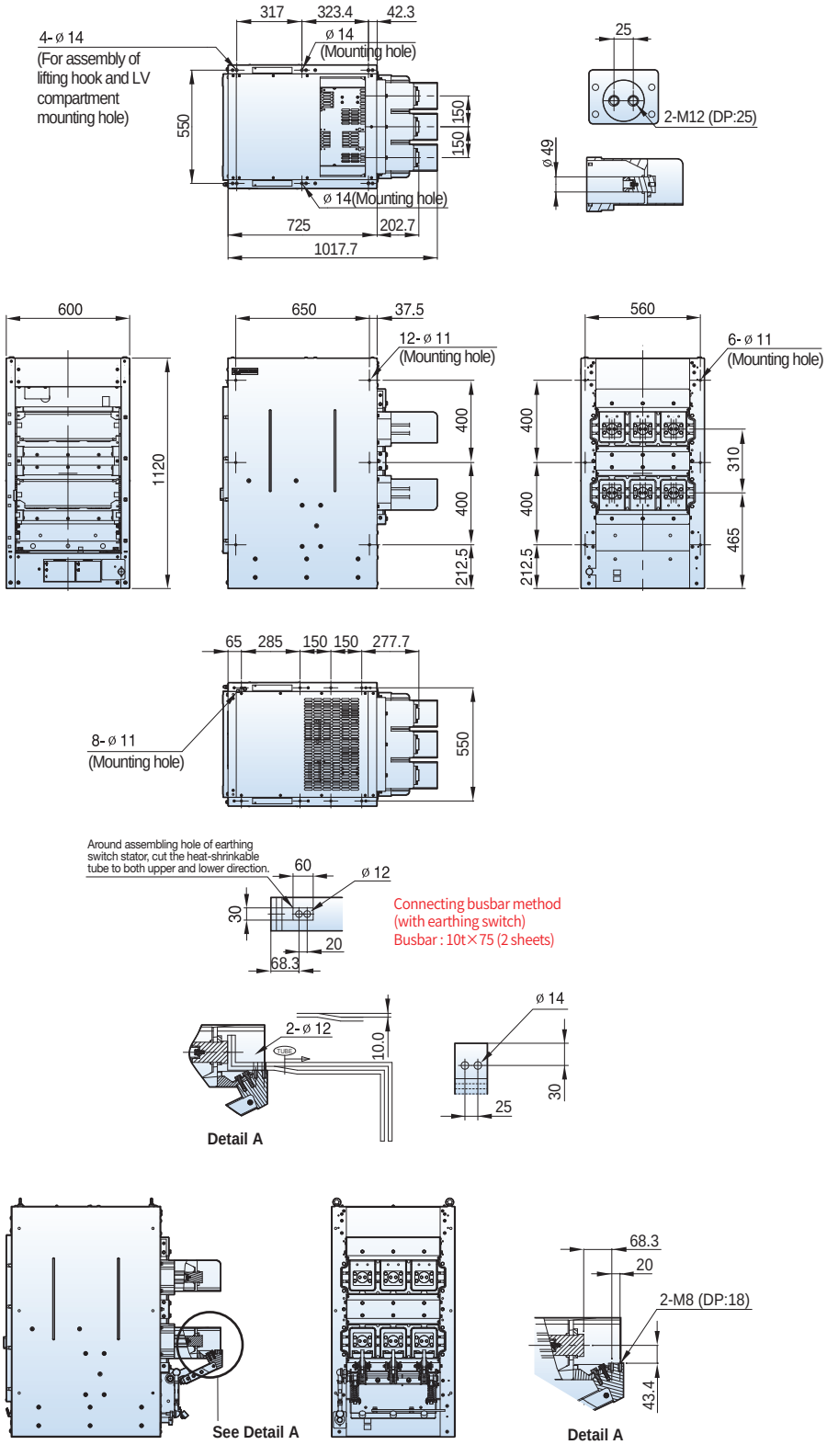

12/17.5kV, 20/25kA, 2000A

Withdrawable

Type
VCL-12H20B20
VCL-12H25B20
VCL-17H20B20
VCL-17H25B20

■ H type cradle, phase distance 210mm

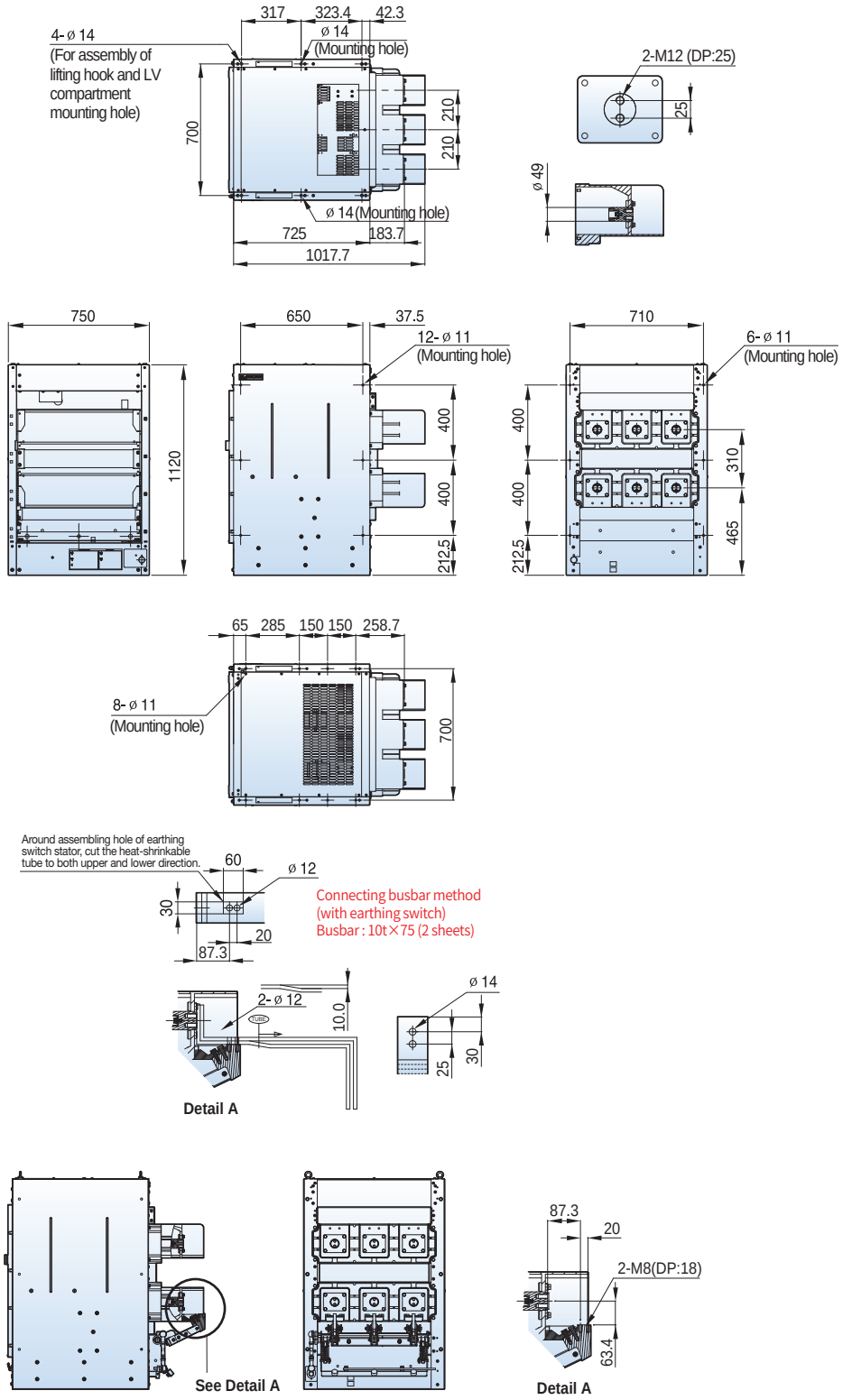

Dimensions - VL type (VL-06/12/17)

12/17.5kV, 31.5kA, 630/1250A

Fixed

■ P type, phase distance 150mm

Type
VL-12P32A06
VL-12P32A13
VL-17P32A06
VL-17P32A13

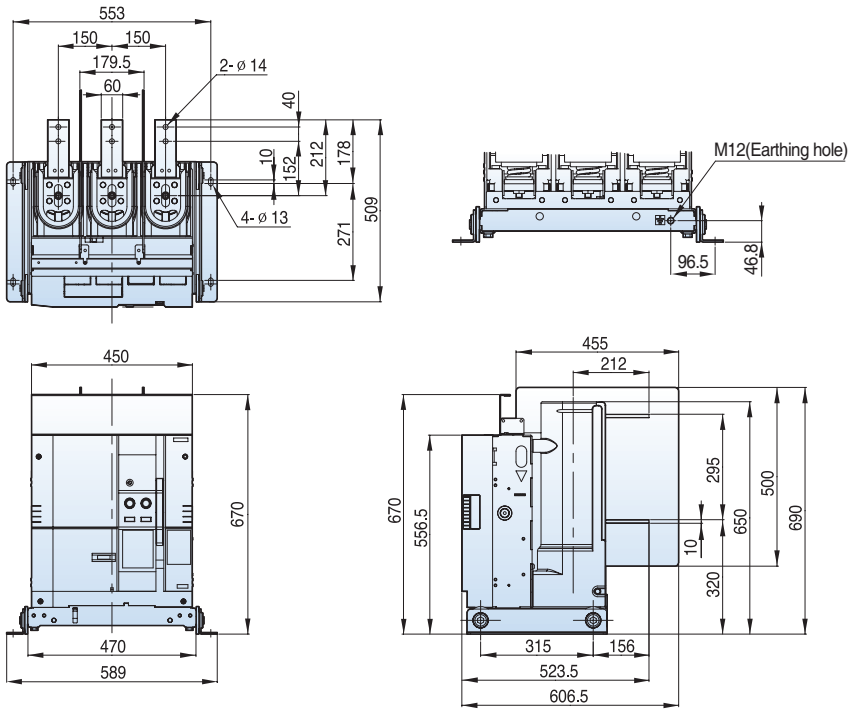

Fixed

■ P type, phase distance 210mm

Type
VL-12P32B06
VL-12P32B13
VL-17P32B06
VL-17P32B13

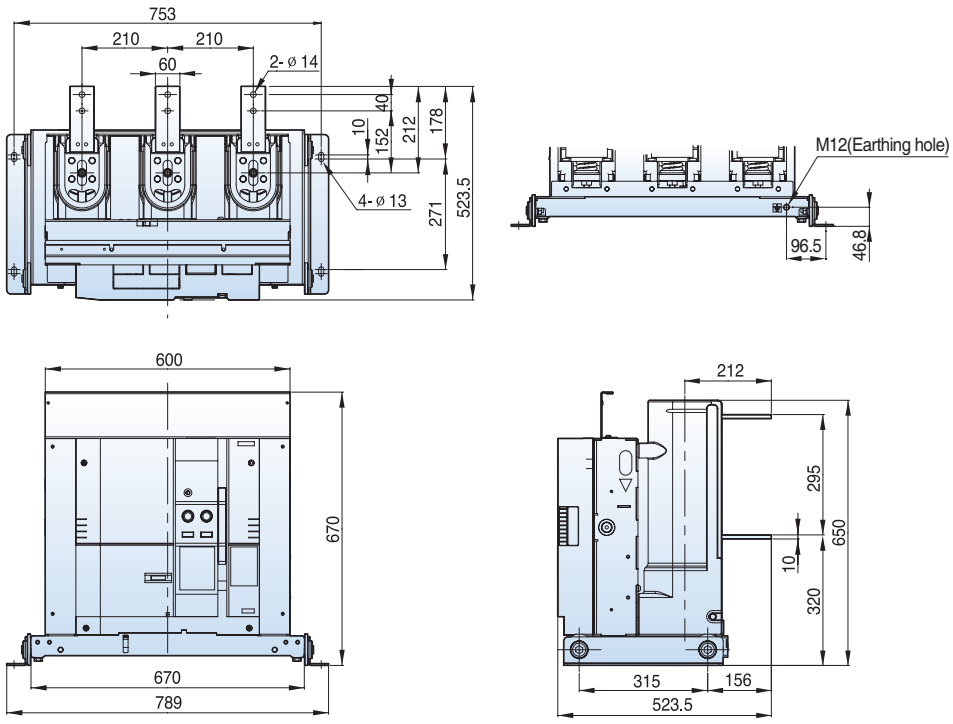

7.2/12kV, 31.5kA, 1250/2000A

Withdrawable

■ Gs type unit, phase distance 150mm

Type
VL-06Gs32A13
VL-06Gs32A20
VL-12Gs32A13
VL-12Gs32A20

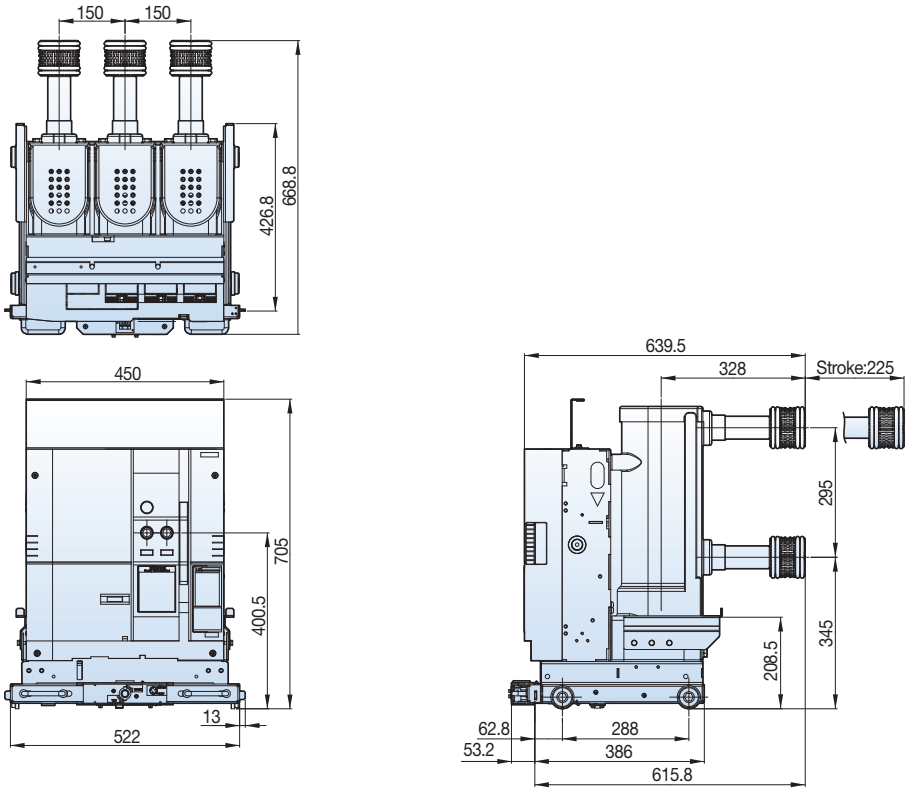

Withdrawable

■ Gs type cradle, phase distance 150mm

Type
VCL-06Gs32A13
VCL-06Gs32A20
VCL-12Gs32A13
VCL-12Gs32A20

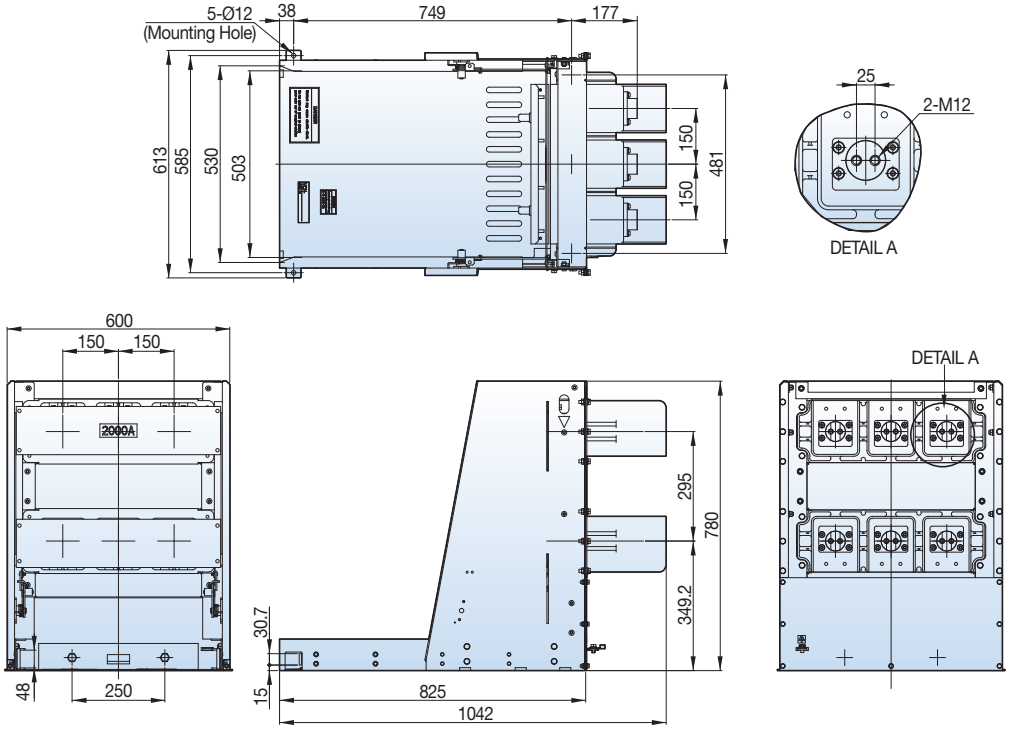

Dimensions - VL type (VL-06/12/17)

12kV, 31.5kA, 1250A

Withdrawable

Type
VL-12K32K13

■ K type unit T type, phase distance 150mm

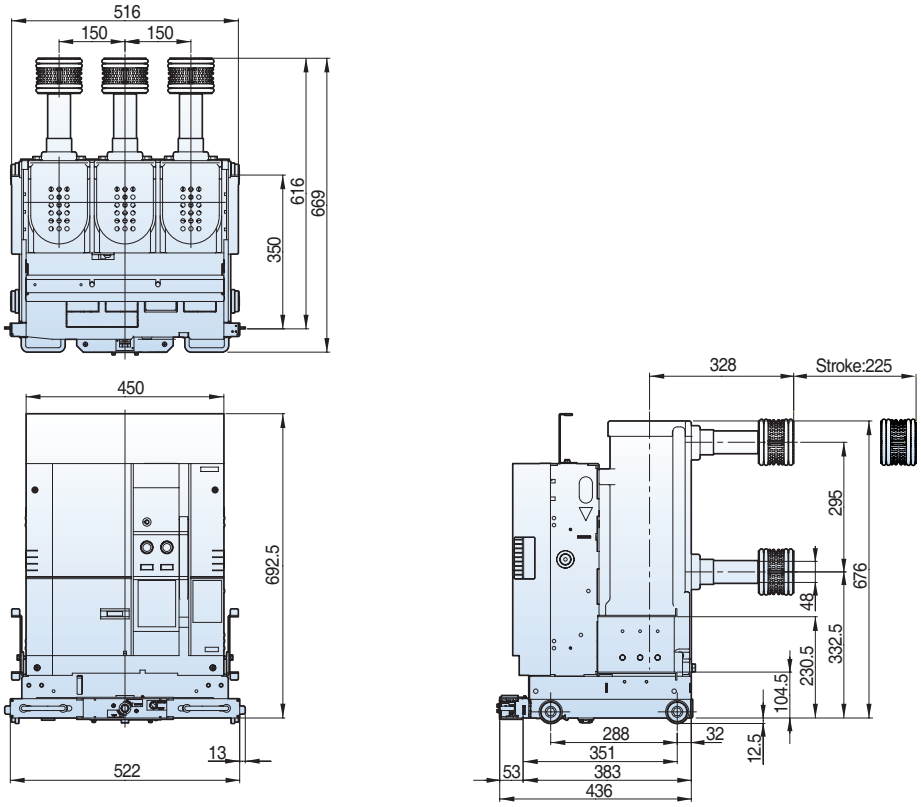

Withdrawable

Type
VL-12K32A13

■ K type unit T2 type, phase distance 150mm

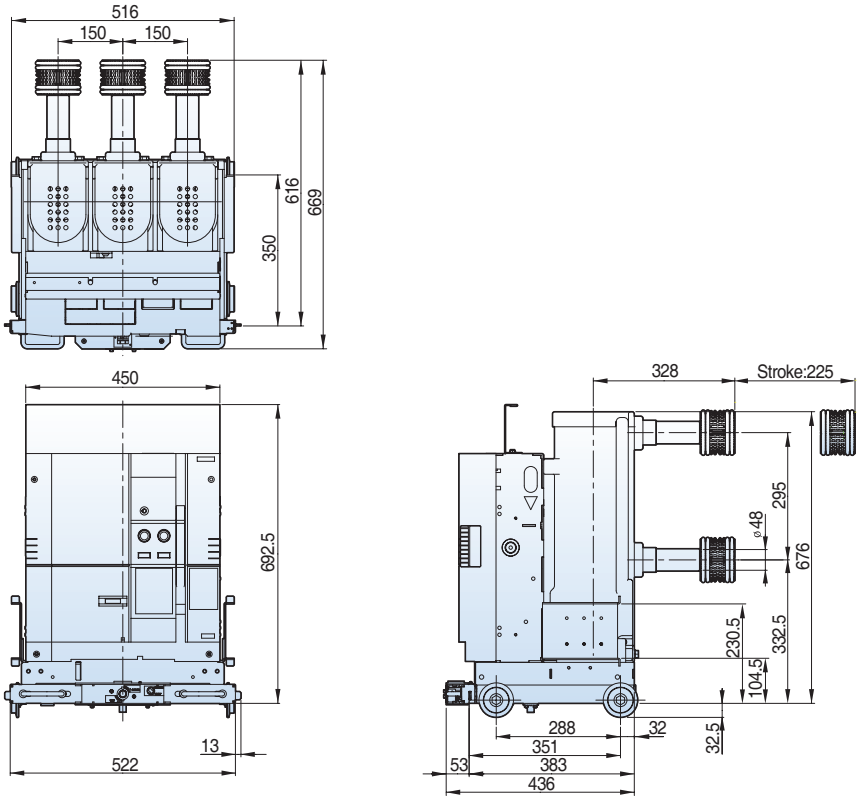

12kV, 31.5kA, 1250A

Withdrawable

■ MCSG cradle T type, phase distance 150mm

Type
VCL-12K32K13

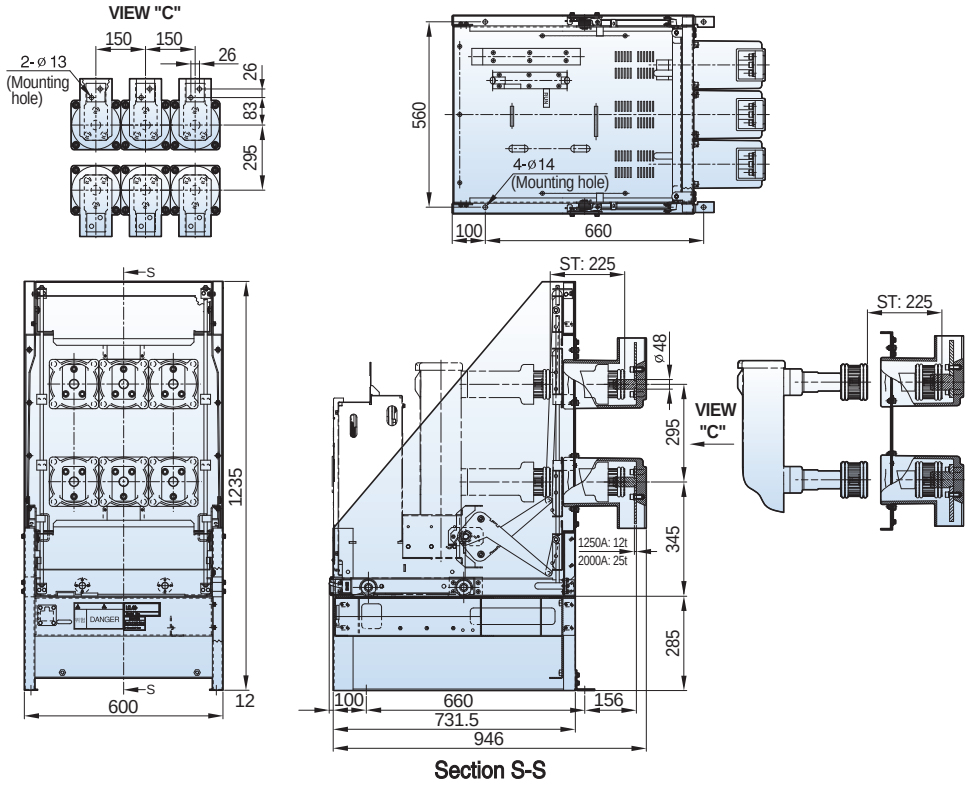

Withdrawable

■ MCSG cradle T2 type, phase distance 150mm

Type
VCL-12K32A13

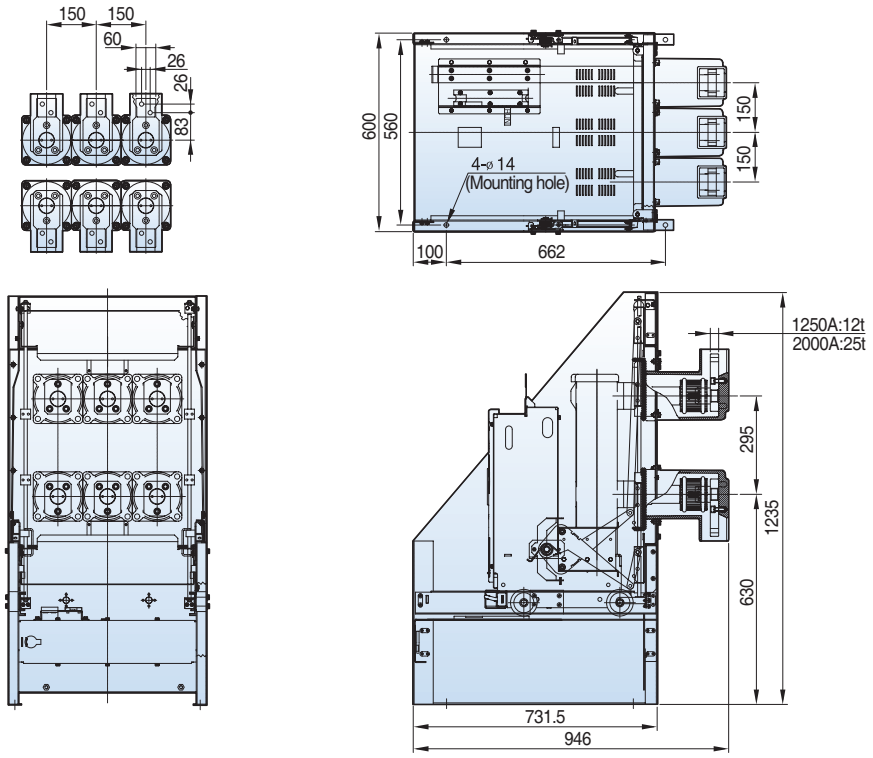

Dimensions - VL type (VL-06/12/17)

12kV, 31.5kA, 2000A

Withdrawable

■ K type unit T type, phase distance 150mm

Type
VL-12K32K20

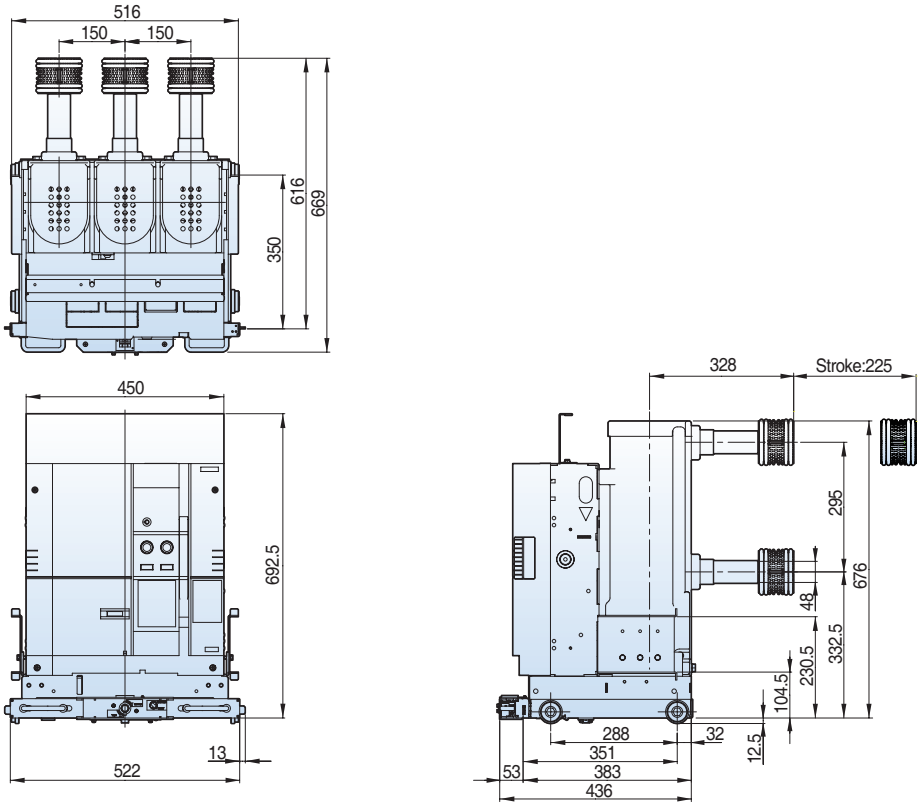

Withdrawable

■ K type unit T2 type, phase distance 150mm

Type
VL-12K32A20

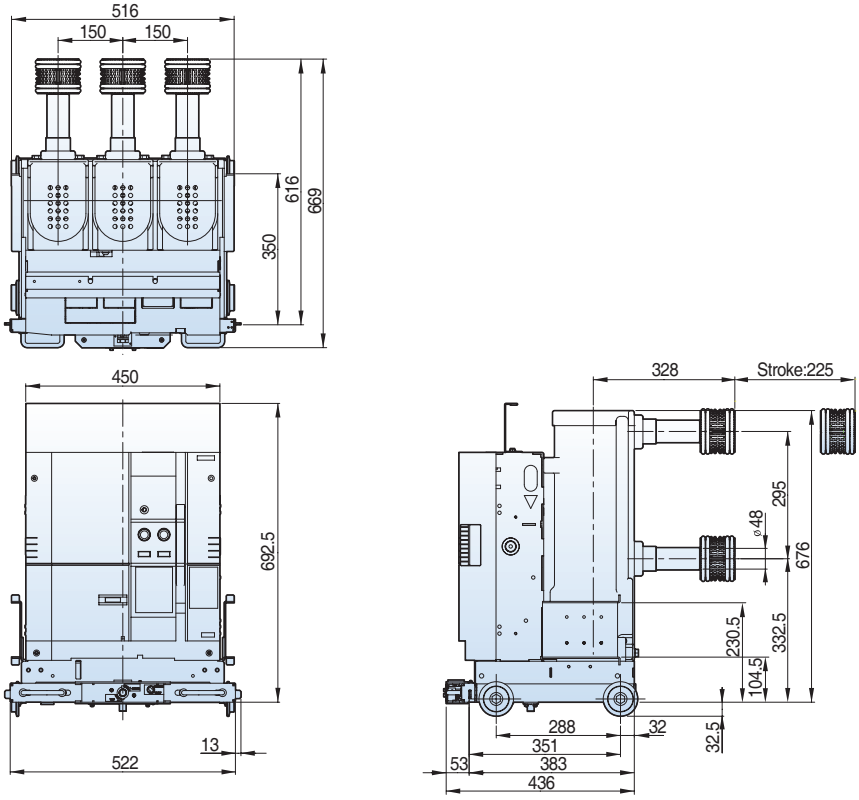

12kV, 31.5kA, 2000A

Withdrawable

■ MCSG cradle T type, phase distance 150mm

Type
VCL-12K32K20

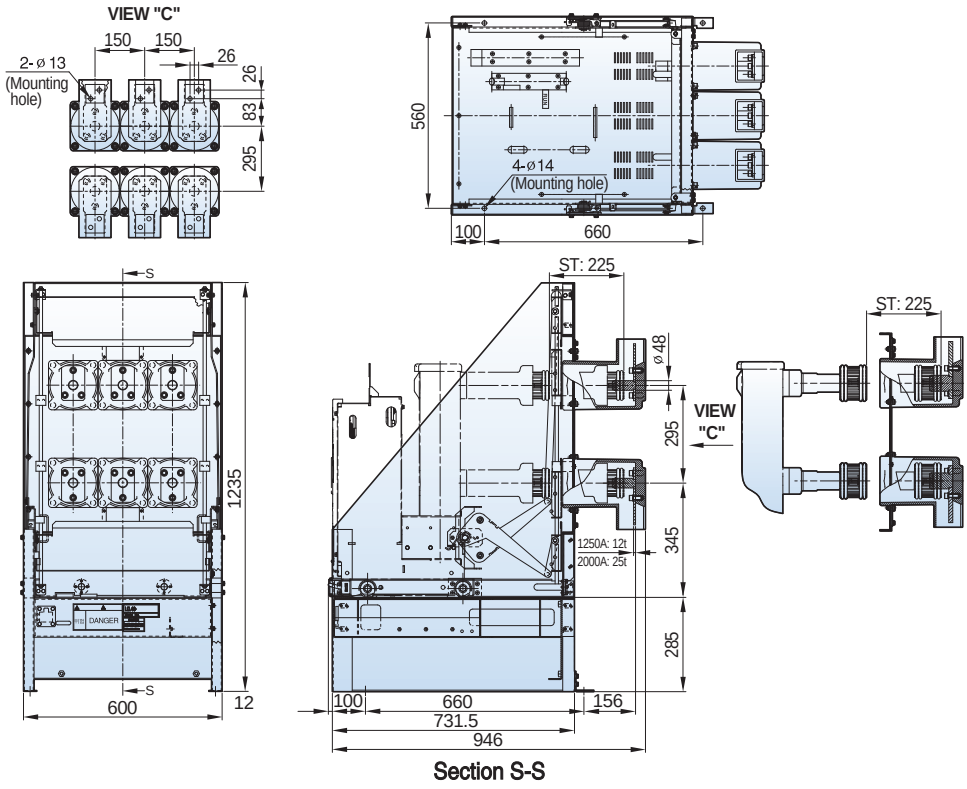

Withdrawable

■ MCSG cradle T2 type, phase distance 150mm

Type
VCL-12K32A20

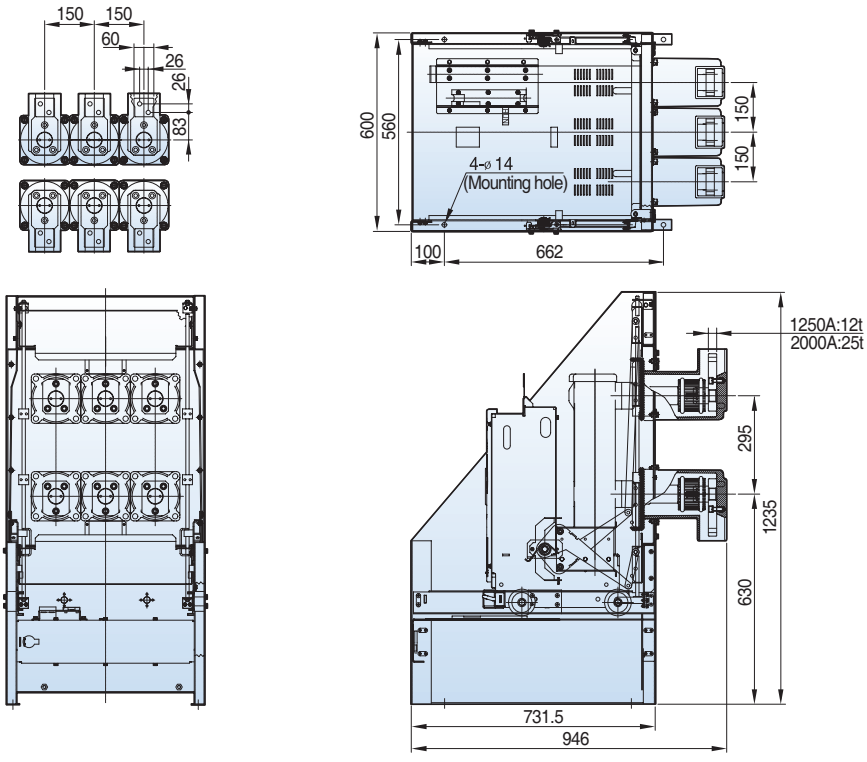

Dimensions - VL type (VL-06/12/17)

12/17.5kV, 31.5kA, 630/1250A

Withdrawable

■ H type unit, phase distance 150mm

Type
VL-12H32A06
VL-12H32A13
VL-17H32A06
VL-17H32A13

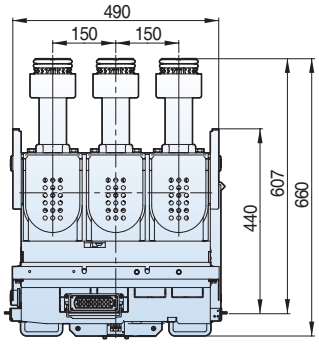

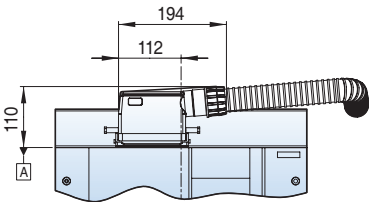

Note) Please be informed that When B-type connecter is used to design switchgears, the height can be 110mm higher based on "A"

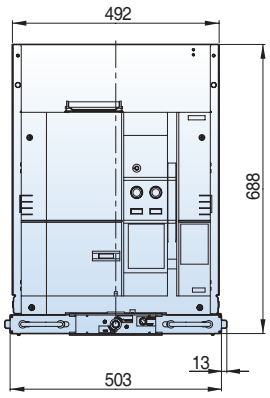

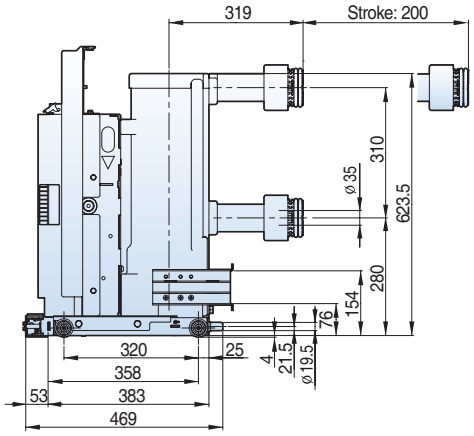

Withdrawable

■ H type unit, phase distance 210mm

Type
VL-12H32B06
VL-12H32B13
VL-17H32B06
VL-17H32B13

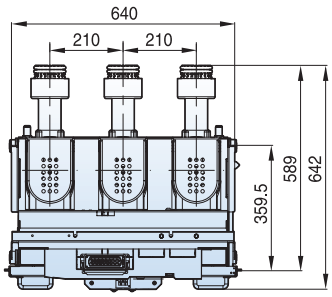

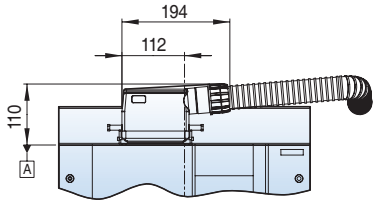

Note) Please be informed that When B-type connecter is used to design switchgears, the height can be 110mm higher based on "A"

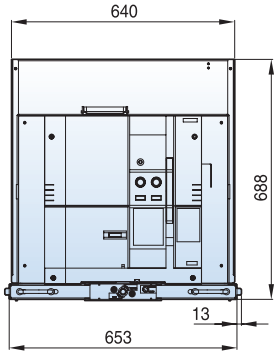

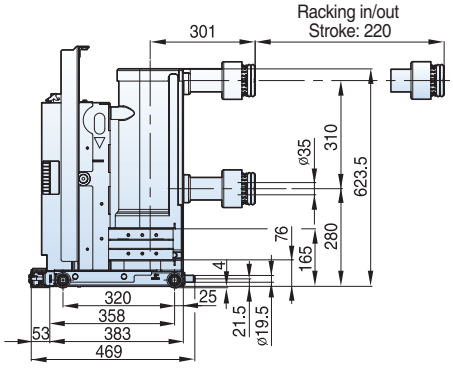

12kV, 31.5kA, 630/1250A

Withdrawable

Type
VCL-12Ha32A06
VCL-12Ha32A13

■ Ha type cradle, phase distance 150mm

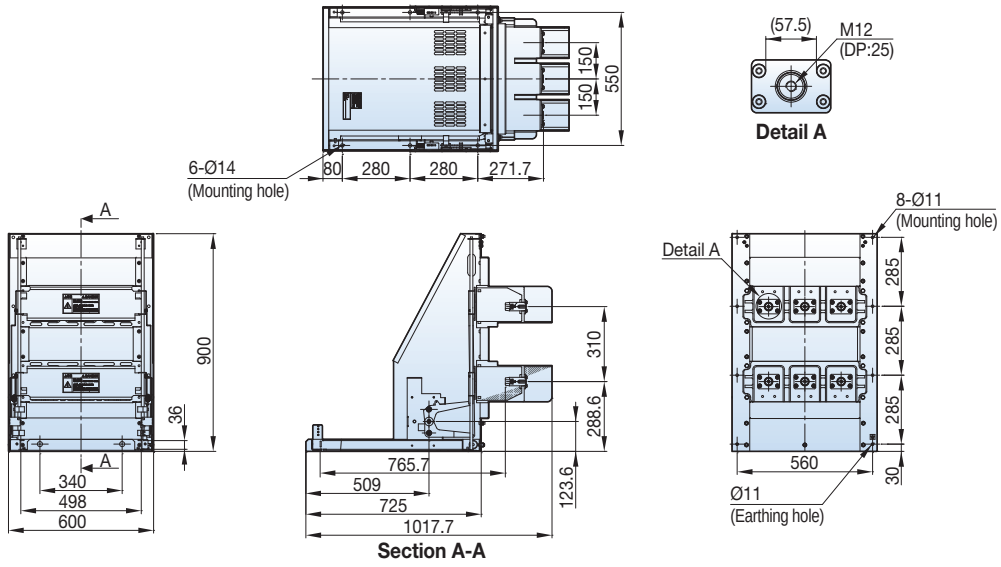

■ Ha type cradle, phase distance 150mm (Earthing S/W Option type)

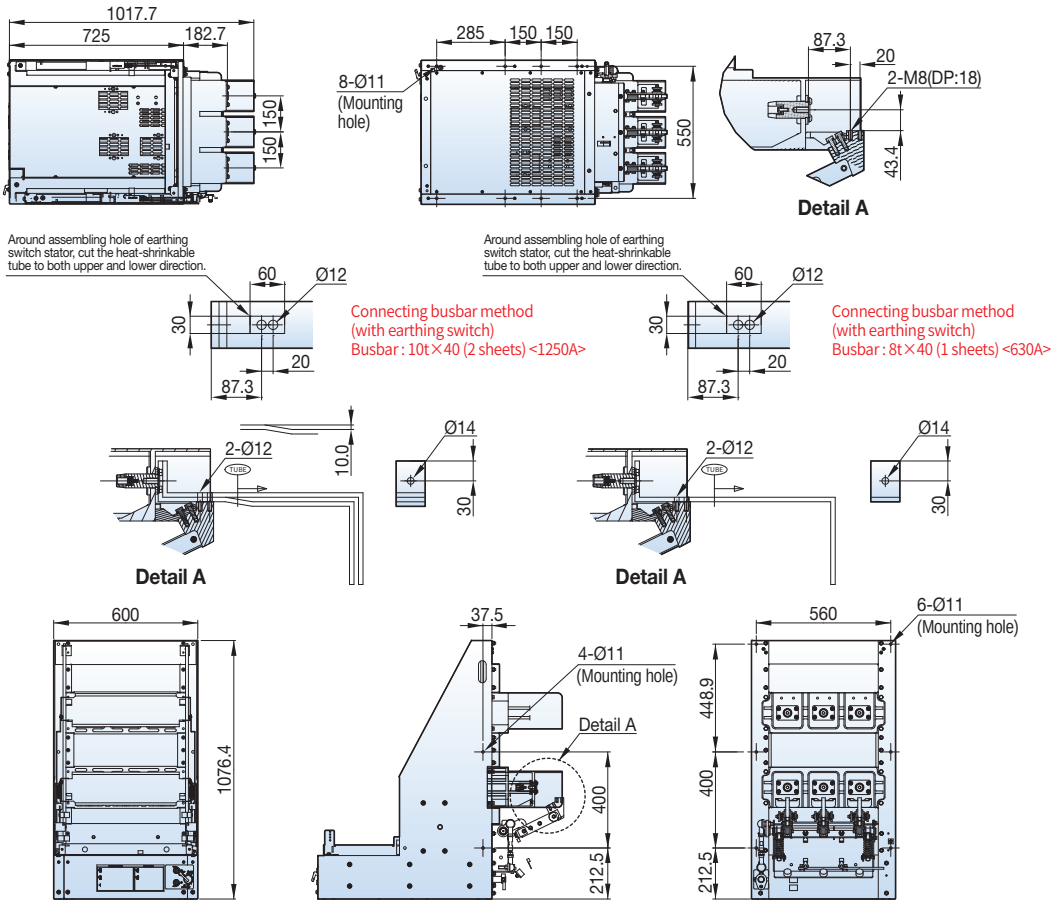

Dimensions - VL type (VL-06/12/17)

12/17.5kV, 31.5kA, 630/1250A

Withdrawable

Type
VCL-12H32A06
VCL-12H32A13
VCL-17H32A06
VCL-17H32A13

■ H type cradle, phase distance 150mm

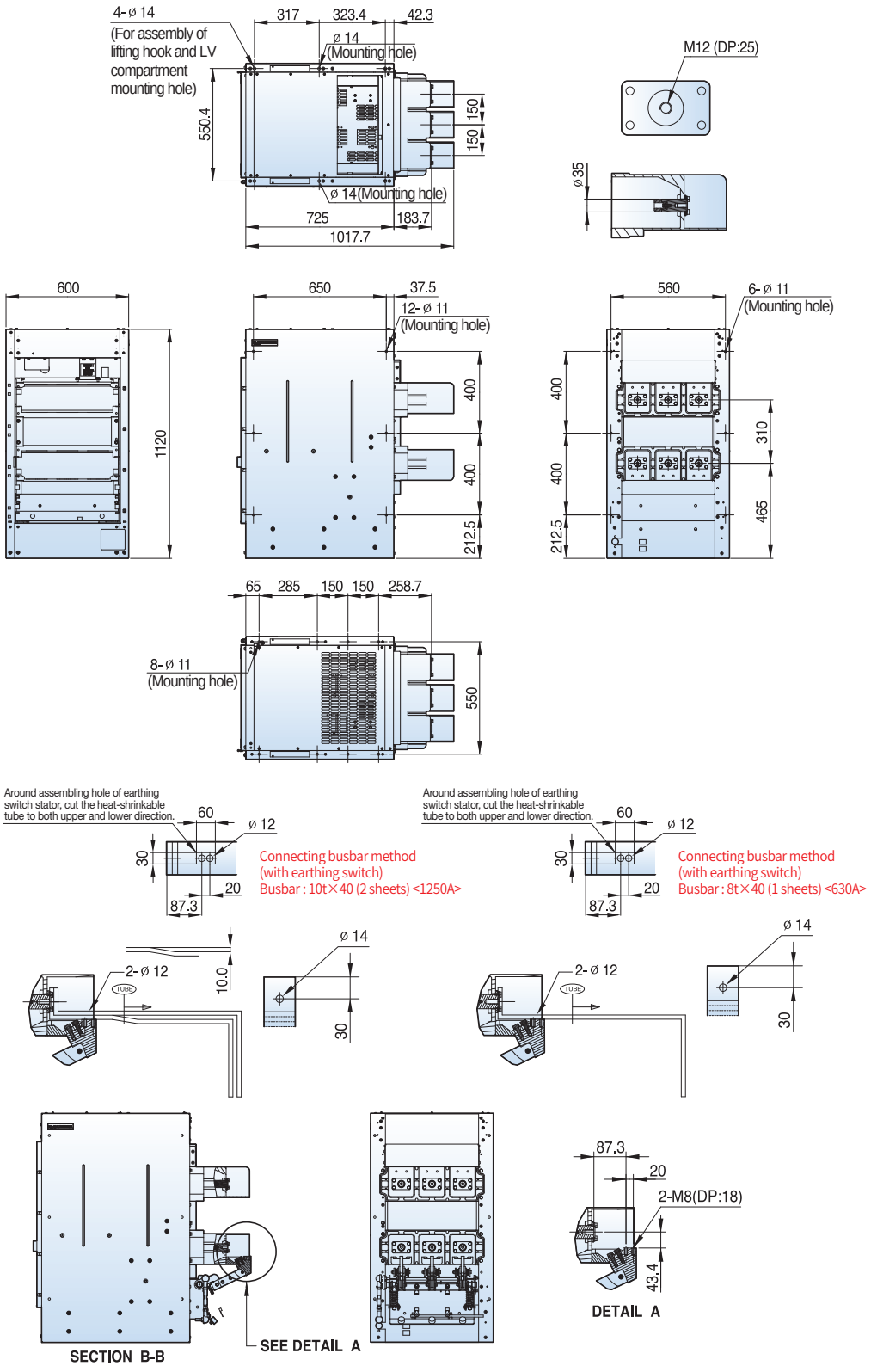

12/17.5kV, 31.5kA, 630/1250A

Withdrawable

Type
VCL-12H32B06
VCL-12H32B13
VCL-17H32B06
VCL-17H32B13

■ H type cradle, phase distance 210mm

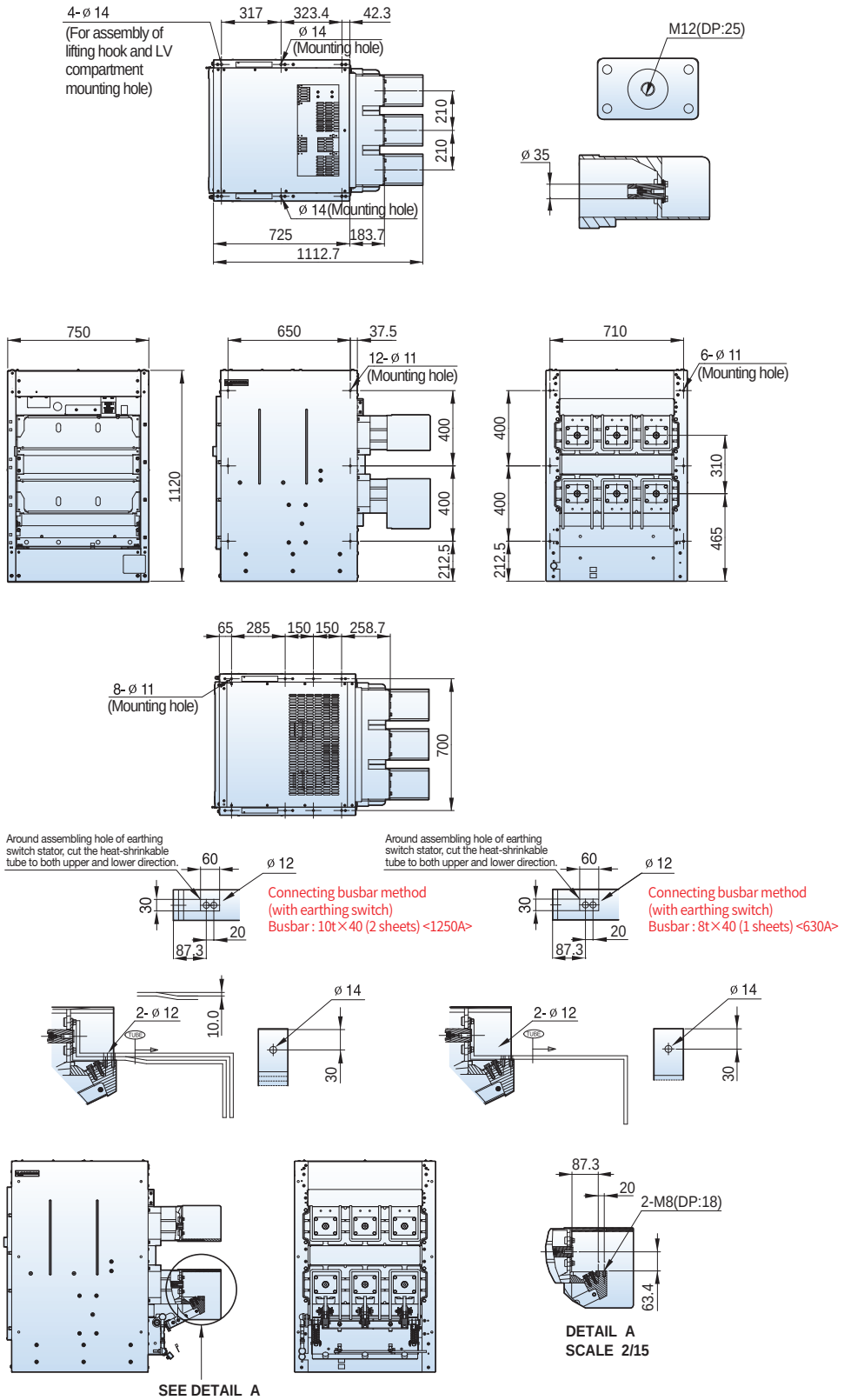

Dimensions - VL type (VL-06/12/17)

12/17.5kV, 31.5kA, 2000A

Fixed

Type
VL-12P32B20
VL-17P32B20

■ P type, phase distance 210mm

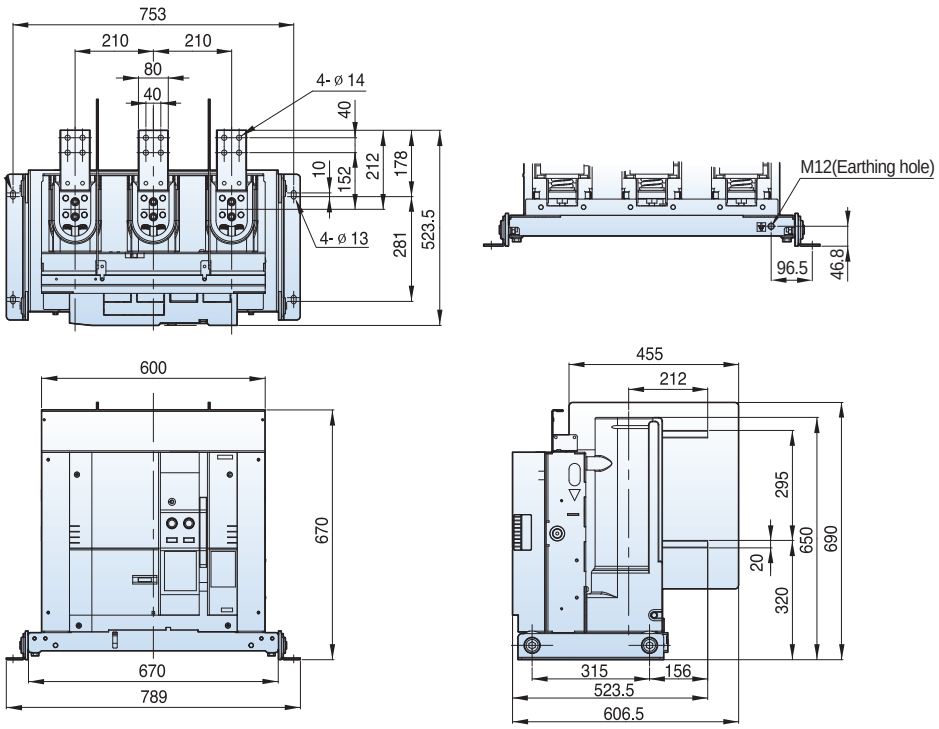

Withdrawable

Type
VL-12H32A20
VL-17H32A20

■ H type unit, phase distance 150mm

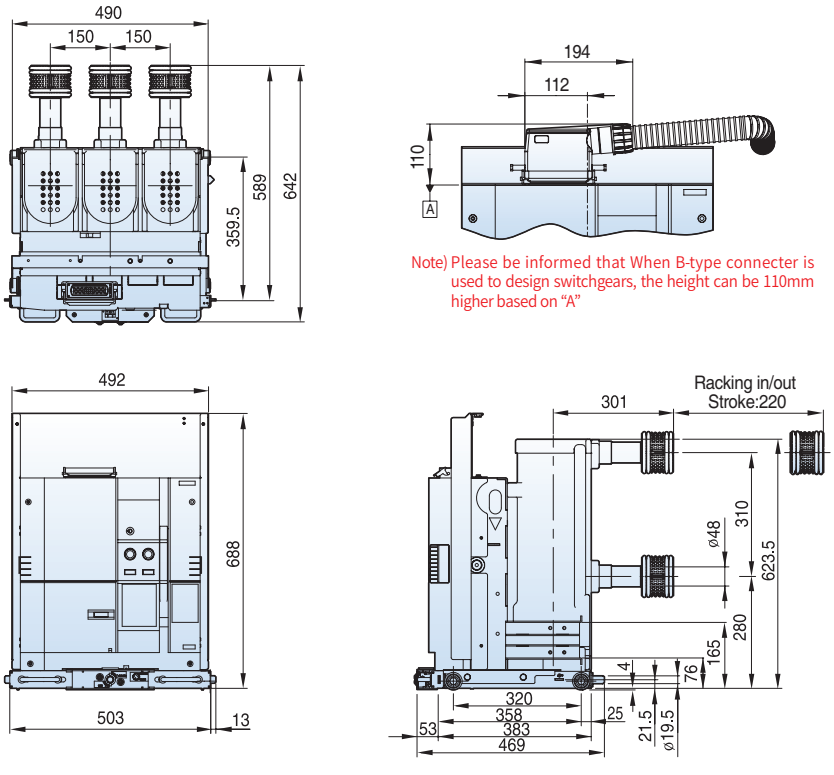

Note) Please be informed that When B-type connecter is used to design switchgears, the height can be 110mm higher based on "A"

12/17.5kV, 31.5kA, 2000A

Withdrawable

Type
VL-12H32B20
VL-17H32B20

■ H type unit, phase distance 210mm

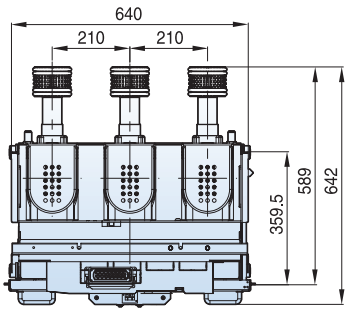

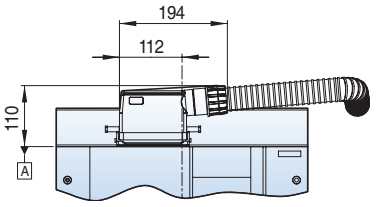

Note) Please be informed that When B-type connecter is used to design switchgears, the height can be 110mm higher based on "A"

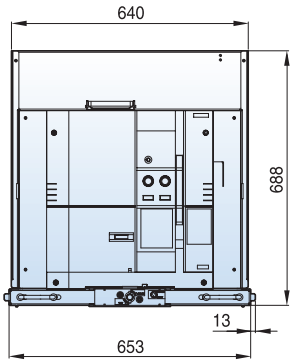

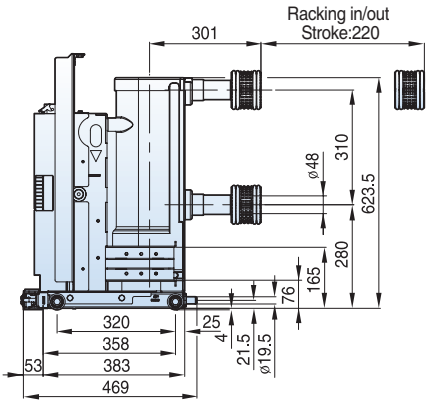

Dimensions - VL type (VL-06/12/17)

12kV, 31.5kA, 2000A

Withdrawable

Type
VCL-12Ha32A20

■ Ha type cradle, phase distance 150mm

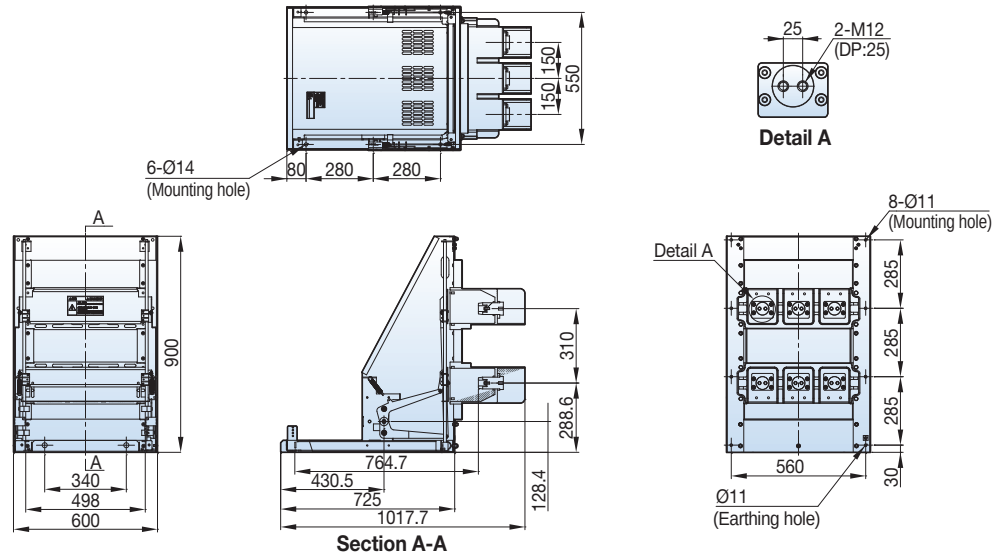

■ Ha type cradle, phase distance 150mm (Earthing S/W Option type)

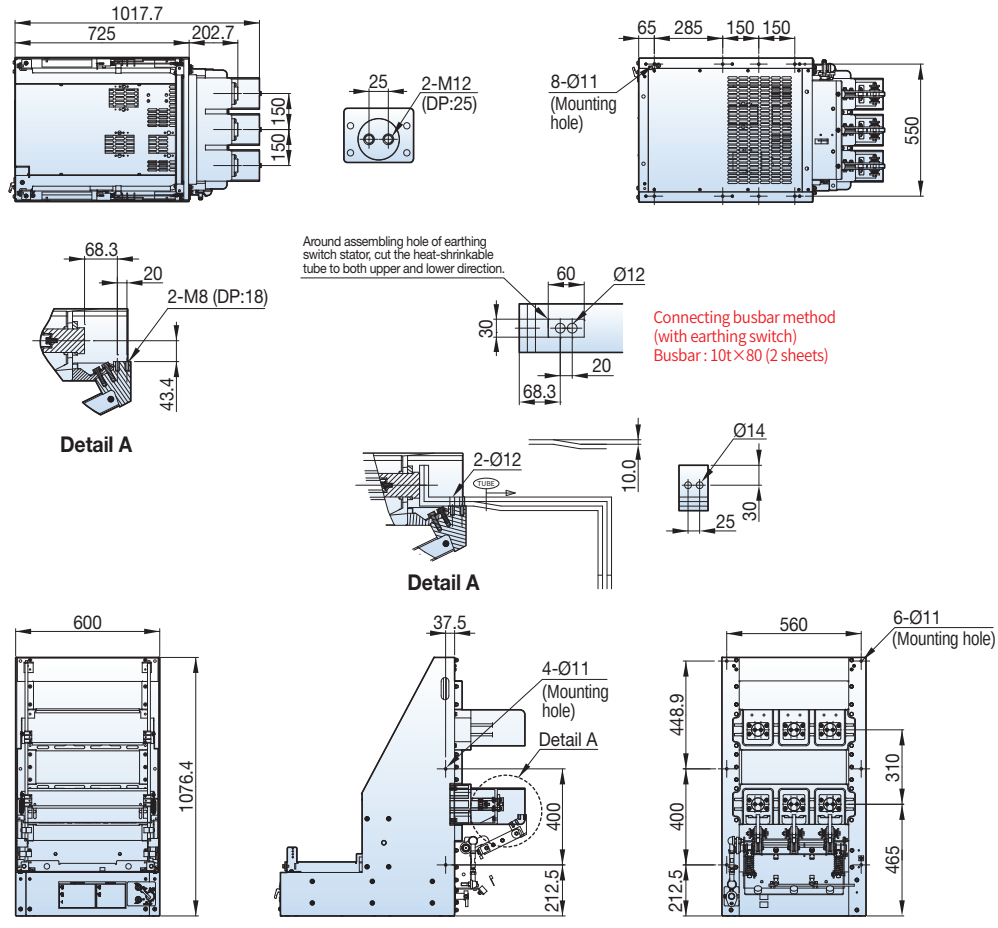

12/17.5kV, 31.5kA, 2000A

Withdrawable

Type
VCL-12H32A20
VCL-17H32A20

■ H type cradle, phase distance 150mm

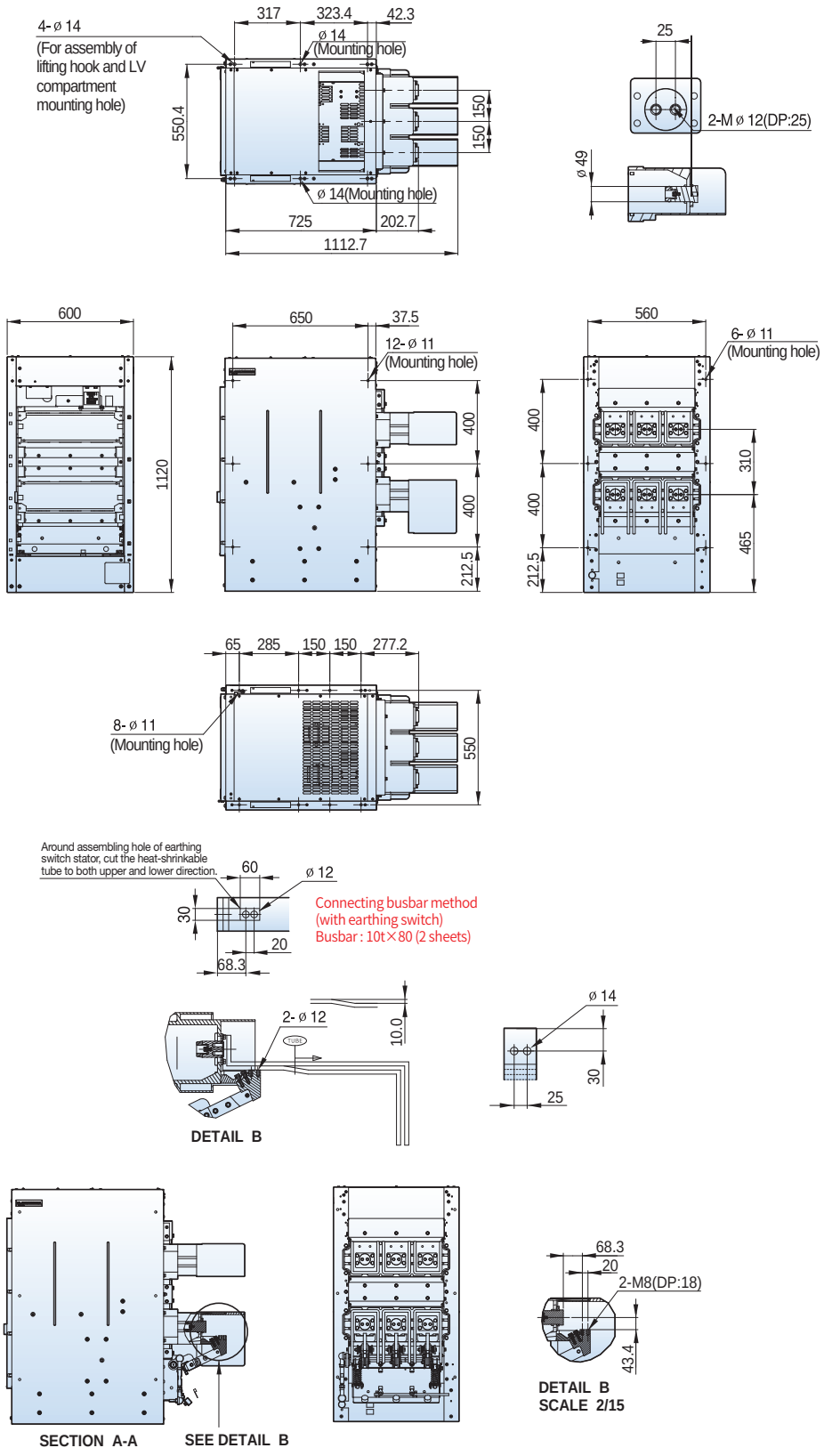

Dimensions - VL type (VL-06/12/17)

12/17.5kV, 31.5kA, 2000A

Withdrawable

Type
VCL-12H32B20
VCL-17H32B20

■ H type cradle, phase distance 210mm

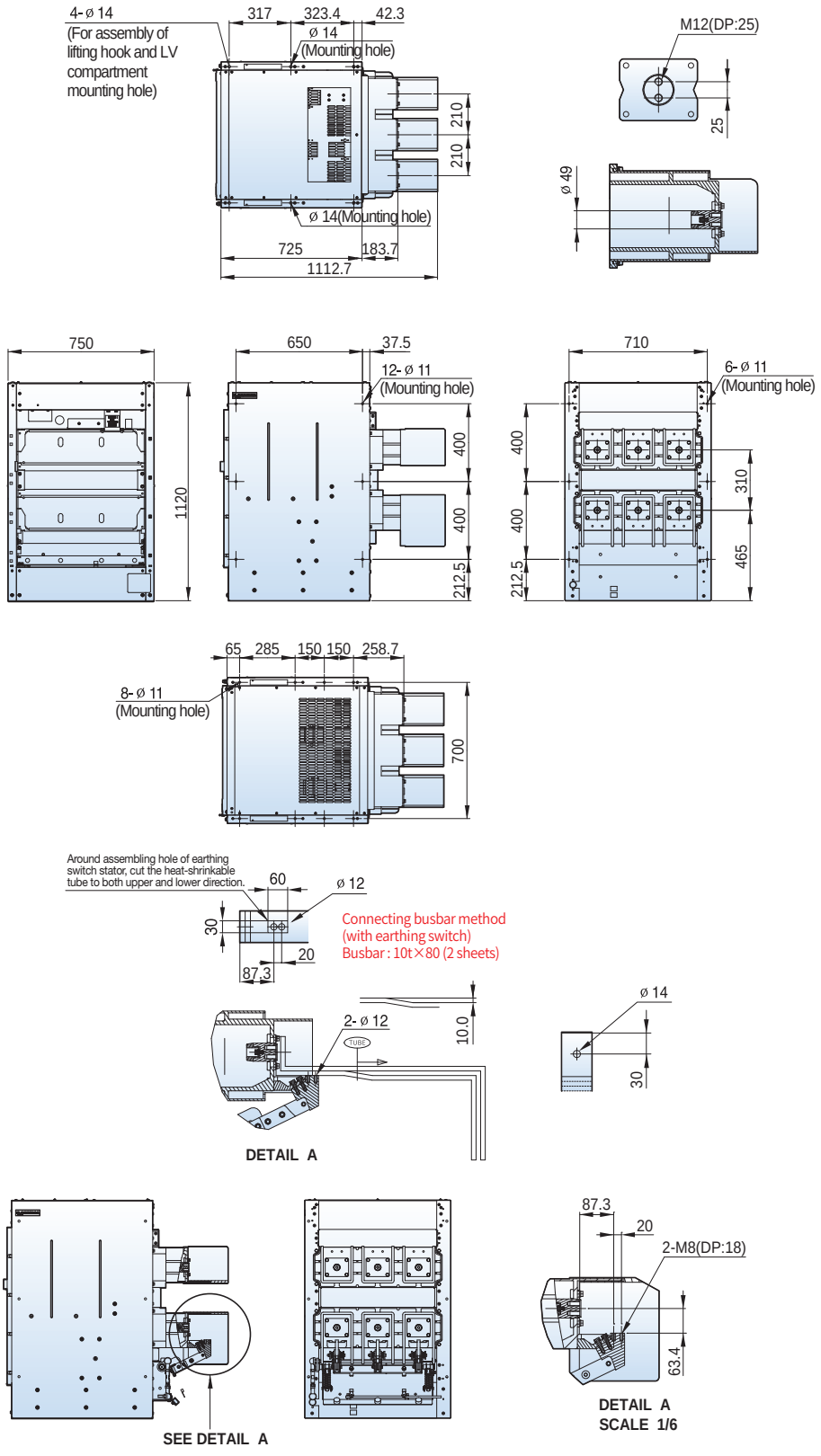

12/17.5kV, 31.5kA, 2500A

Fixed

Type
VL-12P32B25
VL-17P32B25

■ P type, phase distance 210mm

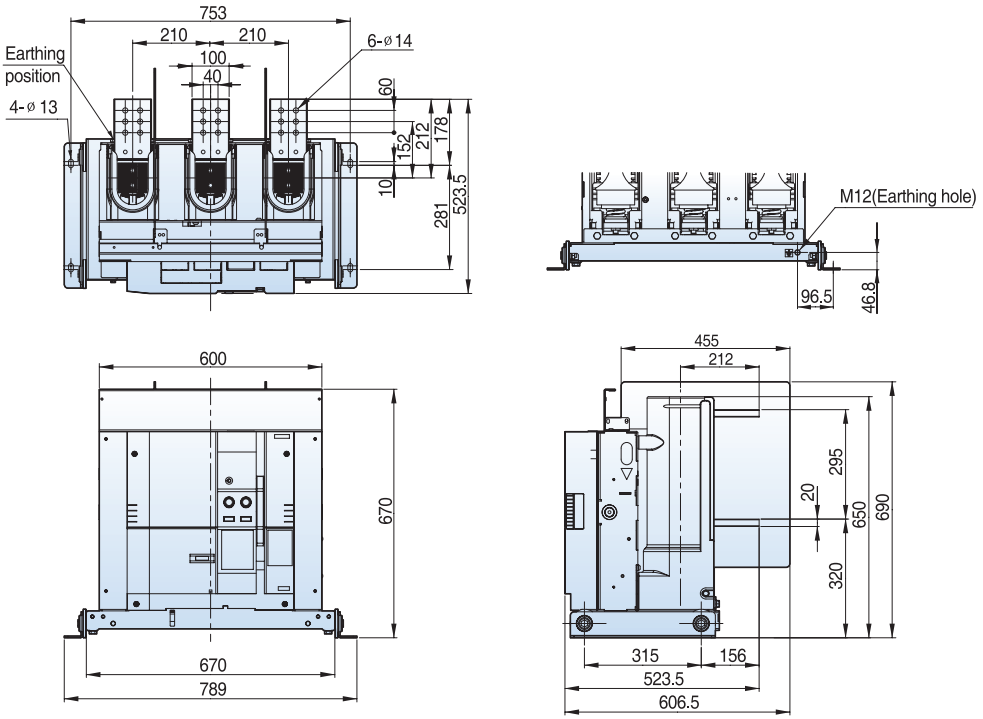

Fixed

Type
VL-12P32D25
VL-17P32D25

■ P type, phase distance 275mm

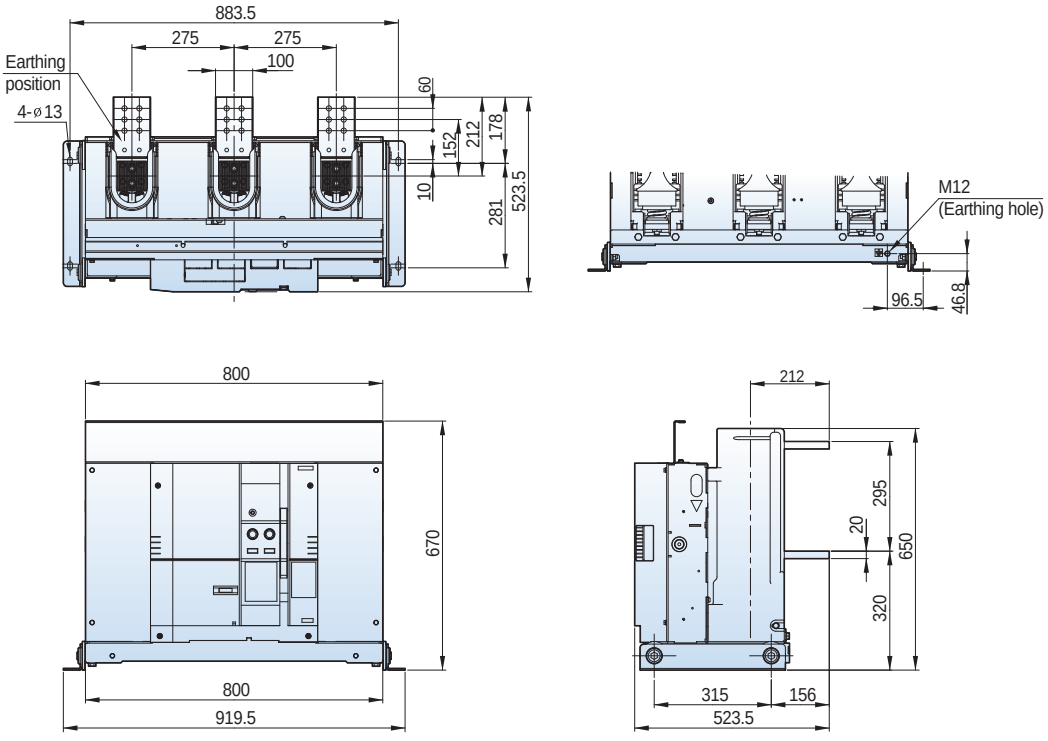

Dimensions - VL type (VL-06/12/17)

12/17.5kV, 31.5kA, 2500A

Withdrawable

Type

VL-12H32B25
VL-17H32B25

■ H type unit, phase distance 210mm

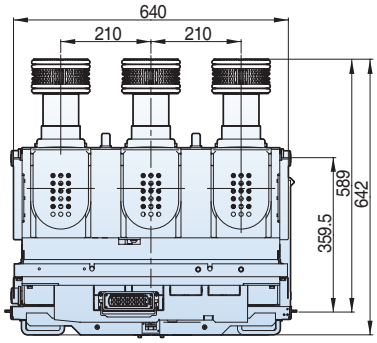

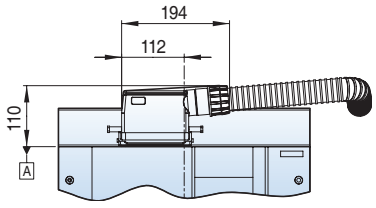

Note) Please be informed that When B-type connecter is used to design switchgears, the height can be 110mm higher based on "A"

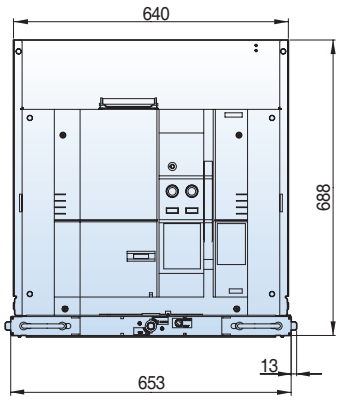

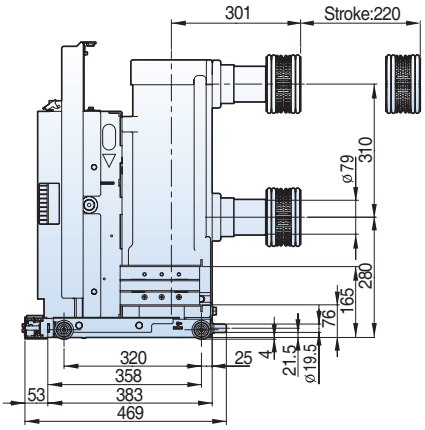

Withdrawable

Type

VL-12H32D25
VL-17H32D25

■ H type unit, phase distance 275mm

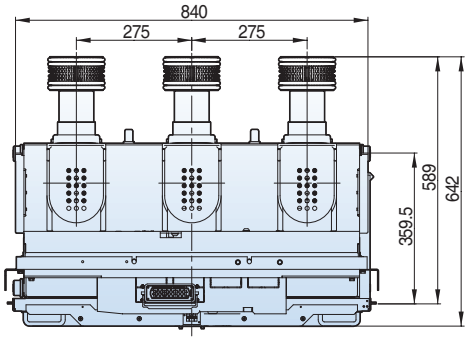

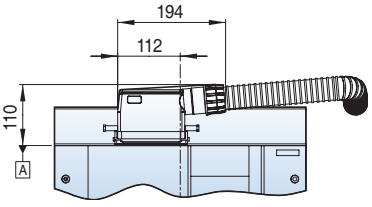

Note) Please be informed that When B-type connecter is used to design switchgears, the height can be 110mm higher based on "A"

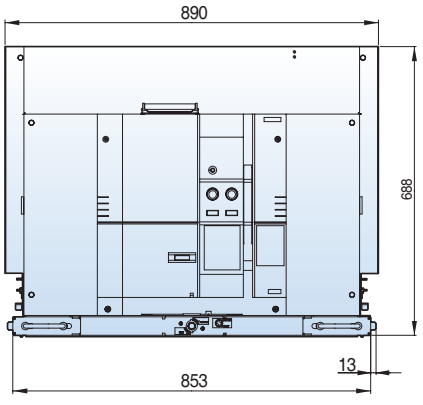

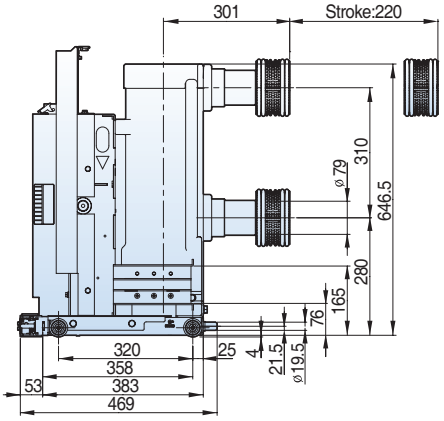

12/17.5kV, 31.5A, 2500A

Withdrawable

Type
VCL-12H32B25
VCL-17H32B25

■ H type cradle, phase distance 210mm

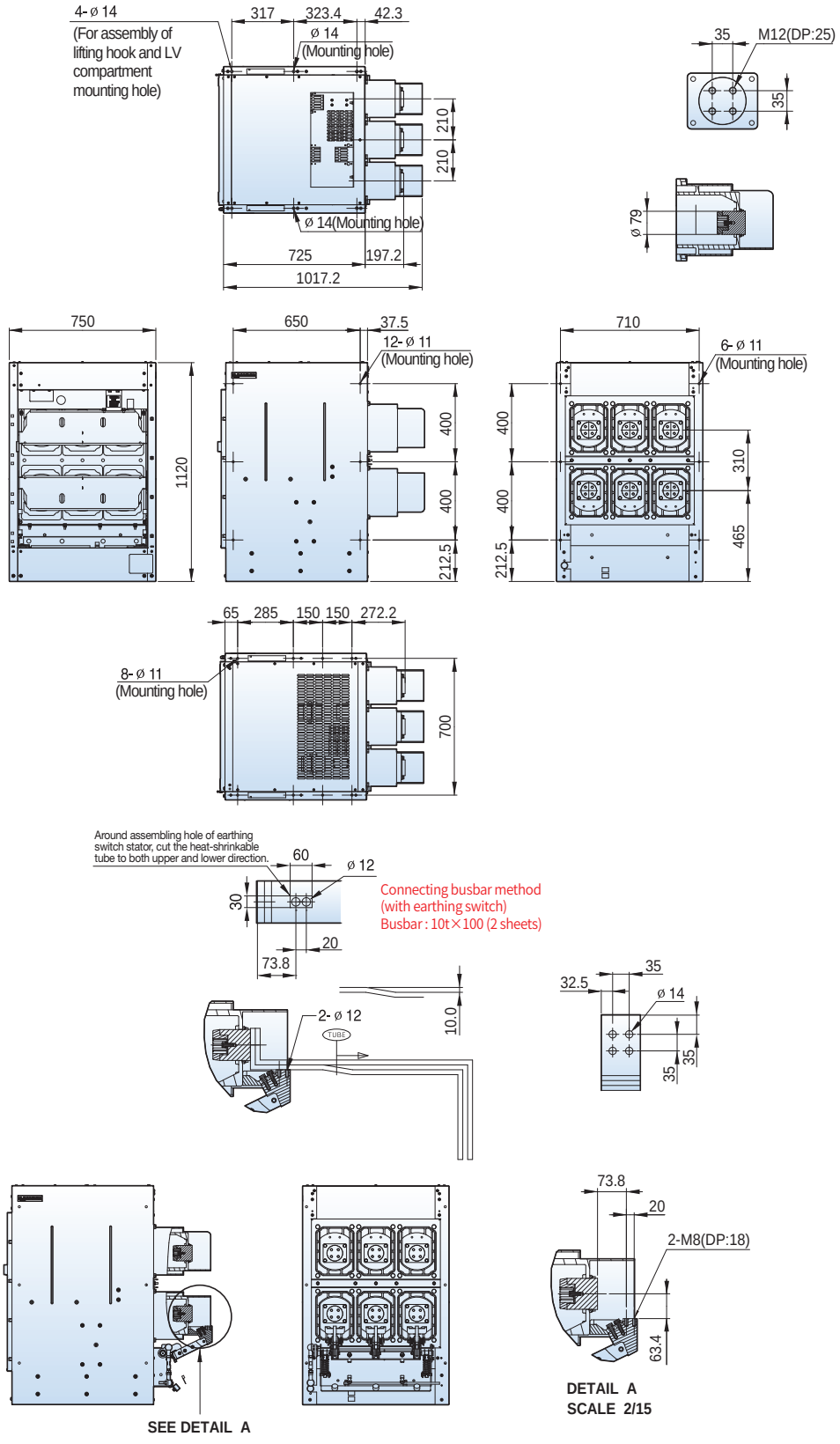

Dimensions - VL type (VL-20/25)

12/17.5kV, 31.5A, 2500A

Withdrawable

Type
VCL-12H32D25
VCL-17H32D25

■ H type cradle, phase distance 275mm

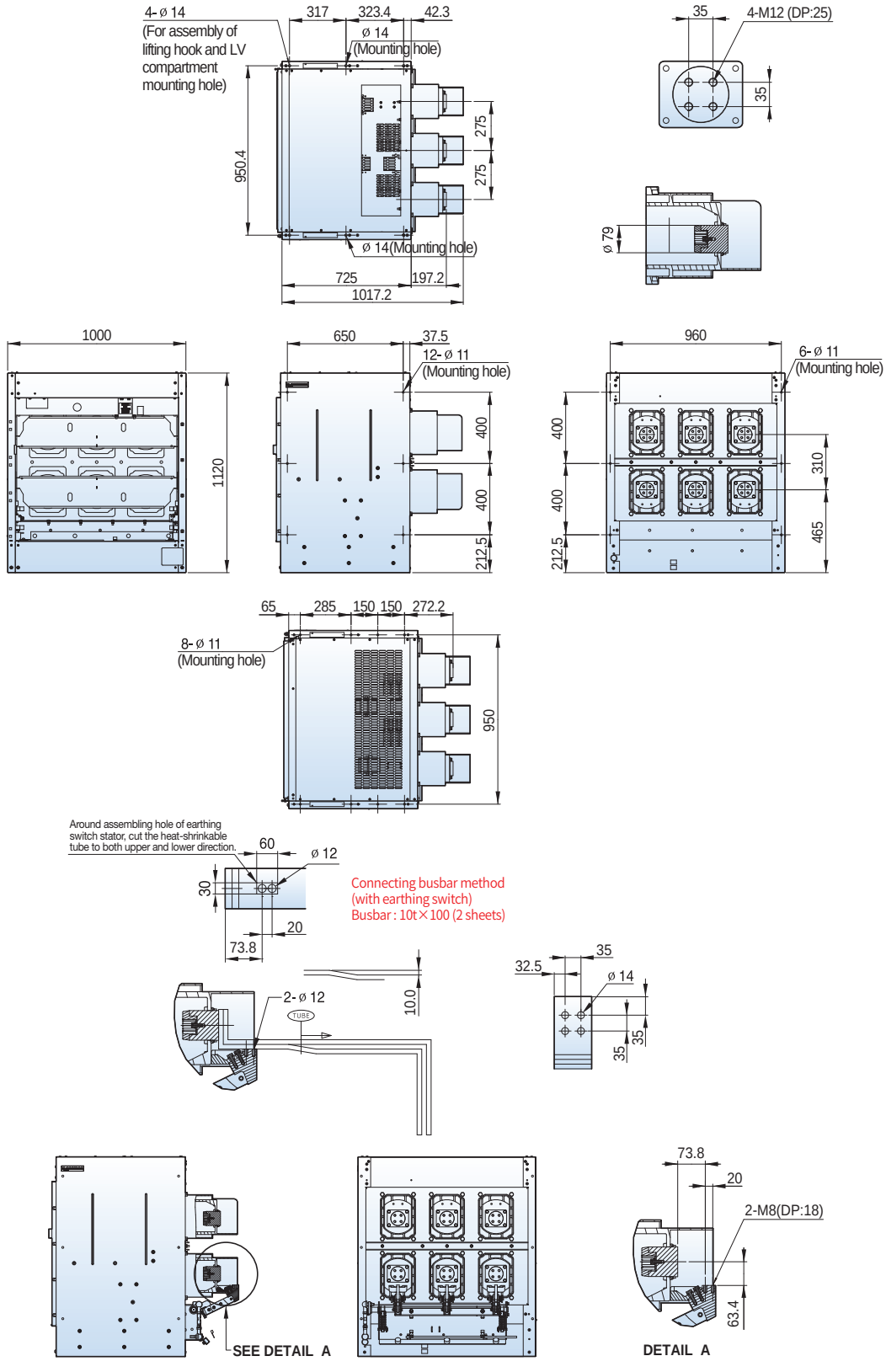

24/25.8kV 12.5kA 630A

Fixed

Type
VL-20P13F06
VL-25P13F06

■ P type, phase distance 265mm

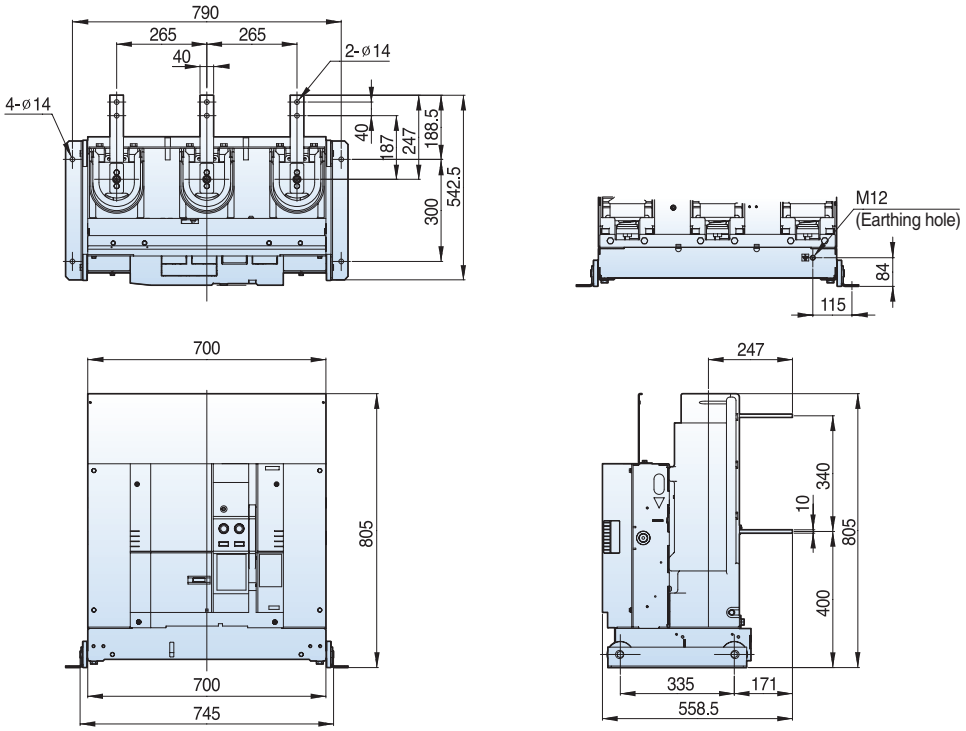

Withdrawable

Type
VL-20E13F06
VL-25E13F06

■ E type unit Visible, Clip contact, phase distance 265mm

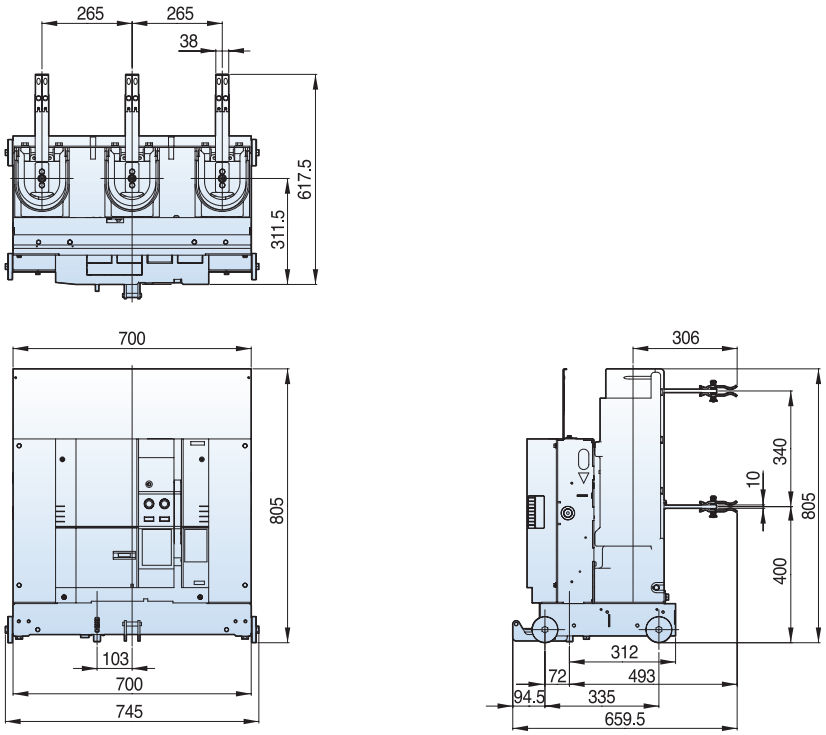

Dimensions - VL type (VL-20/25)

24/25.8kV 12.5kA 630A

Withdrawable

■ F type unit Visible, Clip contact, phase distance 265mm

Type
VL-20F13F06
VL-25F13F06

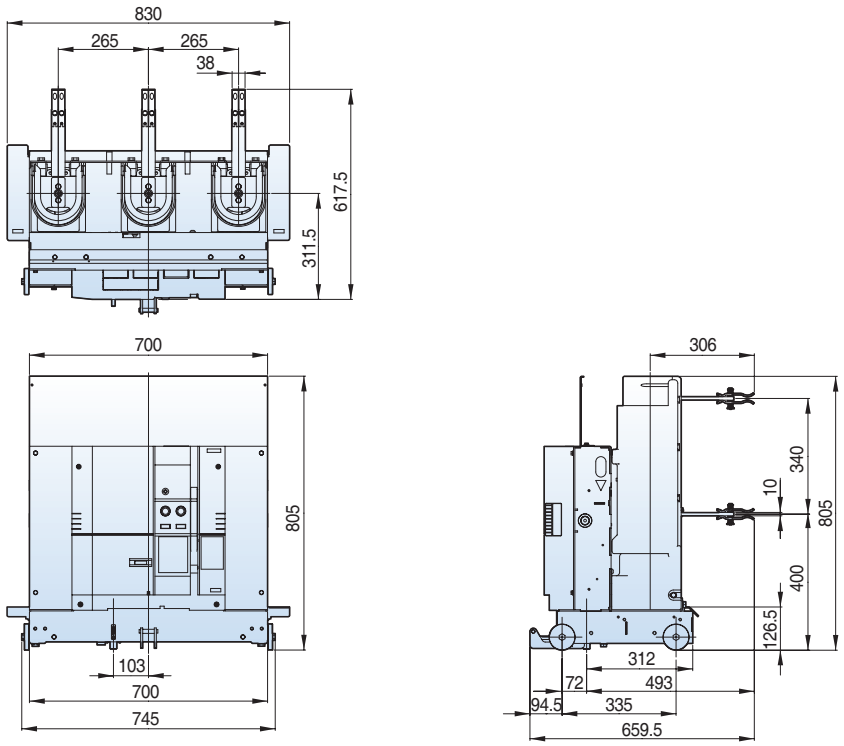

Withdrawable

■ E type unit Enclosed, Tulip contact, phase distance 265mm

Type
VL-20E13G06
VL-25E13G06

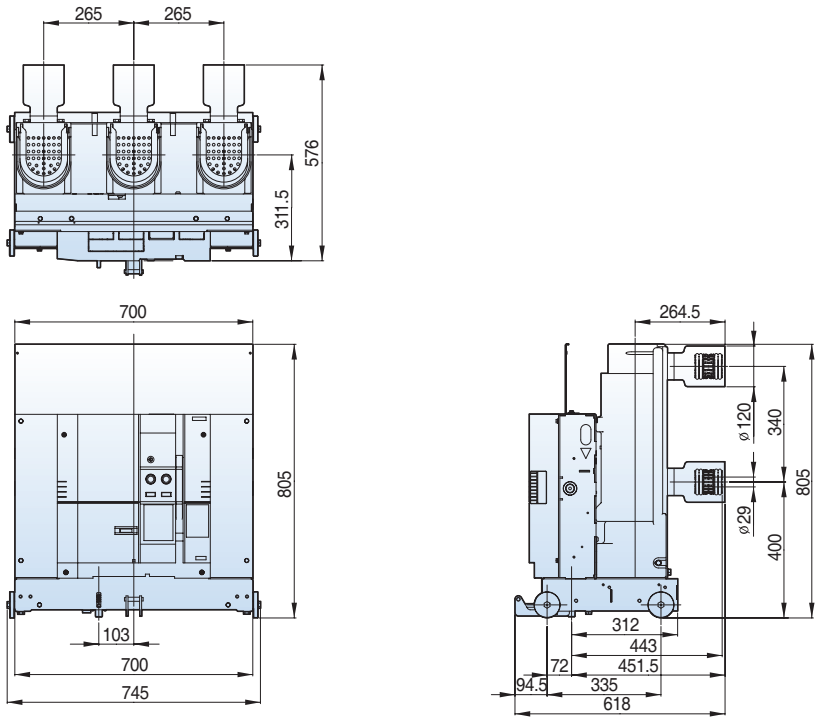

24/25.8kV 12.5kA 630A

Withdrawable

■ F type unit Enclosed, Tulip contact, phase distance 265mm

Type
VL-20F13G06
VL-25F13G06

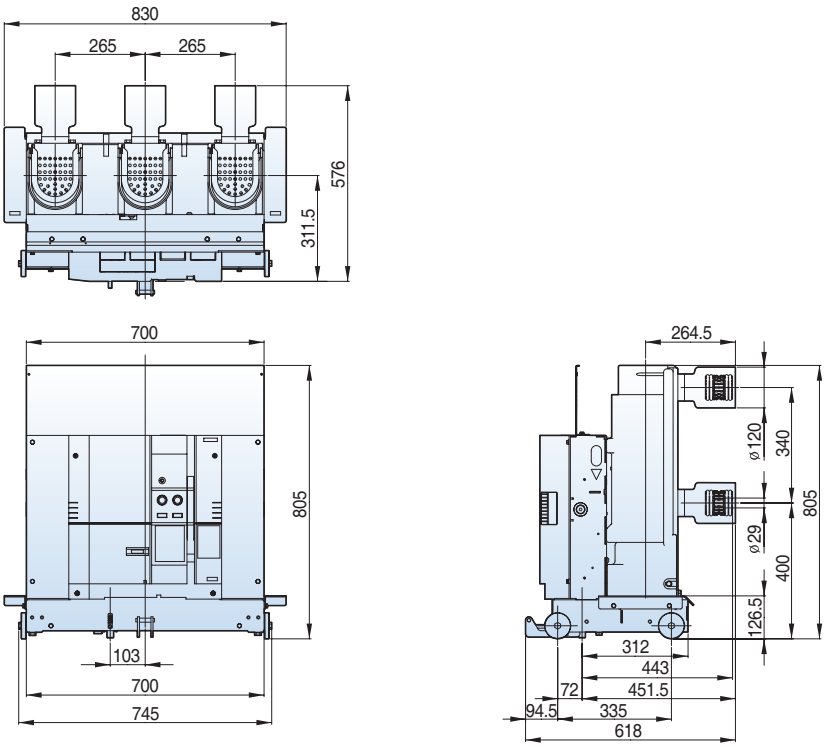

Withdrawable

■ G type unit Tulip contact, phase distance 265mm

Type
VL-20G13F06
VL-25G13F06

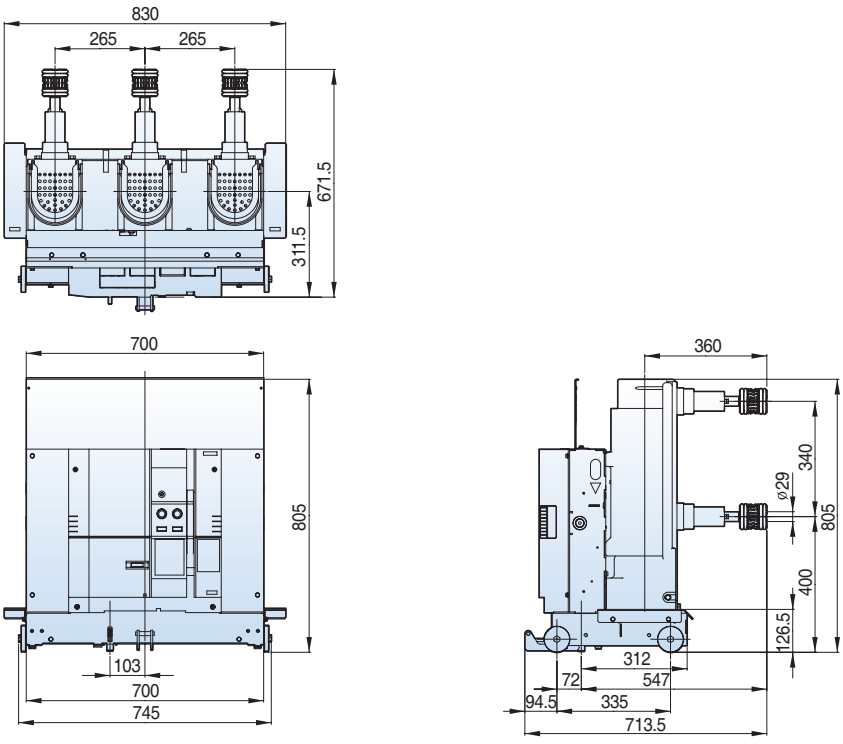

Dimensions - VL type (VL-20/25)

24/25.8kV 12.5kA 630A

Withdrawable

■ G type unit, phase distance 210mm

Type
VL-20G13B06
VL-25G13B06

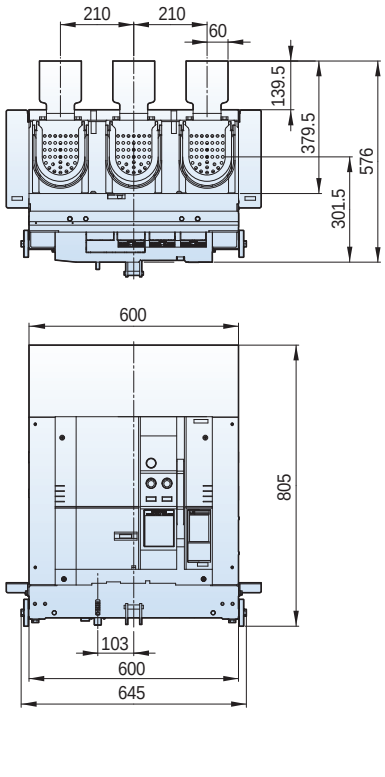

Withdrawable

■ K type unit, phase distance 210mm

Type
VL-20K13B06
VL-25K13B06

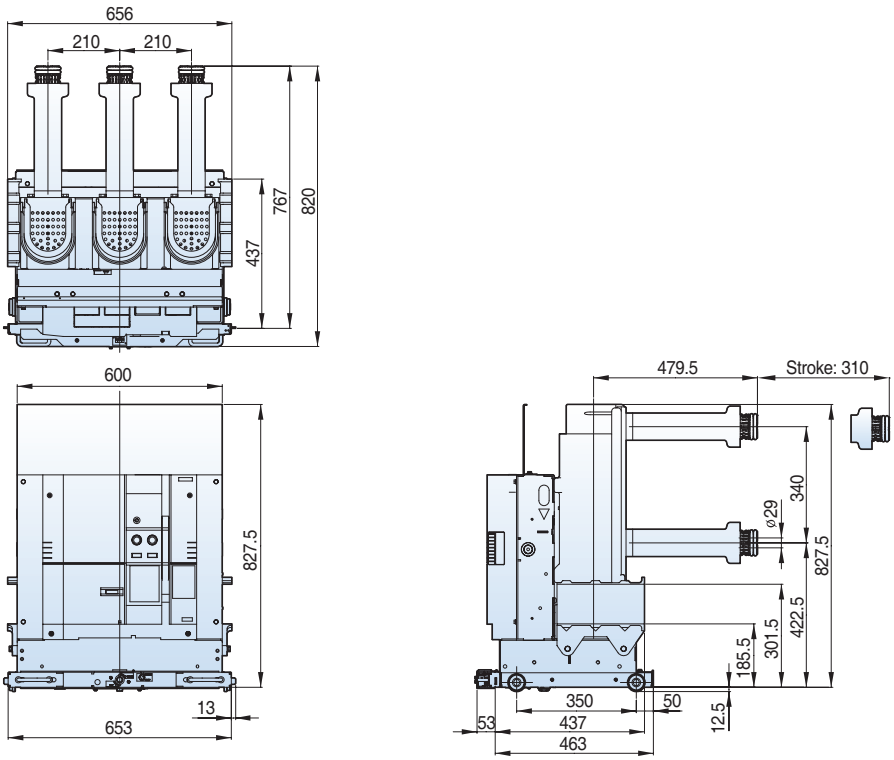

24/25.8kV 12.5kA 630A

Withdrawable

Type
VL-20K13F06
VL-25K13F06

■ K type unit, phase distance 265mm

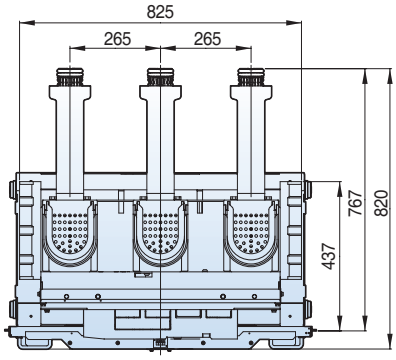

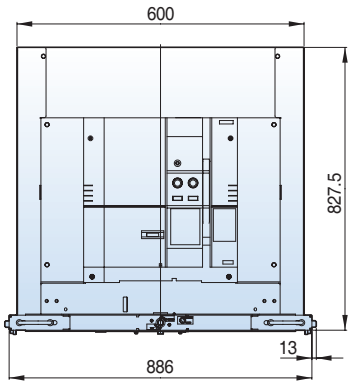

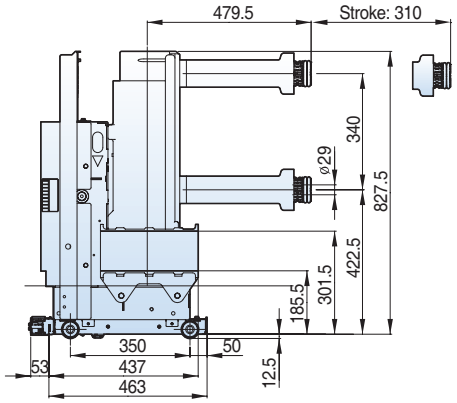

Withdrawable

Type
VL-20H13B06
VL-25H13B06

■ H type unit, phase distance 210mm

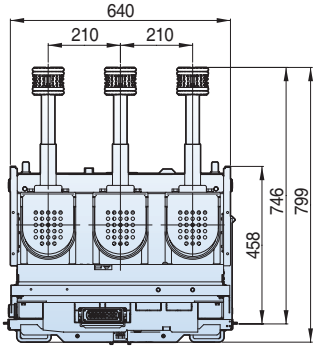

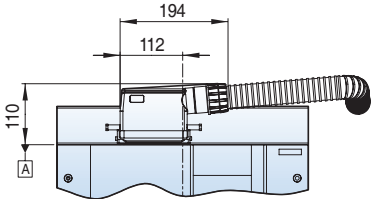

Note) Please be informed that When B-type connecter is used to design switchgears, the height can be 110mm higher based on "A"

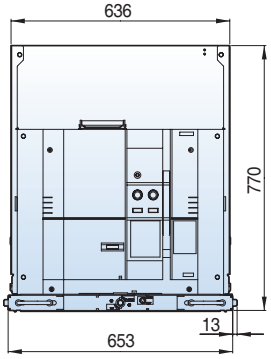

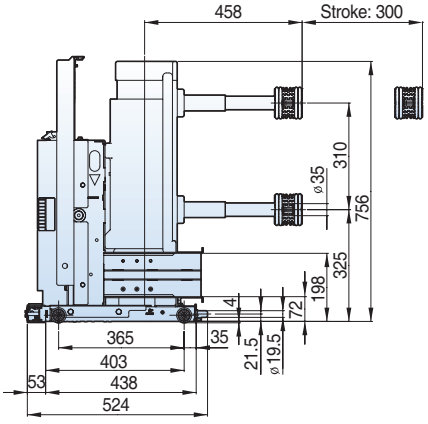

Dimensions - VL type (VL-20/25)

24/25.8kV 12.5kA 630A

Withdrawable

Type
VL-20H13D06
VL-25H13D06

■ H type unit, phase distance 275mm

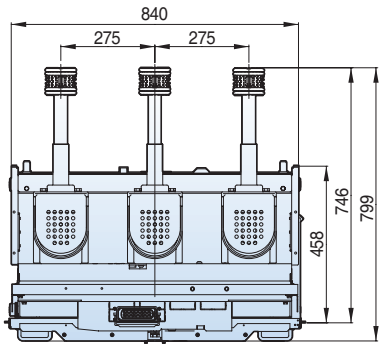

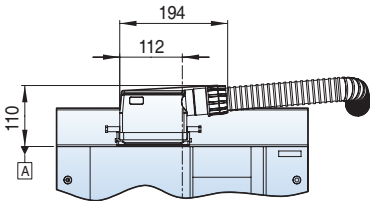

Note) Please be informed that When B-type connecter is used to design switchgears, the height can be 110mm higher based on "A"

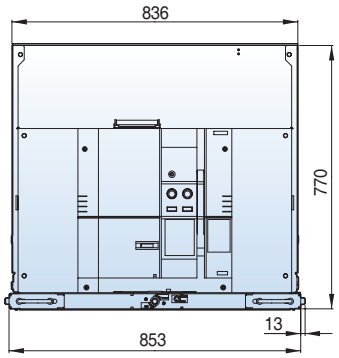

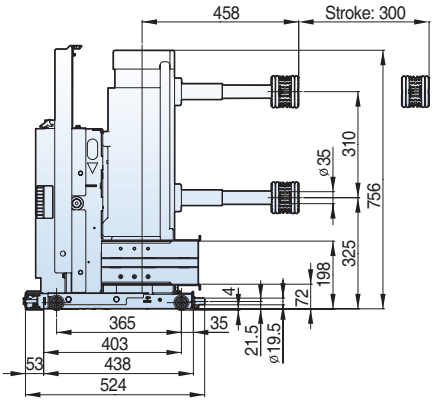

24/25.8kV 12.5kA 1250A

Fixed

Type
VL-20P13F13
VL-25P13F13

■ P type, phase distance 265mm

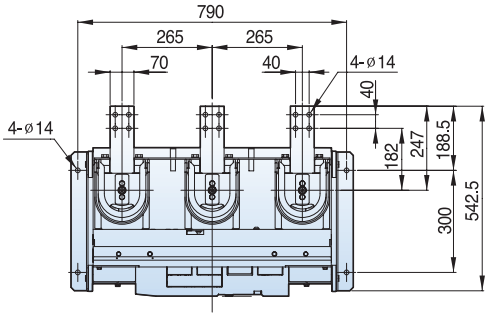

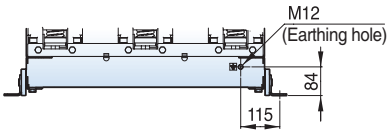

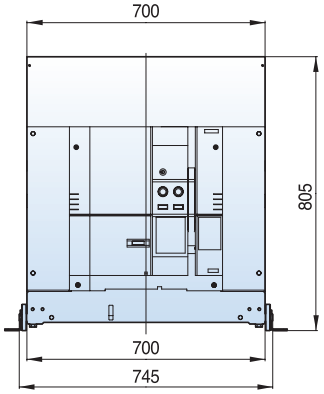

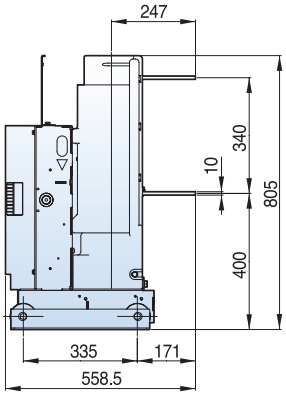

24/25.8kV 12.5kA 1250A

Withdrawable

Type
VL-20E13F13
VL-25E13F13

■ E type unit Visible, Clip contact, phase distance 265mm

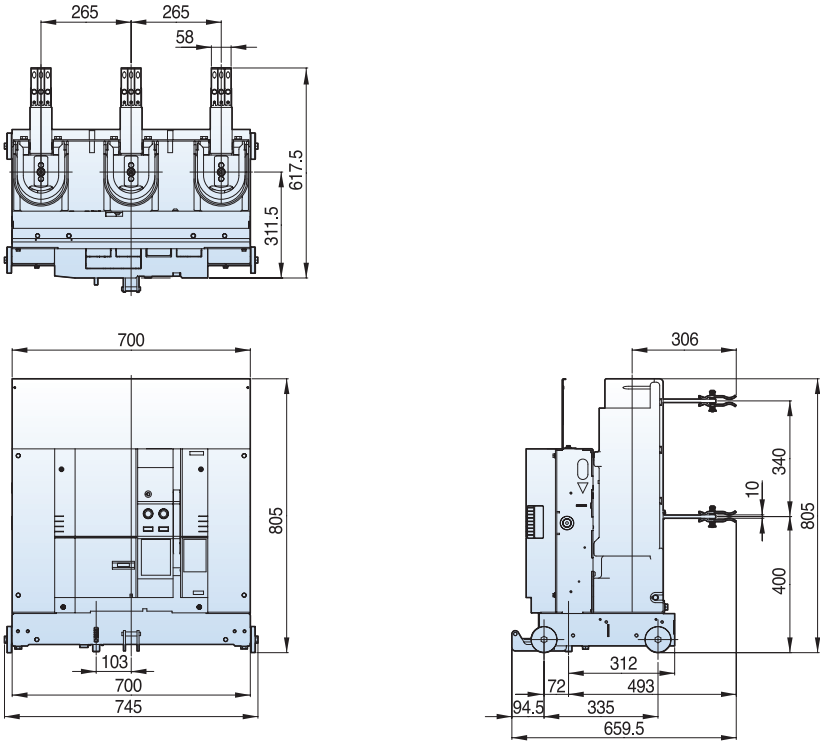

Withdrawable

Type
VL-20F13F13
VL-25F13F13

■ F type unit Visible, Clip contact, phase distance 265mm

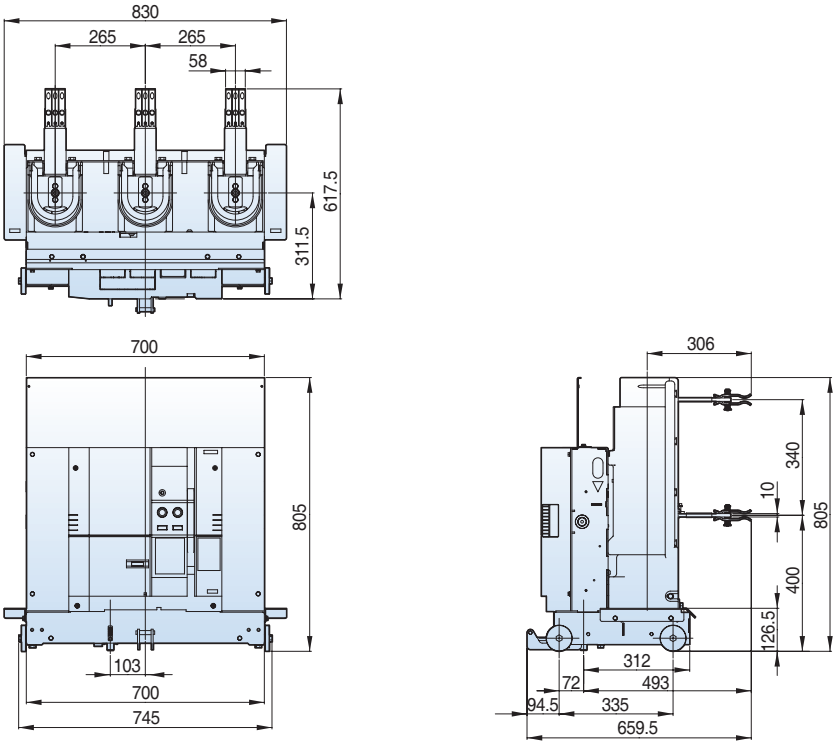

Dimensions - VL type (VL-20/25)

24/25.8kV 12.5kA 1250A

Withdrawable

■ E type unit Enclosed, Tulip contact, phase distance 265mm

Type
VL-20E13G13
VL-25E13G13

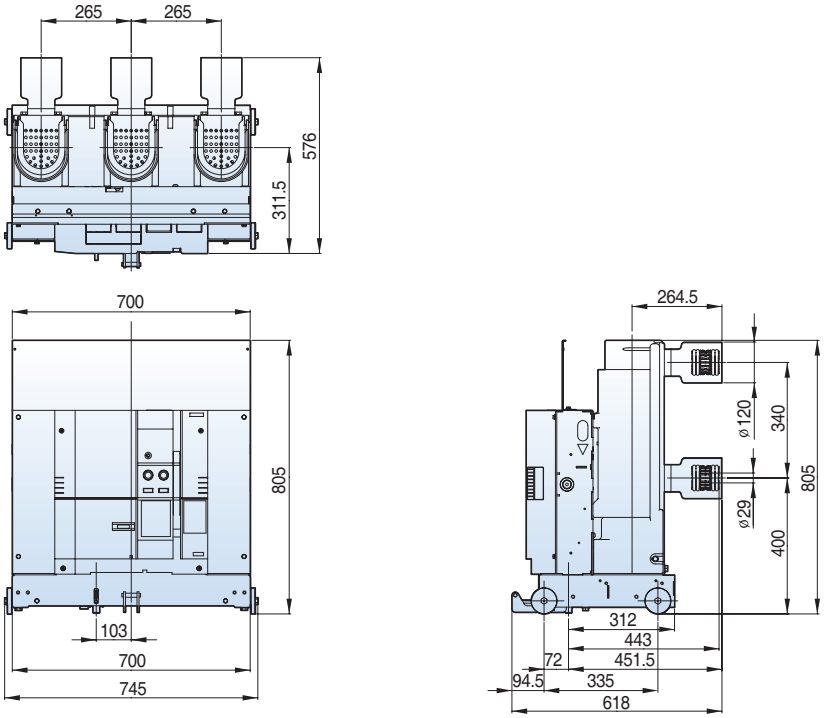

Withdrawable

■ F type unit Enclosed, Tulip contact, phase distance 265mm

Type
VL-20F13G13
VL-25F13G13

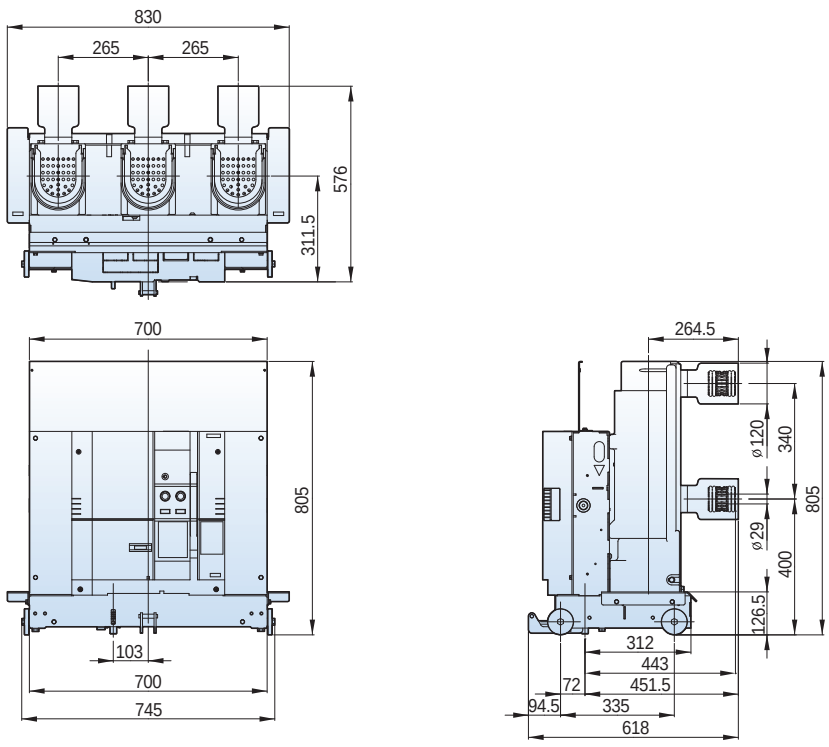

24/25.8kV 12.5kA 1250A

Withdrawable

Type
VL-20G13F13
VL-25G13F13

■ G type unit Tulip contact, phase distance 265mm

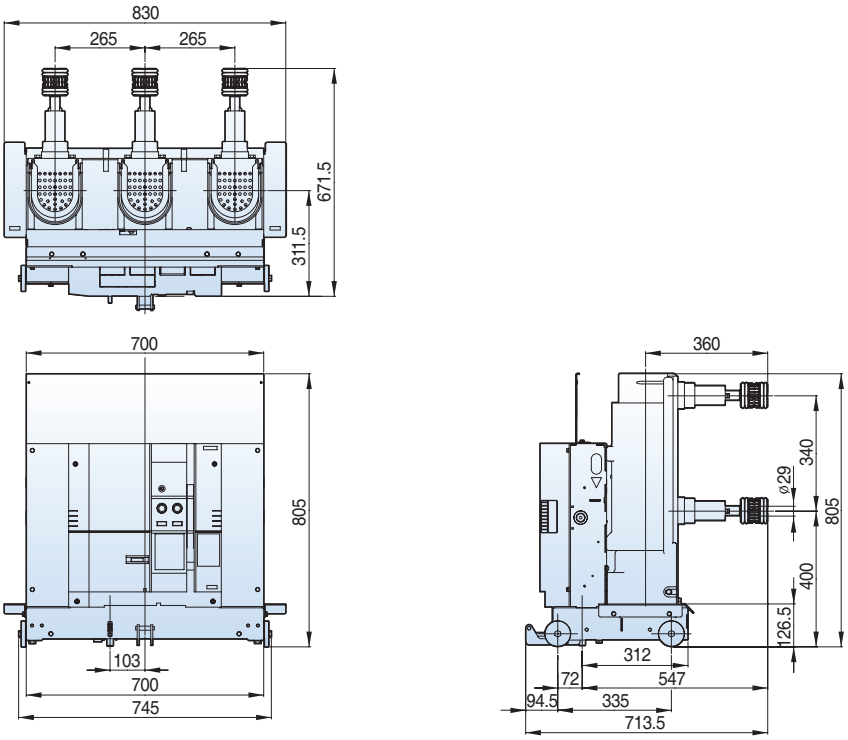

24/25.8kV 12.5kA 1250A & 16/25kA 630/1250A

Withdrawable

Type
VL-20G13B13
VL-25G13B13
VL-20G16B06
VL-20G16B13
VL-20G25B06
VL-20G25B13
VL-25G16B06
VL-25G16B13
VL-25G25B06
VL-25G25B13

■ G type unit, phase distance 210mm

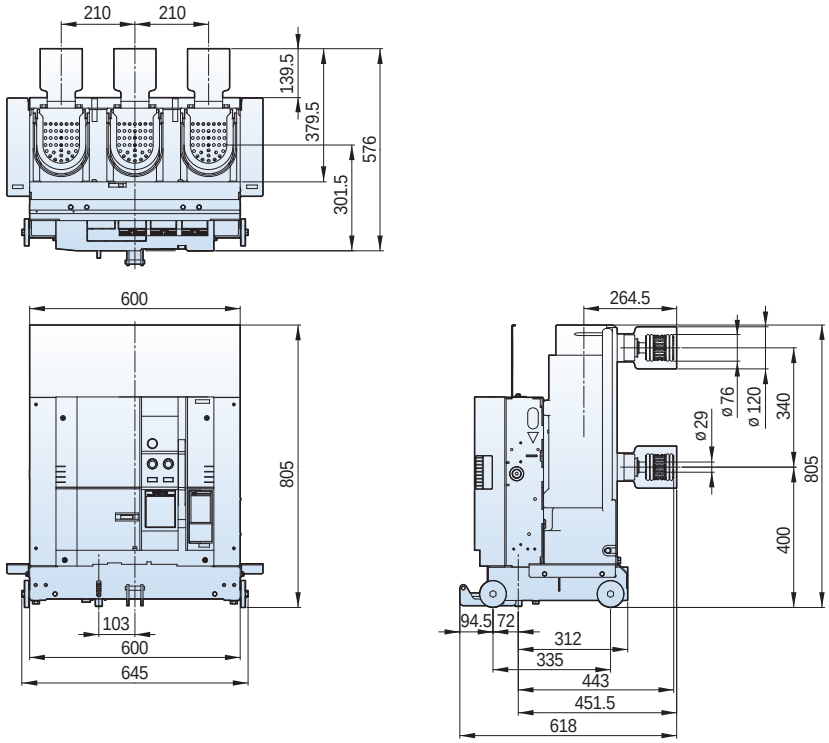

Dimensions - VL type (VL-20/25)

24/25.8kV 12.5kA 1250A

Withdrawable

■ K type unit, phase distance 210mm

Type
VL-20K13B13
VL-25K13B13

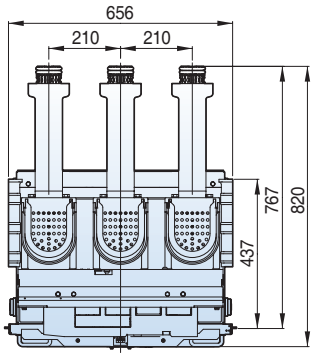

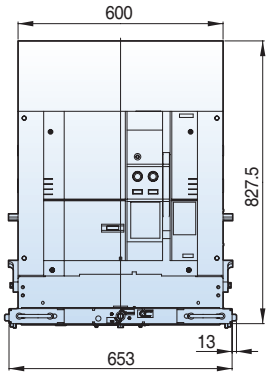

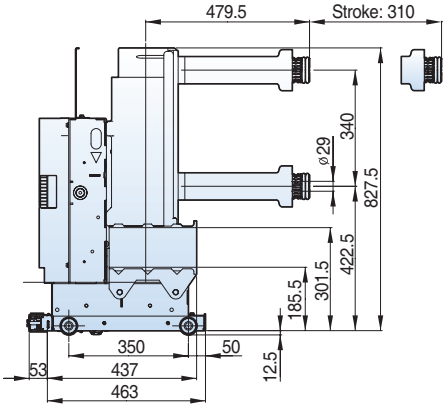

Withdrawable

■ K type unit, phase distance 265mm

Type
VL-20K13F13
VL-25K13F13

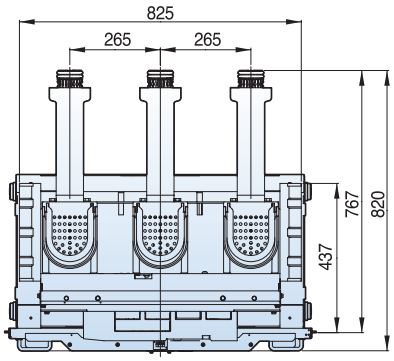

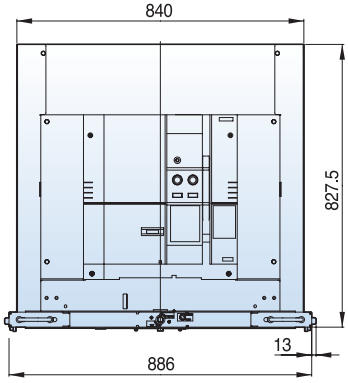

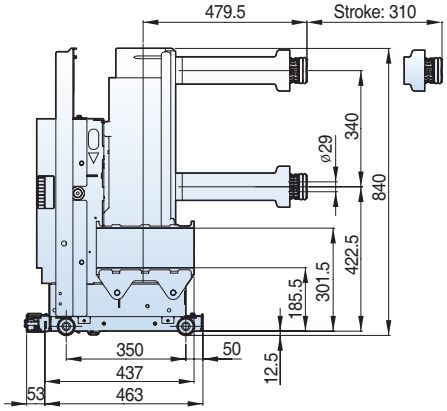

24/25.8kV 12.5kA 1250A

Withdrawable

Type
VL-20H13B13
VL-25H13B13

■ H type unit, phase distance 210mm

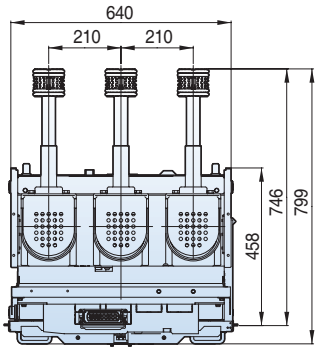

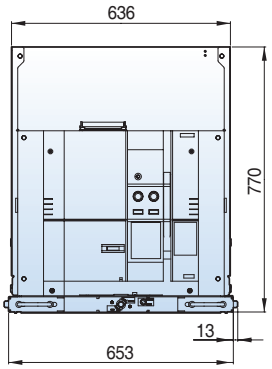

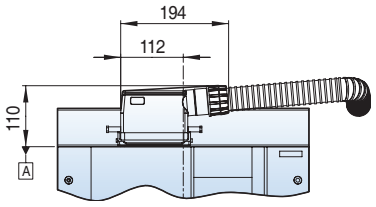

Note) Please be informed that When B-type connecter is used to design switchgears, the height can be 110mm higher based on "A"

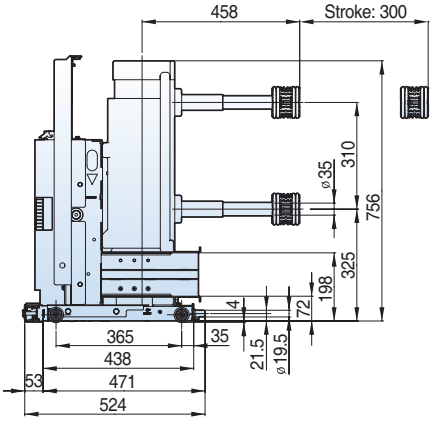

Withdrawable

Type
VL-20H13D13
VL-25H13D13

■ H type unit, phase distance 275mm

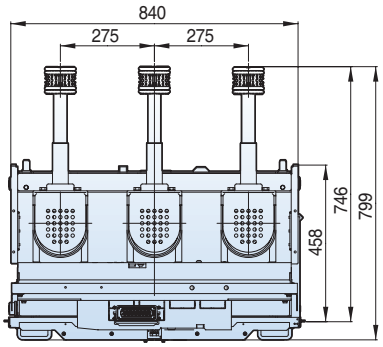

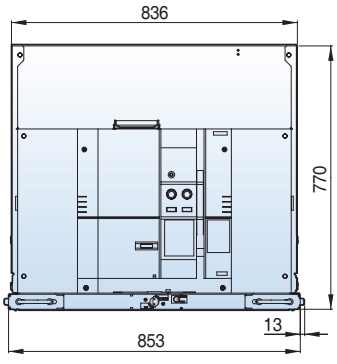

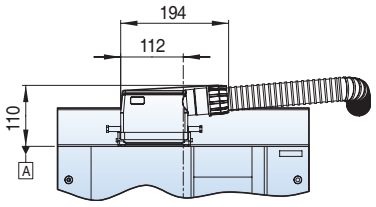

Note) Please be informed that When B-type connecter is used to design switchgears, the height can be 110mm higher based on "A"

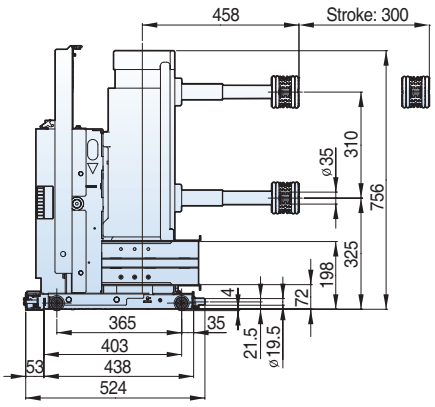

Dimensions - VL type (VL-20/25)

24/25.8kV 16/25kA 630A

Fixed

Type
VL-20P16F06
VL-20P25F06
VL-25P16F06
VL-25P25F06

■ P type, phase distance 265mm

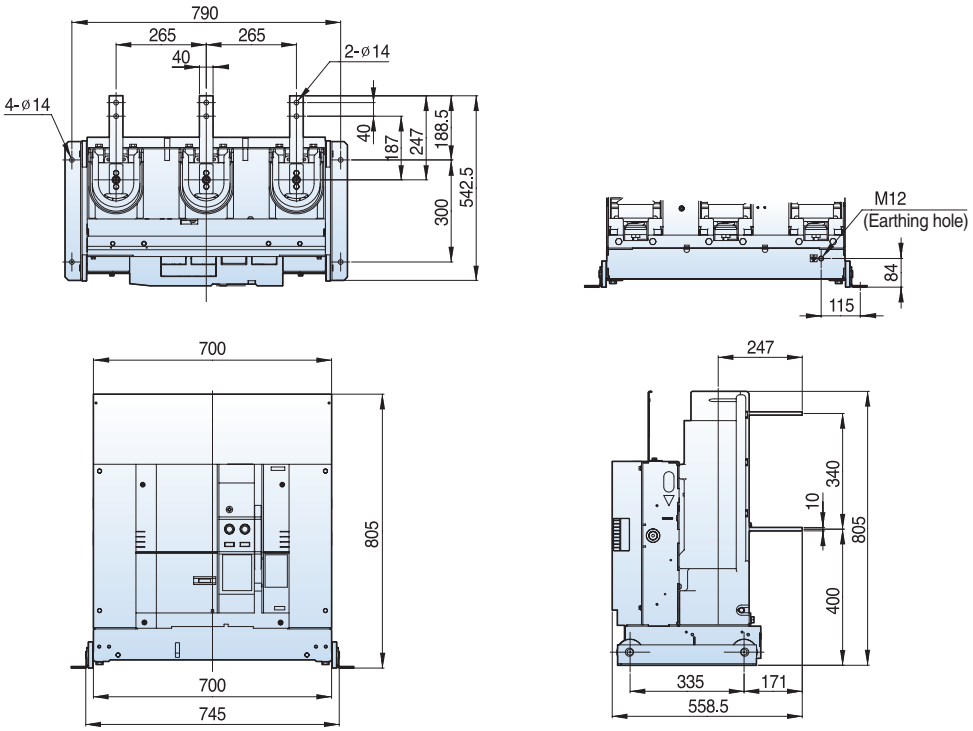

24/25.8kV 16kA 630A

Withdrawable

Type
VL-20E16F06
VL-25E16F06

■ E type unit Visible, Clip contact, phase distance 265mm

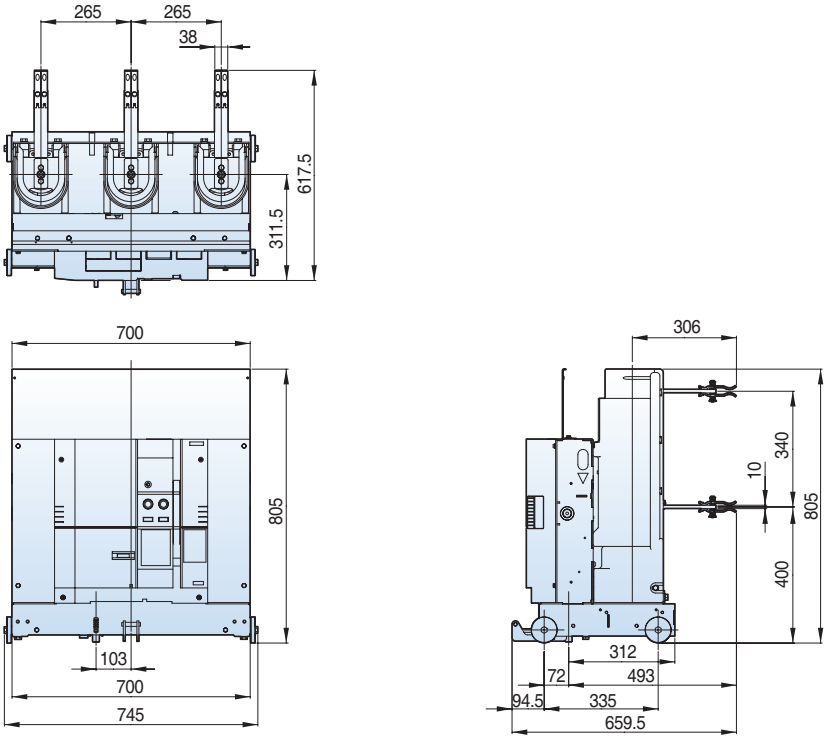

24/25.8kV 16kA 630A

Withdrawable

Type
VL-20F16F06
VL-25F16F06

■ F type unit Visible, Clip contact, phase distance 265mm

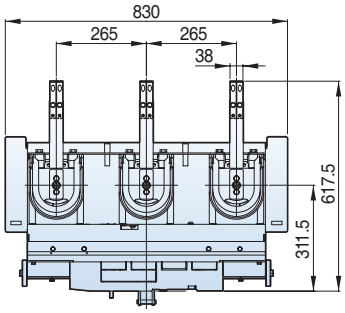

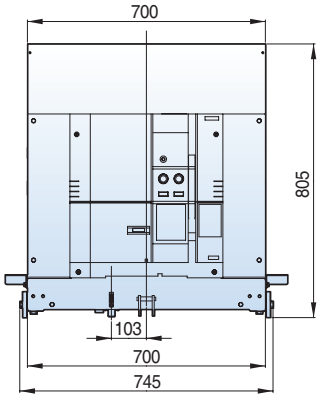

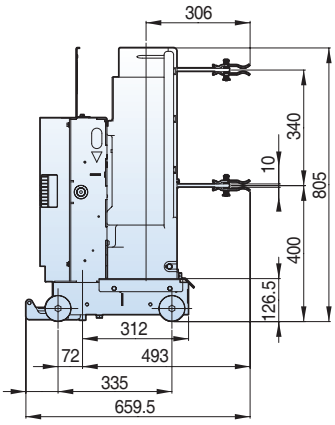

24/25.8kV 16/25kA 1250A

Fixed

Type
VL-20P16F13
VL-20P25F13
VL-25P16F13
VL-25P25F13

■ P type, phase distance 265mm

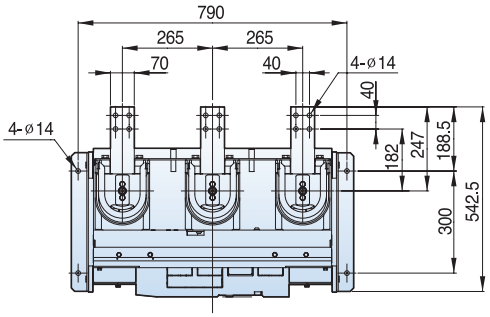

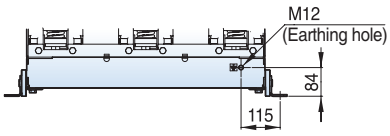

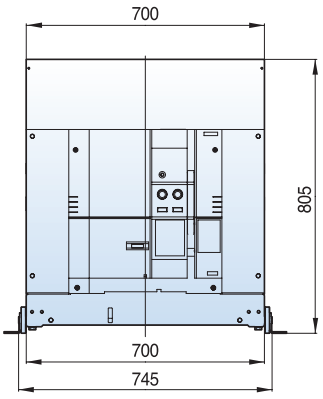

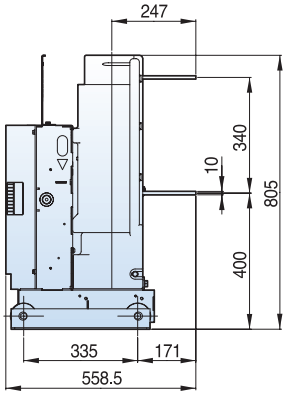

Dimensions - VL type (VL-20/25)

24/25.8kV 25kA 630A & 24/25.8kV 16/25kA 1250A

Withdrawable

■ E type unit Visible, Clip contact, phase distance 265mm

Type
VL-20E25F06
VL-25E25F06
VL-20E16F13
VL-20E25F13
VL-25E16F13
VL-25E25F13

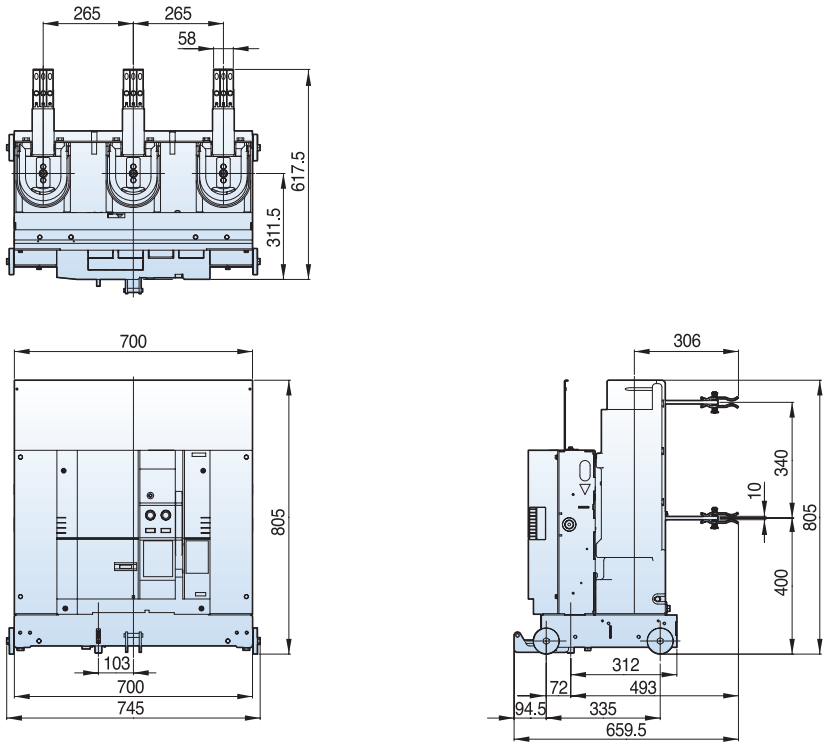

Withdrawable

■ F type unit Visible, Clip contact, phase distance 265mm

Type
VL-20F25F06
VL-25F25F06
VL-20F16F13
VL-20F25F13
VL-25F16F13
VL-25F25F13

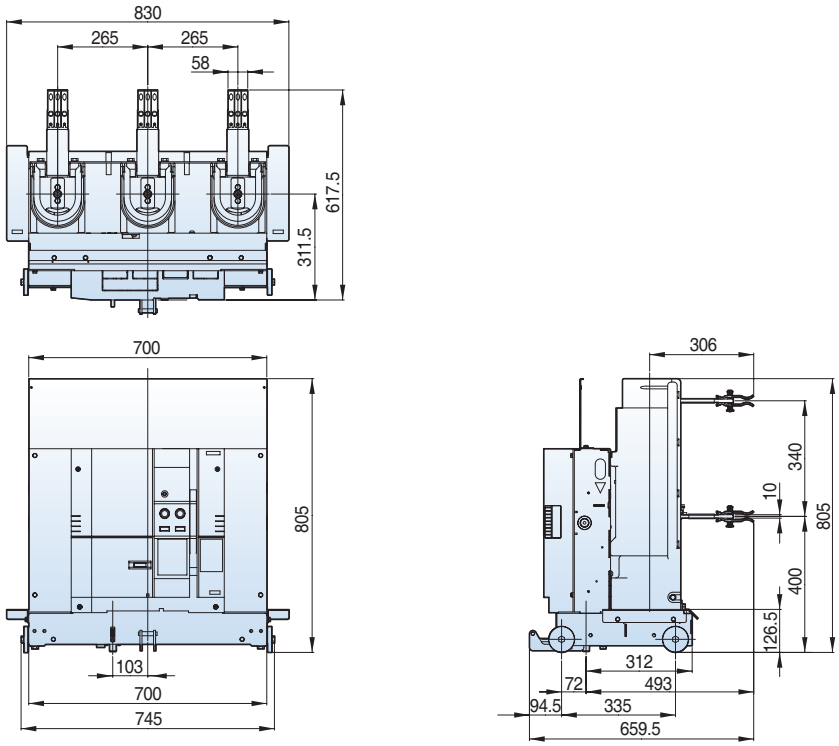

24/25.8kV 16/25kA 630/1250A

Withdrawable

■ E type unit Enclosed, Tulip contact, phase distance 265mm

Type
VL-20E16G06
VL-20E16G13
VL-20E25G06
VL-20E25G13
VL-25E16G06
VL-25E16G13
VL-25E25G06
VL-25E25G13

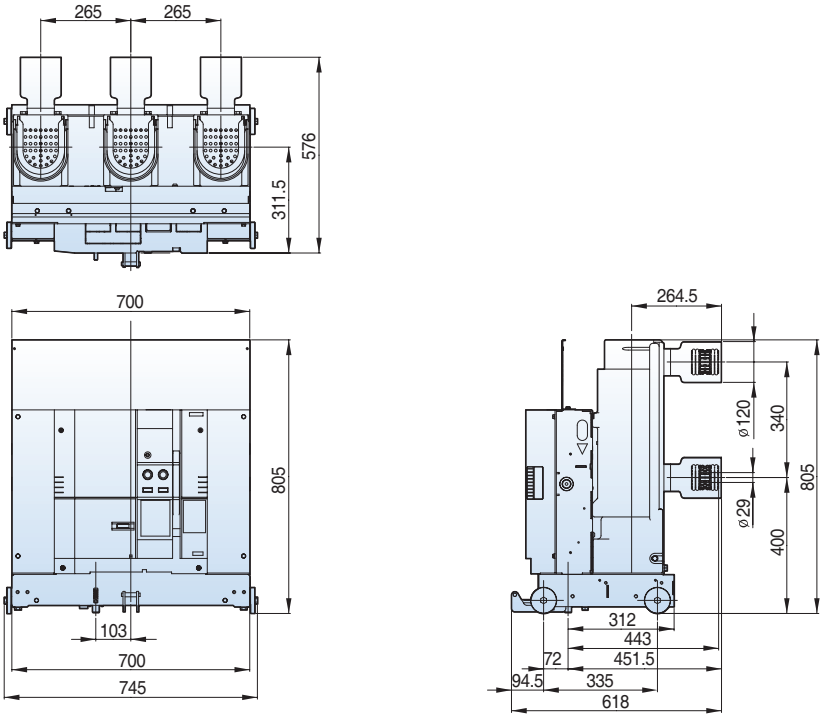

Withdrawable

■ F type unit Enclosed, Tulip contact, phase distance 265mm

Type
VL-20F16G06
VL-20F16G13
VL-20F25G06
VL-20F25G13
VL-25F16G06
VL-25F16G13
VL-25F25G06
VL-25F25G13

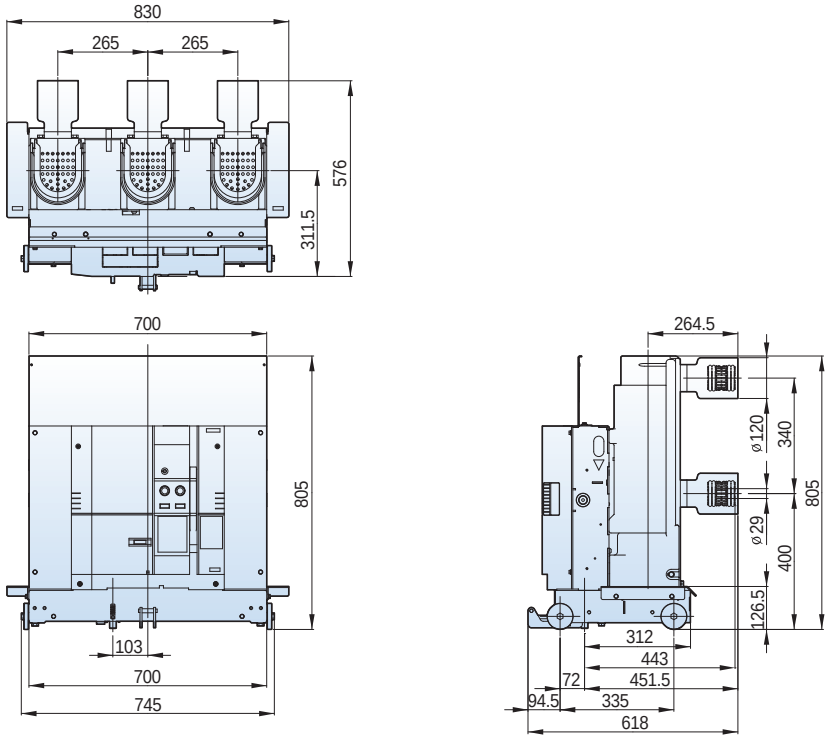

Dimensions - VL type (VL-20/25)

24/25.8kV 16/25kA 630/1250A

Withdrawable

■ G type unit Tulip contact, phase distance 265mm

Type
VL-20G16F06
VL-20G16F13
VL-20G25F06
VL-20G25F13
VL-25G16F06
VL-25G16F13
VL-25G25F06
VL-25G25F13

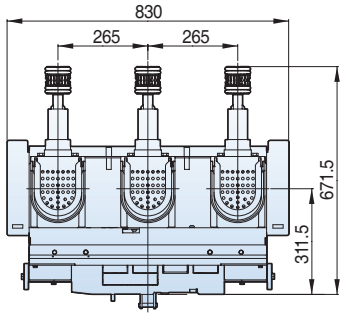

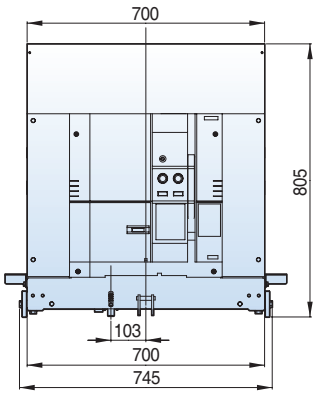

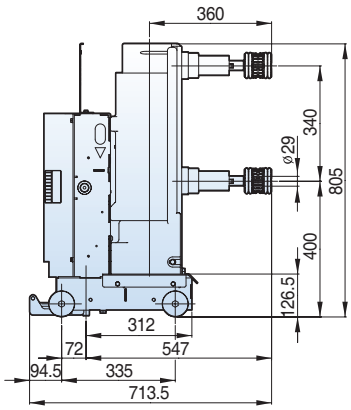

Withdrawable

■ K type unit, phase distance 210mm

Type
VL-20K16B06
VL-20K16B13
VL-20K25B06
VL-20K25B13
VL-25K16B06
VL-25K16B13
VL-25K25B06
VL-25K25B13

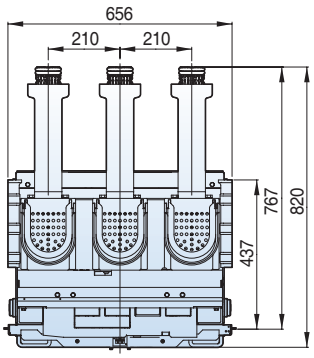

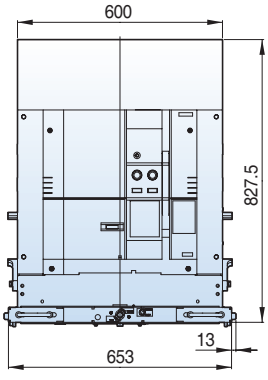

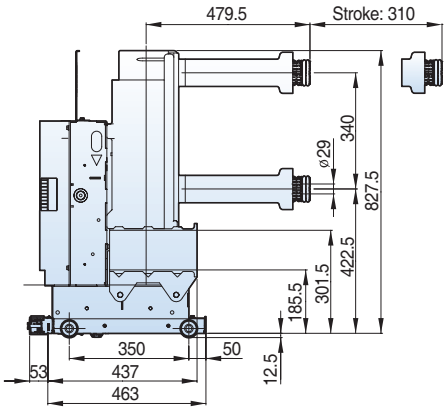

24/25.8kV 16/25kA 630/1250A

Withdrawable

■ K type unit, phase distance 265mm

Type
VL-20K16F06
VL-20K16F13
VL-20K25F06
VL-20K25F13
VL-25K16F06
VL-25K16F13
VL-25K25F06
VL-25K25F13

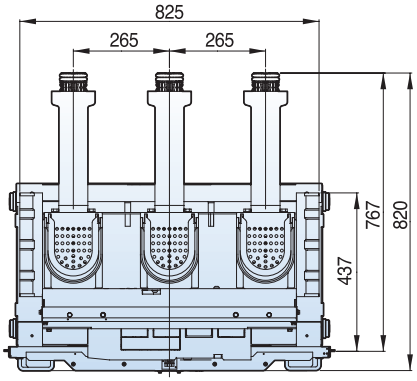

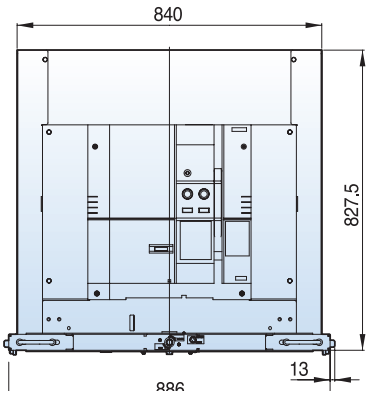

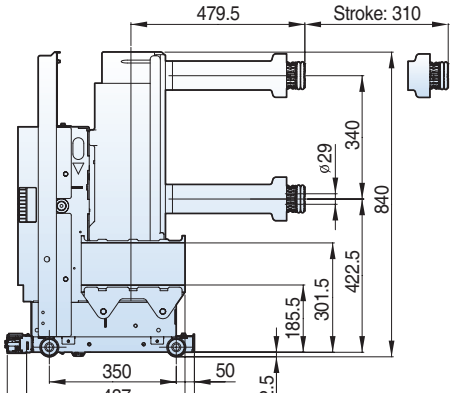

Withdrawable

■ H type unit, phase distance 210mm

Type
VL-20H16B06
VL-20H16B13
VL-20H25B06
VL-20H25B13
VL-25H16B06
VL-25H16B13
VL-25H25B06
VL-25H25B13

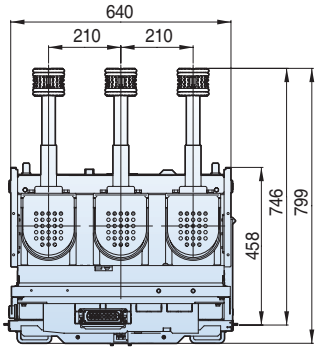

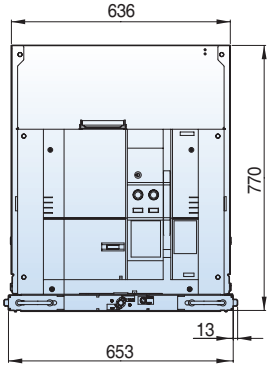

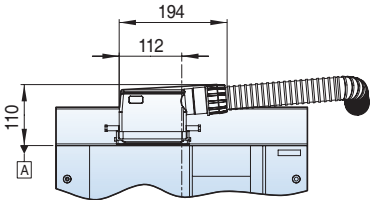

Note) Please be informed that When Q-type connecter is used to design switchgears, the height can be 110mm higher based on "A"

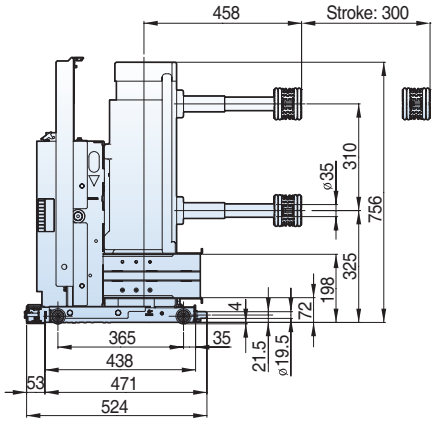

Dimensions - VL type (VL-20/25)

24/25.8kV 16/25kA 630/1250A

Withdrawable

Type
VL-20H16D06
VL-20H16D13
VL-20H25D06
VL-20H25D13
VL-25H16D06
VL-25H16D13
VL-25H25D06
VL-25H25D13

■ H type unit, phase distance 275mm

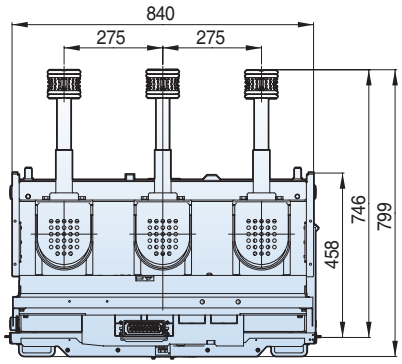

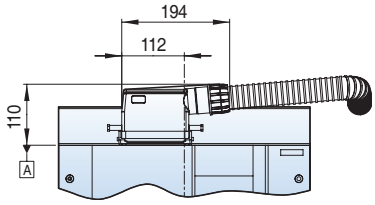

Note) Please be informed that When Q-type connecter is used to design switchgears, the height can be 110mm higher based on "A"

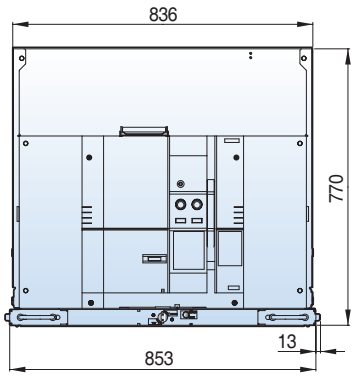

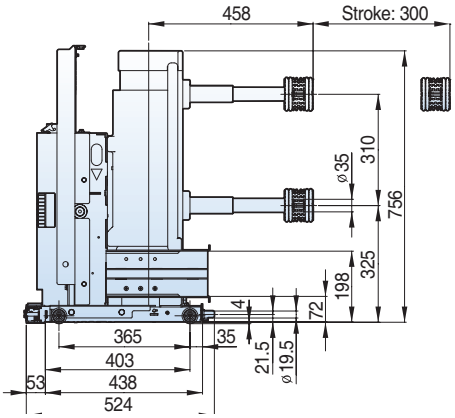

24/25.8kV 25kA 2000A

Fixed

Type
VL-20P25F20
VL-25P25F20

■ P type, phase distance 265mm

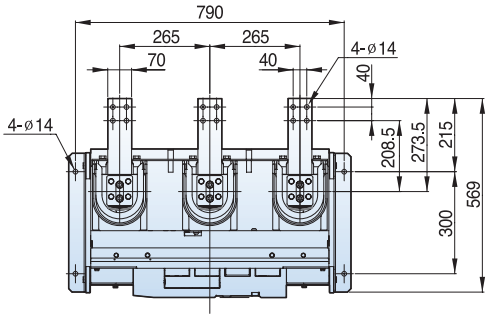

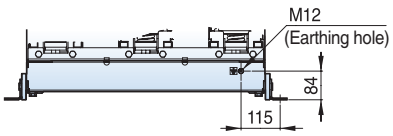

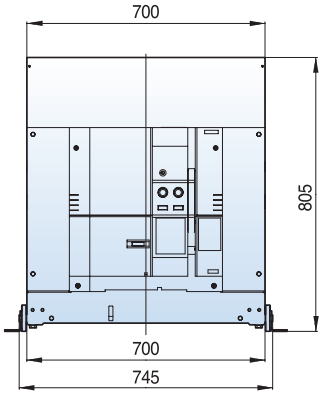

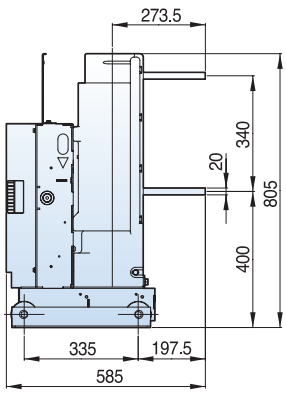

24/25.8kV 25kA 2000A

Withdrawable

Type
VL-20E25F20
VL-25E25F20

■ E type unit Visible, Clip contact, phase distance 265mm

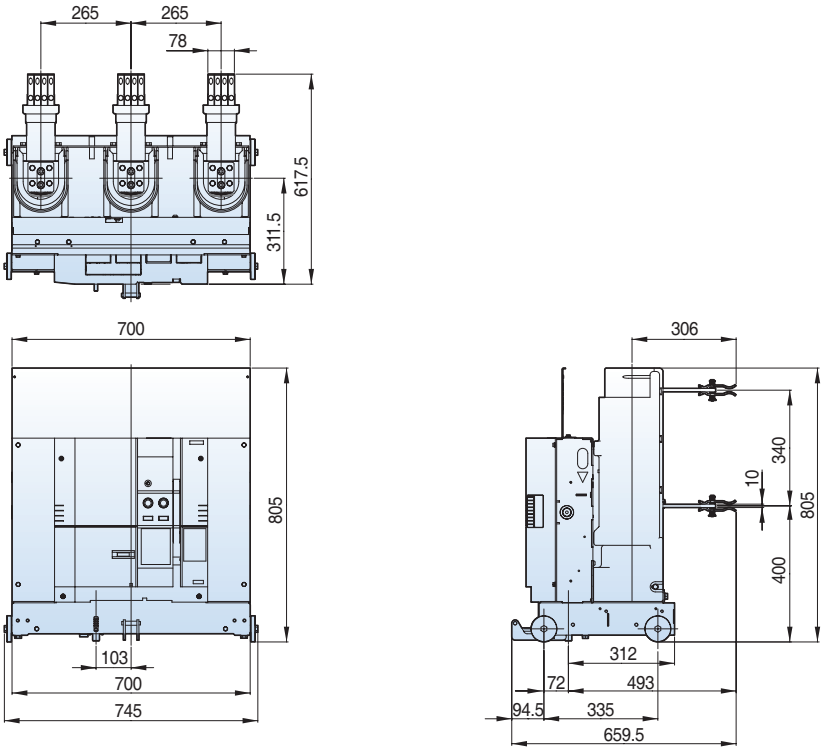

Withdrawable

Type
VL-20F25F20
VL-25F25F20

■ F type unit Visible, Clip contact, phase distance 265mm

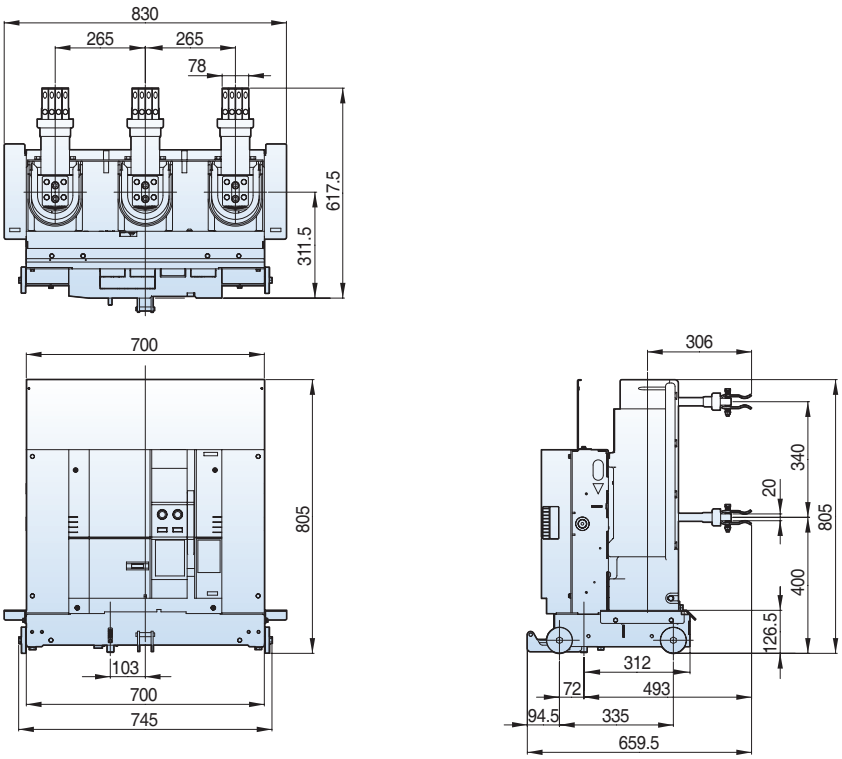

Dimensions - VL type (VL-20/25)

24/25.8kV 25kA 2000A

Withdrawable

■ E type unit Enclosed, Tulip contact, phase distance 265mm

Type
VL-20E25G20
VL-25E25G20

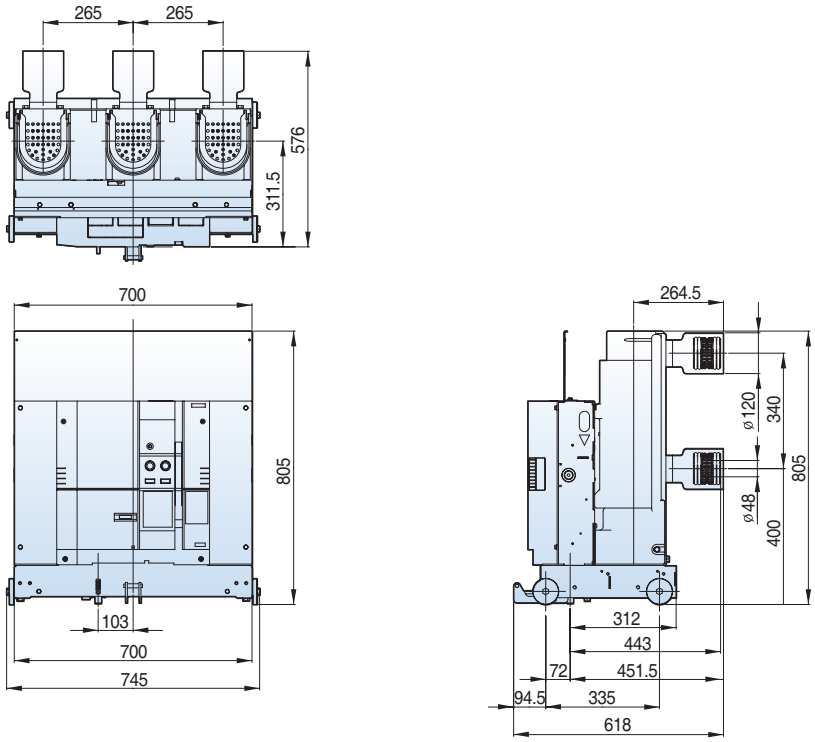

Withdrawable

■ F type unit Enclosed, Tulip contact, phase distance 265mm

Type
VL-20F25G20
VL-25F25G20

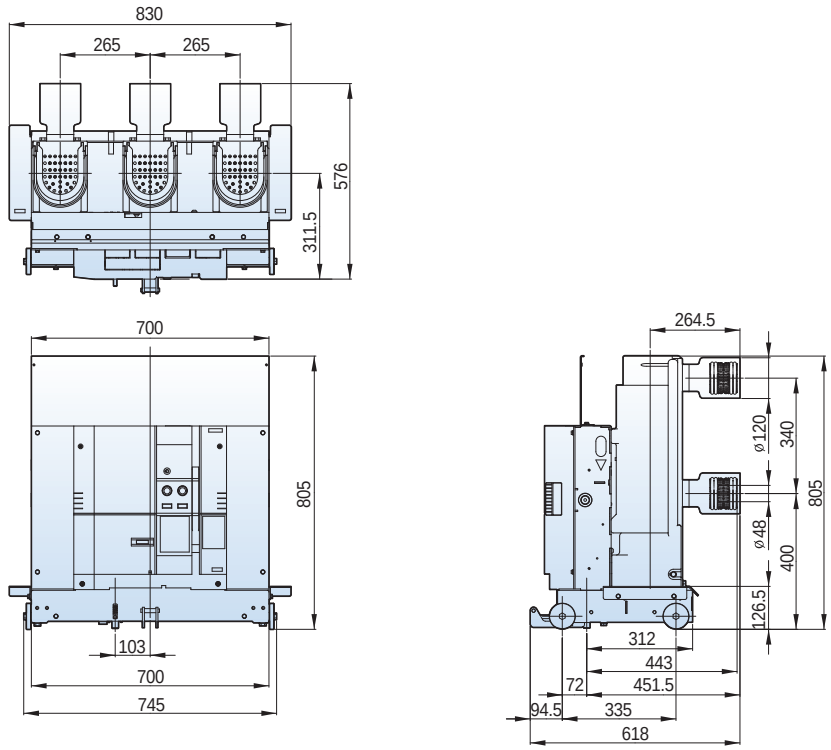

24/25.8kV 25kA 2000A

Withdrawable

Type
VL-20G25B20
VL-25G25B20

■ G type unit, phase distance 210mm

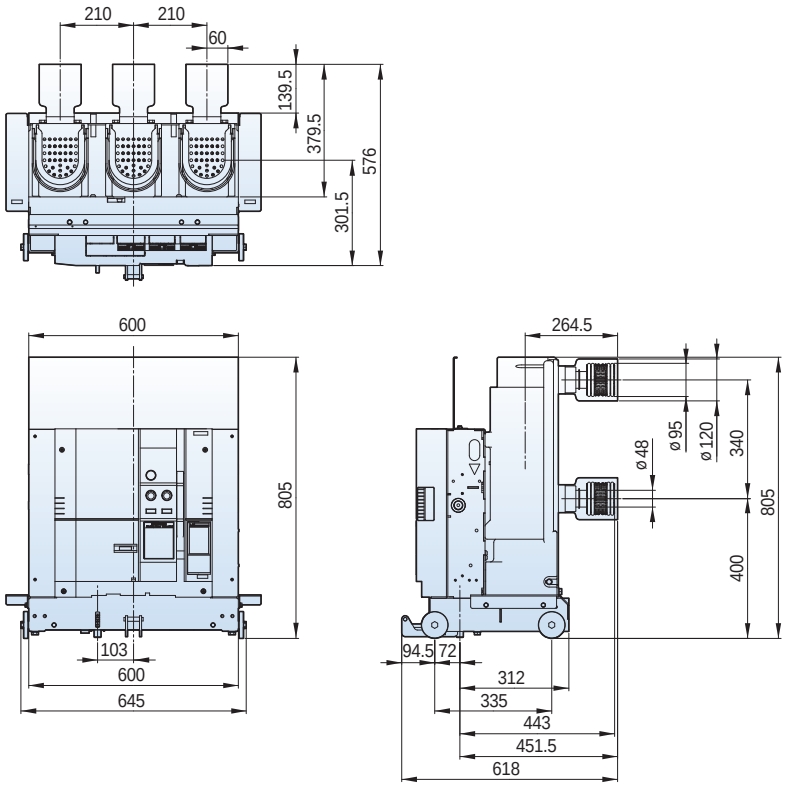

Withdrawable

Type
VL-20K25F20
VL-25K25F20

■ K type unit, phase distance 265mm

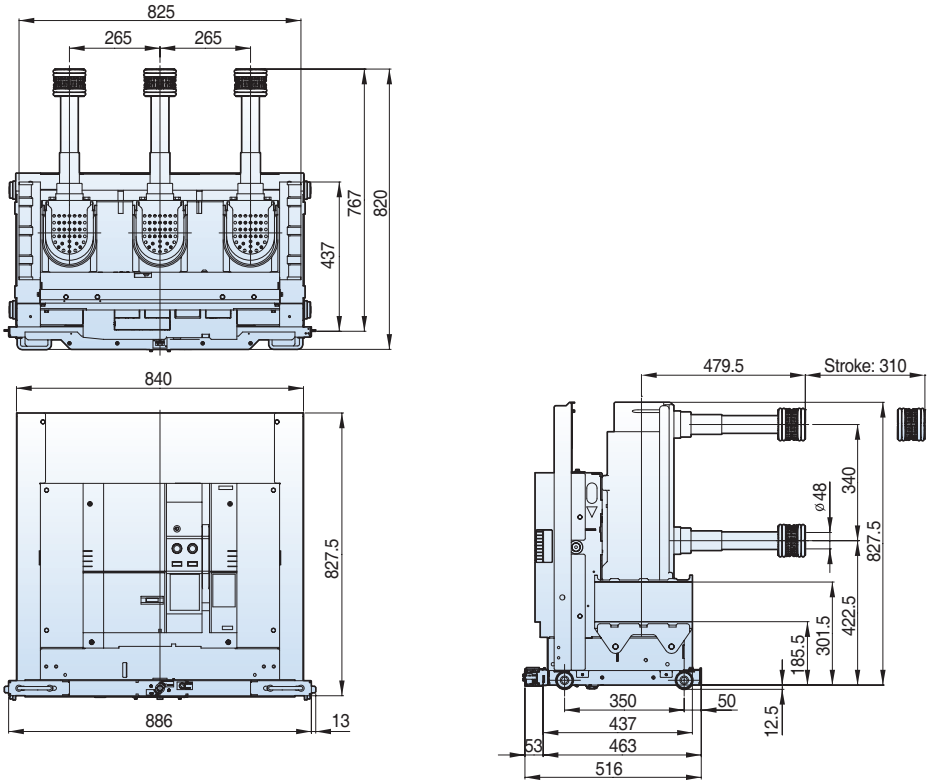

Dimensions - VL type (VL-20/25)

24/25.8kV 25kA 2000A

Withdrawable

■ H type unit, phase distance 210mm

Type
VL-20H25B20
VL-25H25B20

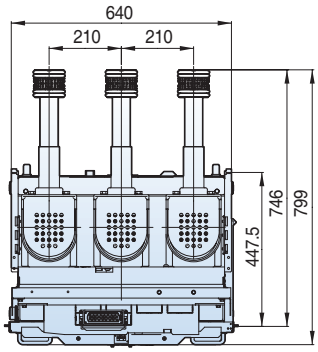

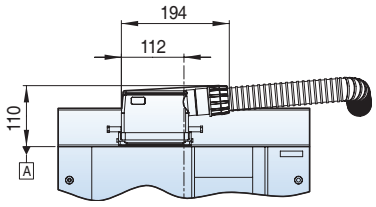

Note) Please be informed that When B-type connecter is used to design switchgears, the height can be 110mm higher based on "A"

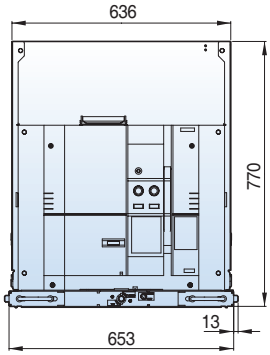

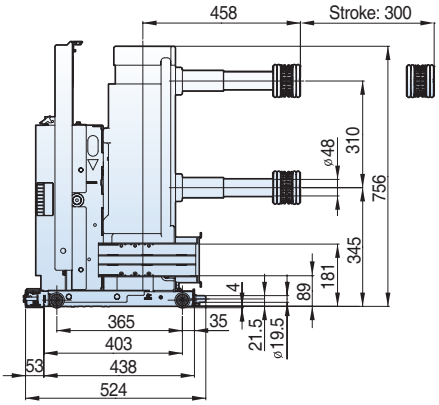

Withdrawable

■ H type unit, phase distance 275mm

Type
VL-20H25D20
VL-25H25D20

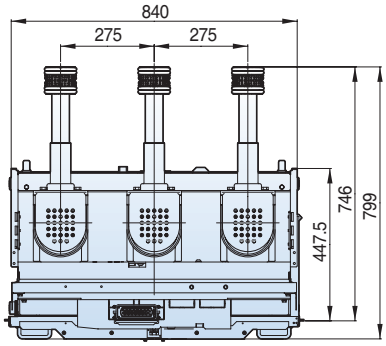

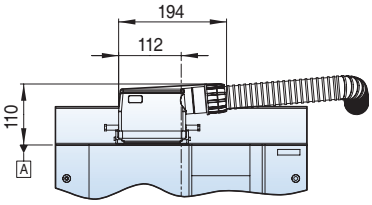

Note) Please be informed that When B-type connecter is used to design switchgears, the height can be 110mm higher based on "A"

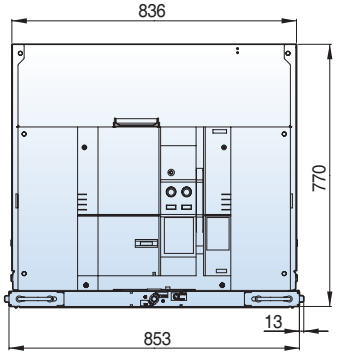

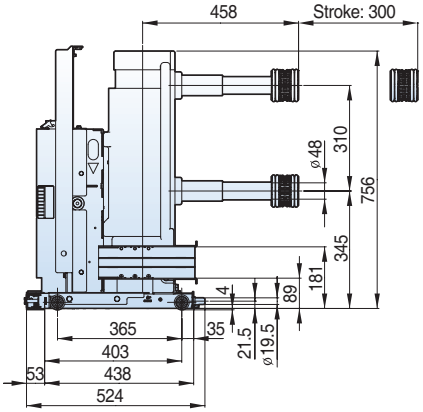

24/25.8kV 25kA 2500A

Withdrawable

Type
VL-20H25D25
VL-25H25D25

■ H type unit, phase distance 275mm

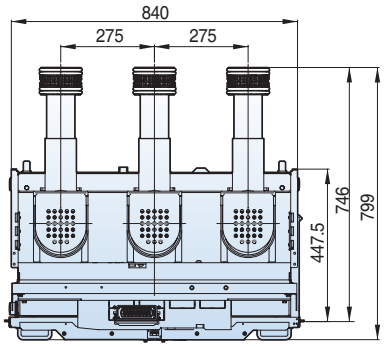

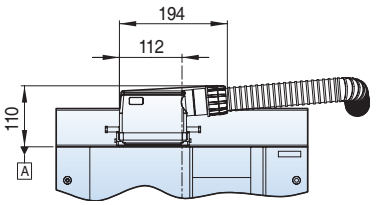

Note) Please be informed that When B-type connecter is used to design switchgears, the height can be 110mm higher based on "A"

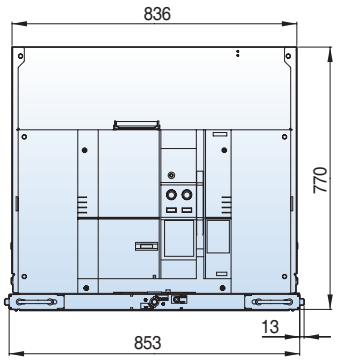

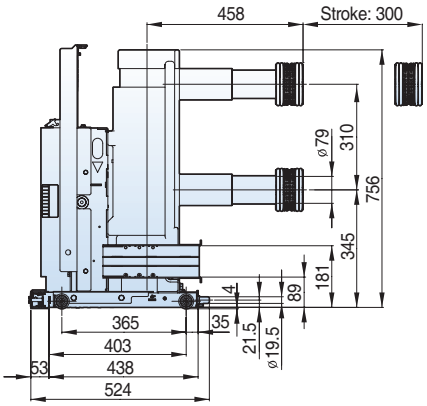

24/25.8kV 12.5/16/25kA 630/1250/2000A

Withdrawable

Type
VCL-20E13F06
VCL-20E13F13
VCL-20E16F06
VCL-20E16F13
VCL-20E25F06
VCL-20E25F13
VCL-20E25F20
VCL-25E13F06
VCL-25E13F13
VCL-25E16F06
VCL-25E16F13
VCL-25E25F06
VCL-25E25F13
VCL-25E25F20

■ E type cradle Visible, Clip contact, phase distance 265mmm

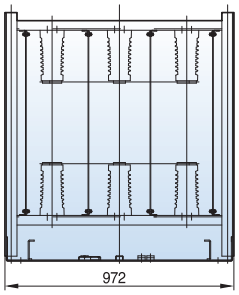

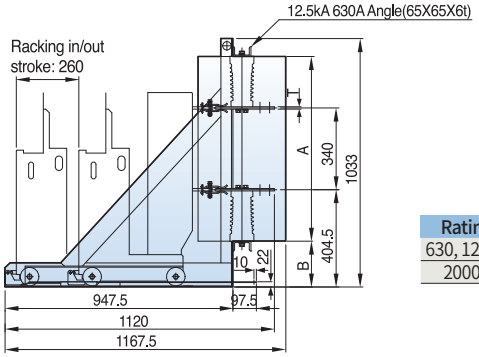

Rating	A	B	T
630, 1250A	768	190.5	10
2000A	778	185.5	20

<Terminal conductor>

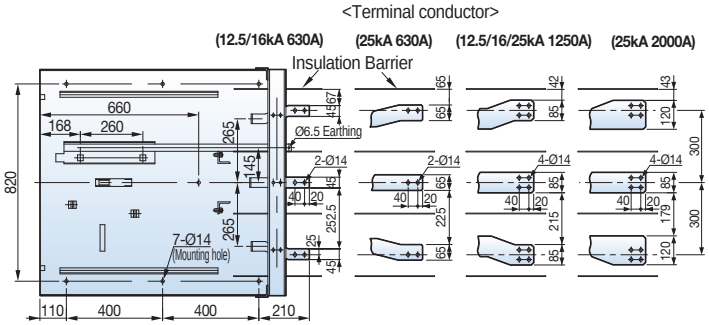

<Earthing terminal>

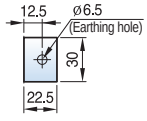

Note) The phase insulation barrier is not applied to product with 24/25.8kV, 12.5/16kA and 630A rating.

Dimensions - VL type (VL-20/25)

24/25.8kV 12.5/16/25kA 630/1250/2000A

Withdrawable

Type
VCL-20F13F06
VCL-20F13F13
VCL-20F16F06
VCL-20F16F13
VCL-20F25F06
VCL-20F25F13
VCL-20F25F20
VCL-25F13F06
VCL-25F13F13
VCL-25F16F06
VCL-25F16F13
VCL-25F25F06
VCL-25F25F13
VCL-25F25F20

■ F type cradle Visible, Clip contact, phase distance 265mm

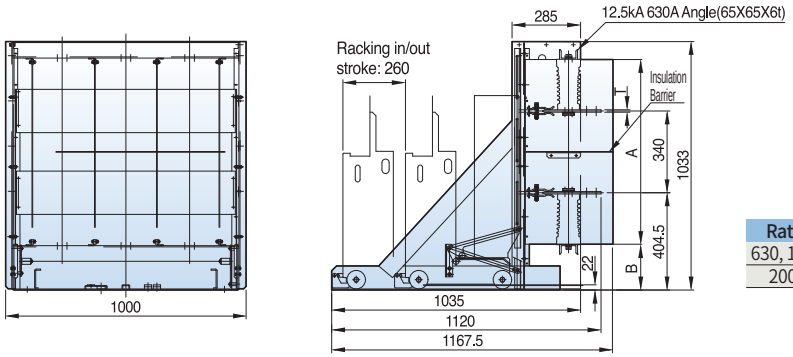

Rating	A	B	T
630, 1250A	768	190.5	10
2000A	778	185.5	20

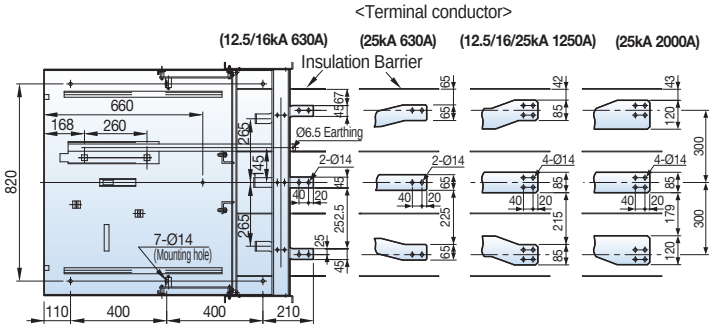

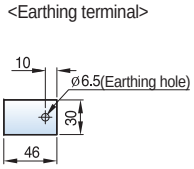

Note) The phase insulation barrier is not applied to product with 24/25.8kV, 12.5/16kA and 630A rating.

24/25.8kV 12.5/16/25kA 630/1250/2000A

Withdrawable

Type
VCL-20E13G06
VCL-20E13G13
VCL-20E16G06
VCL-20E16G13
VCL-20E25G06
VCL-20E25G13
VCL-20E25G20
VCL-25E13G06
VCL-25E13G13
VCL-25E16G06
VCL-25E16G13
VCL-25E25G06
VCL-25E25G13
VCL-25E25G20

■ E type cradle Enclosed, Tulip contact, phase distance 265mm

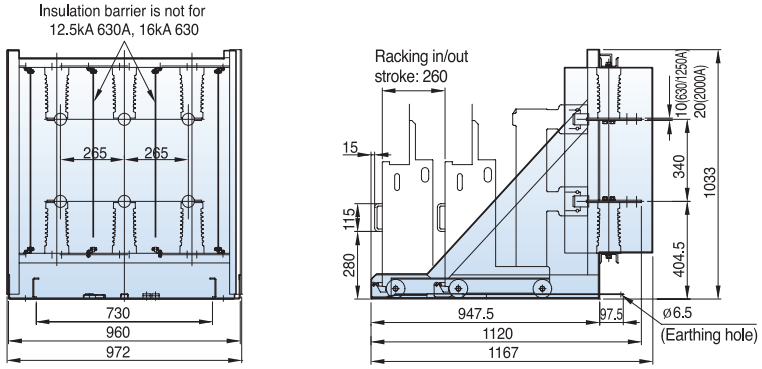

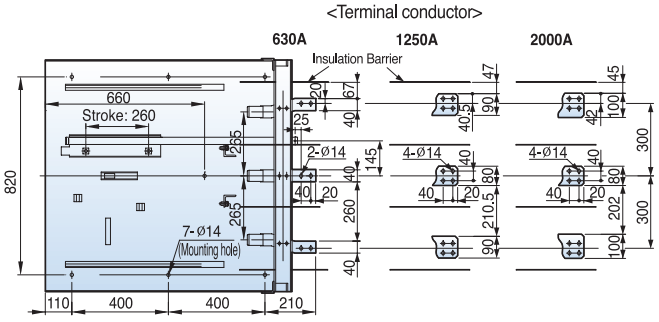

Note) The phase insulation barrier is not applied to product with 24/25.8kV, 12.5/16kA and 630A rating.

24/25.8kV 12.5/16/25kA 630/1250/2000A

Withdrawable

■ F type cradle Enclosed, Tulip contact, phase distance 265mm

Type
VCL-20F13G06
VCL-20F13G13
VCL-20F16G06
VCL-20F16G13
VCL-20F25G06
VCL-20F25G13
VCL-20F25G20
VCL-25F13G06
VCL-25F13G13
VCL-25F16G06
VCL-25F16G13
VCL-25F25G06
VCL-25F25G13
VCL-25F25G20

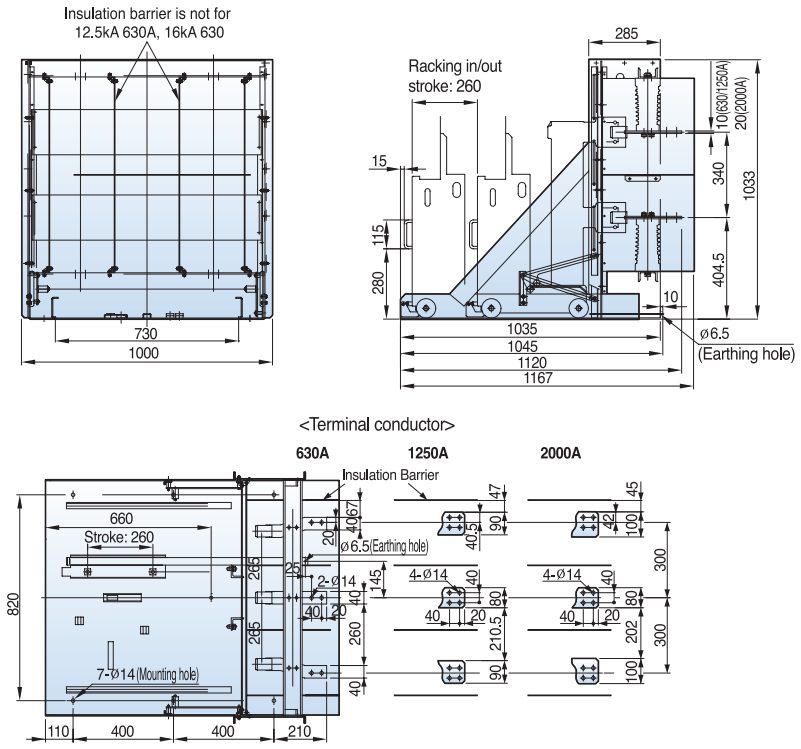

Note) The phase insulation barrier is not applied to product with 24/25.8kV, 12.5/16kA and 630A rating.

24/25.8kV 12.5/16/25kA 630/1250A

Withdrawable

■ G type cradle Tulip contact, phase distance 265mm

Type
VCL-20G13F06
VCL-20G13F13
VCL-20G16F06
VCL-20G16F13
VCL-20G25F06
VCL-20G25F13
VCL-25G13F06
VCL-25G13F13
VCL-25G16F06
VCL-25G16F13
VCL-25G25F06
VCL-25G25F13

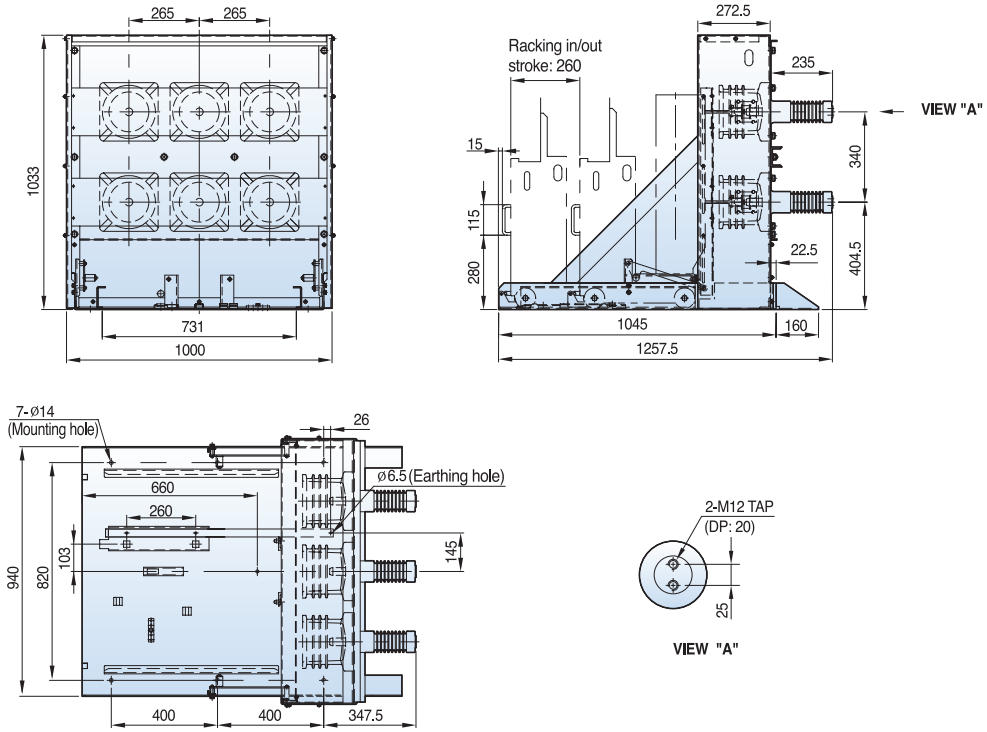

Dimensions - VL type (VL-20/25)

24/25.8kV 12.5/16/25kA 630A

Withdrawable

Type
VCL-20G13B06
VCL-20G16B06
VCL-20G25B06
VCL-25G13B06
VCL-25G16B06
VCL-25G25B06

■ G type cradle, Tulip contact, phase distance 210mm

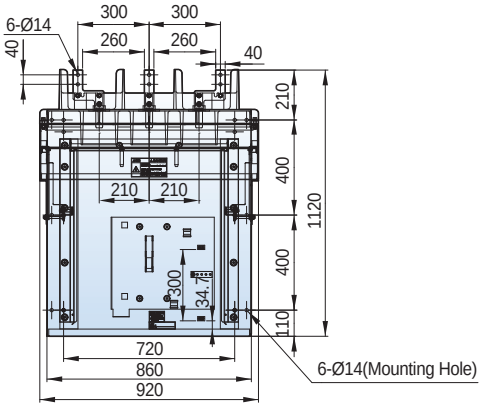

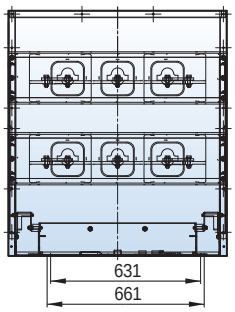

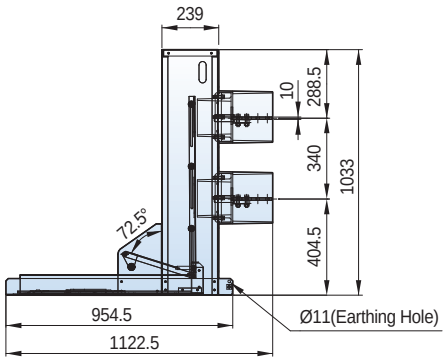

24/25.8kV 12.5/16/25kA 1250A

Withdrawable

Type
VCL-20G13B13
VCL-20G16B13
VCL-20G25B13
VCL-25G13B13
VCL-25G16B13
VCL-25G25B13

■ G type cradle, Tulip contact, phase distance 210mm

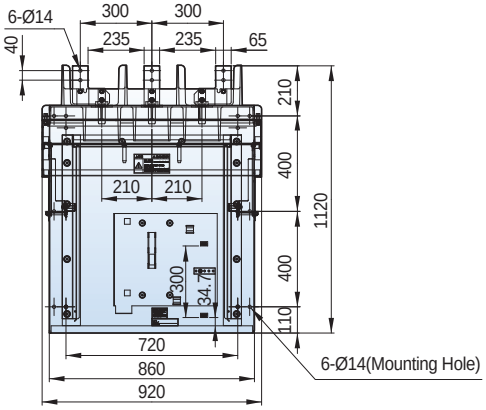

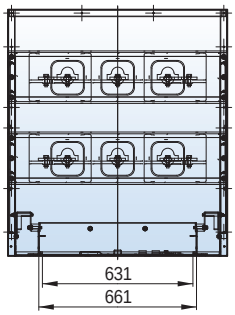

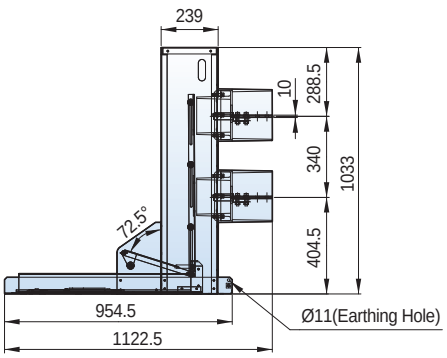

24/25.8kV 12.5/16/25kA 2000A

Withdrawable

■ G type cradle, Tulip contact, phase distance 210mm

Type
VCL-20G13B20
VCL-20G16B20
VCL-20G25B20
VCL-25G13B20
VCL-25G16B20
VCL-25G25B20

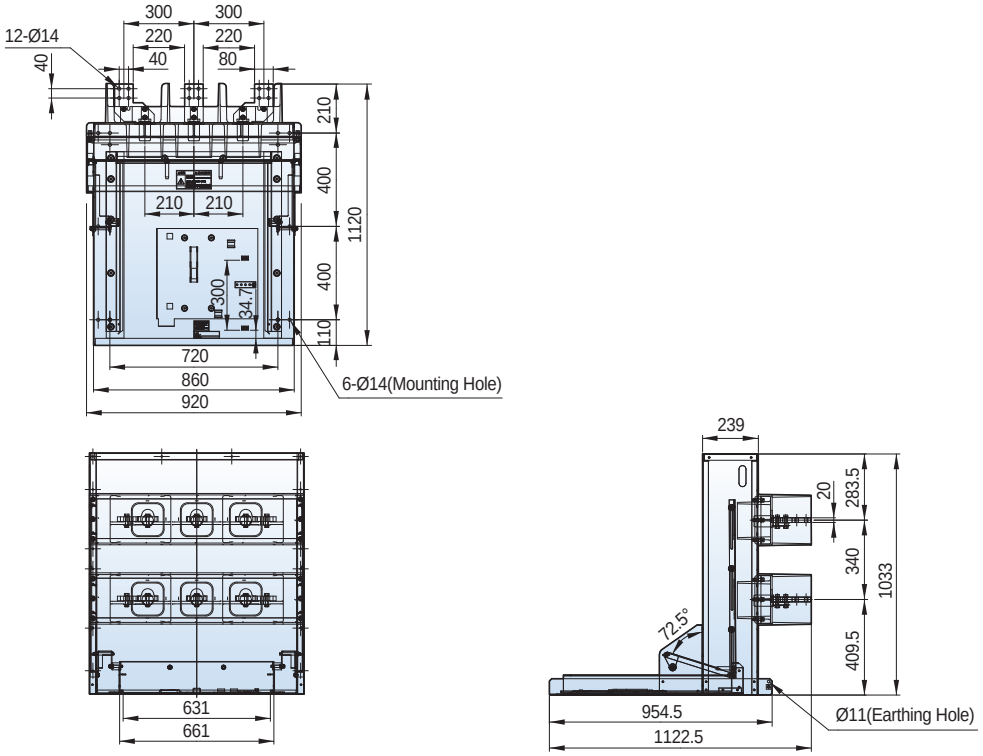

24/25.8kV 12.5/16/25kA 630/1250/2000A

Withdrawable

■ K type cradle Enclosed, Tulip contact, phase distance 210/265mm

Type
VCL-20K13B06
VCL-20K13B13
VCL-20K16B06
VCL-20K16B13
VCL-20K25B06
VCL-20K25B13
VCL-25K13B06
VCL-25K13B13
VCL-25K16B06
VCL-25K16B13
VCL-25K25B06
VCL-25K25B13
VCL-20K13F06
VCL-20K13F13
VCL-20K16F06
VCL-20K16F13
VCL-20K25F06
VCL-20K25F13
VCL-25K13F06
VCL-25K13F13
VCL-25K16F06
VCL-25K16F13
VCL-25K25F06
VCL-25K25F13
VCL-25K25F20

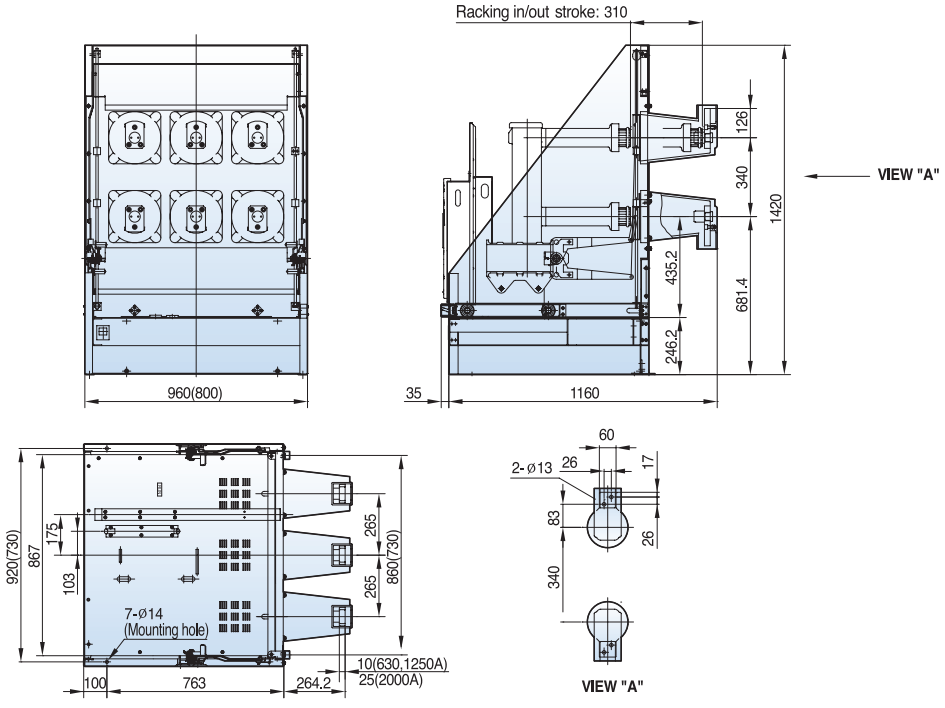

Note) In case of phase distance 210mm ( ) means dimensions and 630A, 1250A areavailable only
Items : VCL-20K13B06, VCL-20K13B13, (G-type closed Tulip way, 630A, 1250A)

Dimensions - VL type (VL-20/25)

24/25.8kV 12.5/16/25kA 630/1250A

Withdrawable

Type
VCL-20H13B06
VCL-20H13B13
VCL-20H16B06
VCL-20H16B13
VCL-20H25B06
VCL-20H25B13
VCL-25H13B06
VCL-25H13B13
VCL-25H16B06
VCL-25H16B13
VCL-25H25B06
VCL-25H25B13

■ H type cradle, phase distance 210mm

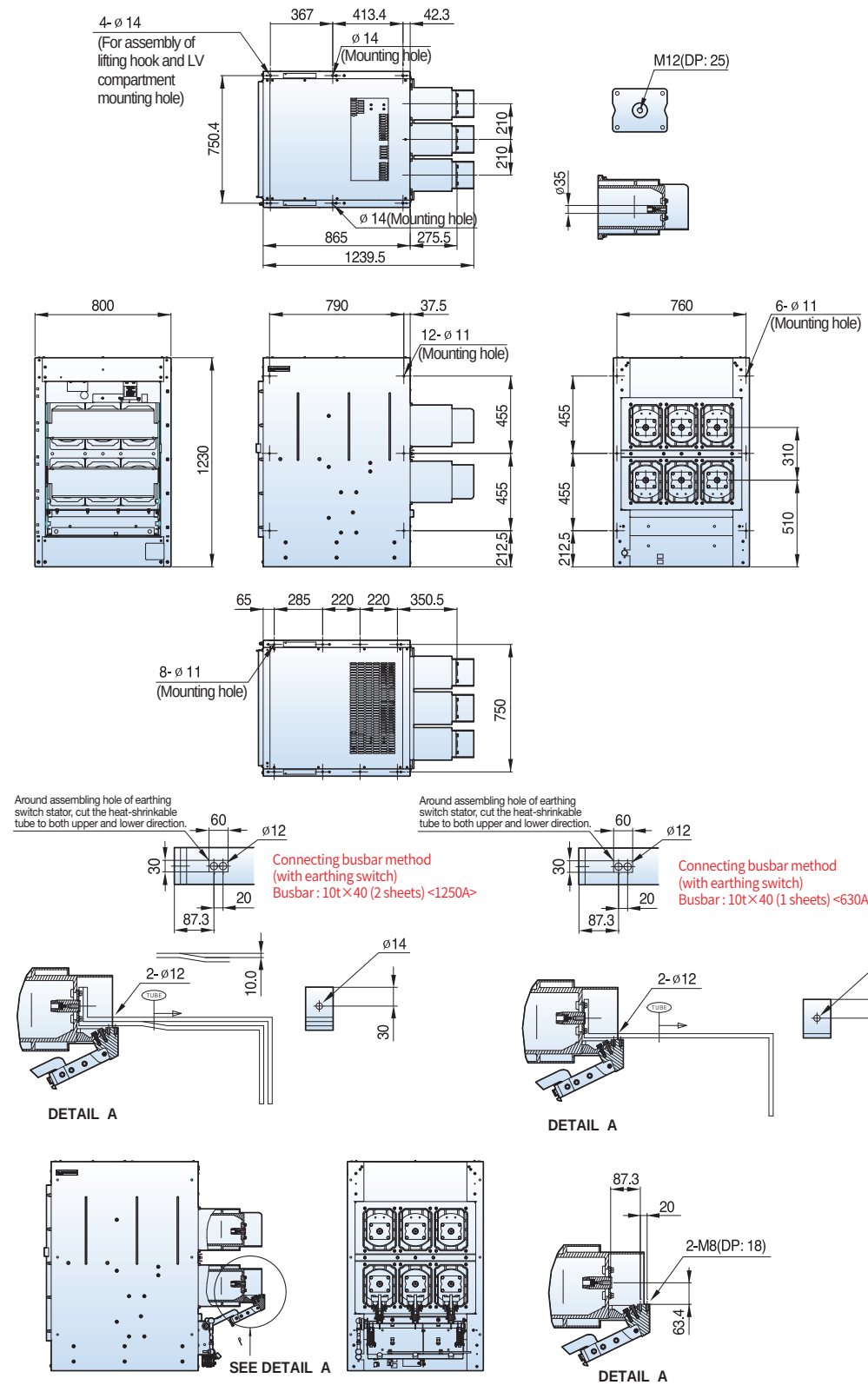

24/25.8kV 12.5/16/25kA 630/1250A

Withdrawable

Type
VCL-20H13D06
VCL-20H13D13
VCL-20H16D06
VCL-20H16D13
VCL-20H25D06
VCL-20H25D13
VCL-25H13D06
VCL-25H13D13
VCL-25H16D06
VCL-25H16D13
VCL-25H25D06
VCL-25H25D13

■ H type cradle, phase distance 275mm

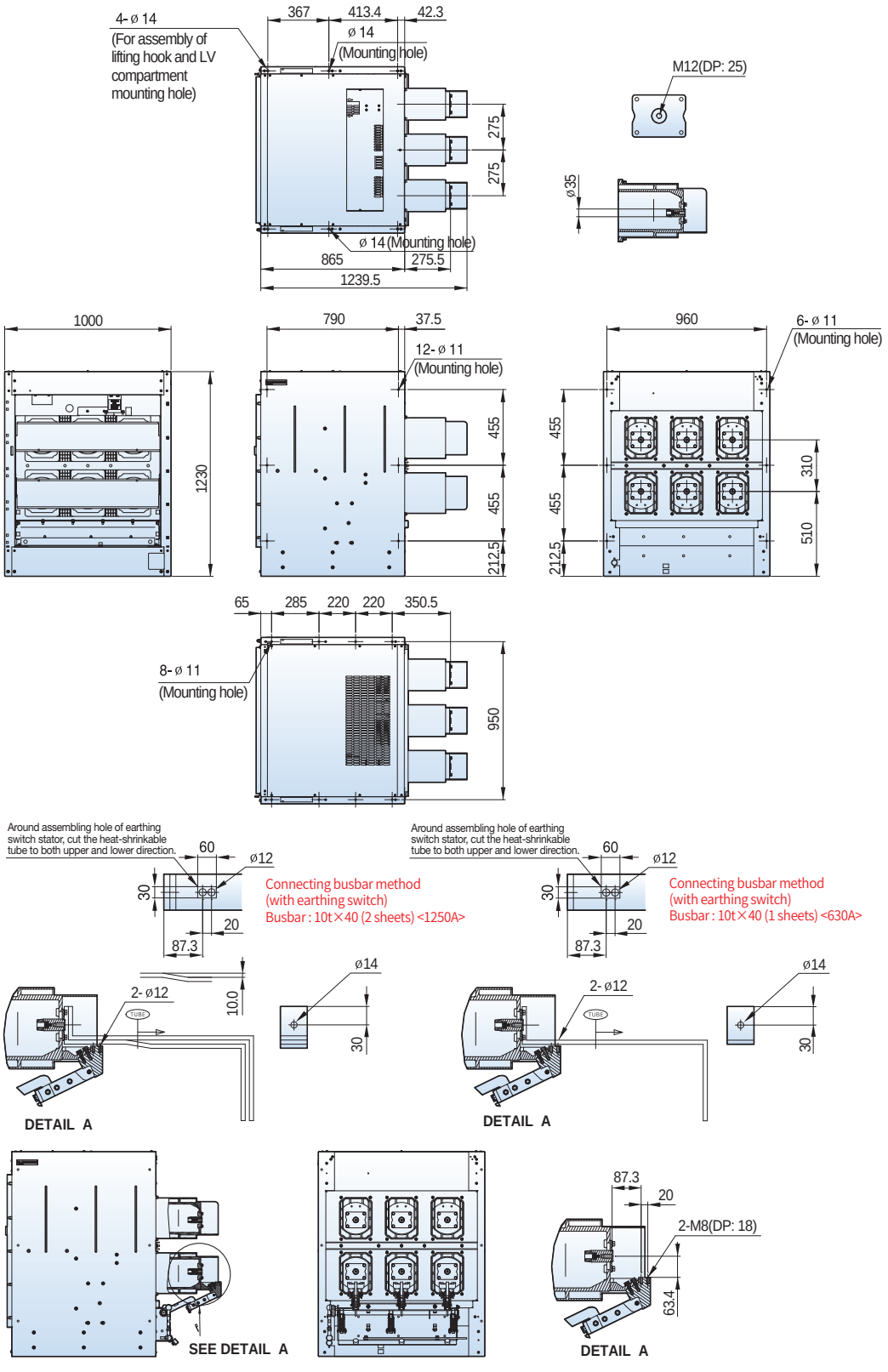

Dimensions - VL type (VL-20/25)

24/25.8kV 25kA 2000A

Withdrawable

Type
VCL-20H25B20
VCL-25H25B20

■ H type cradle, phase distance 210mm

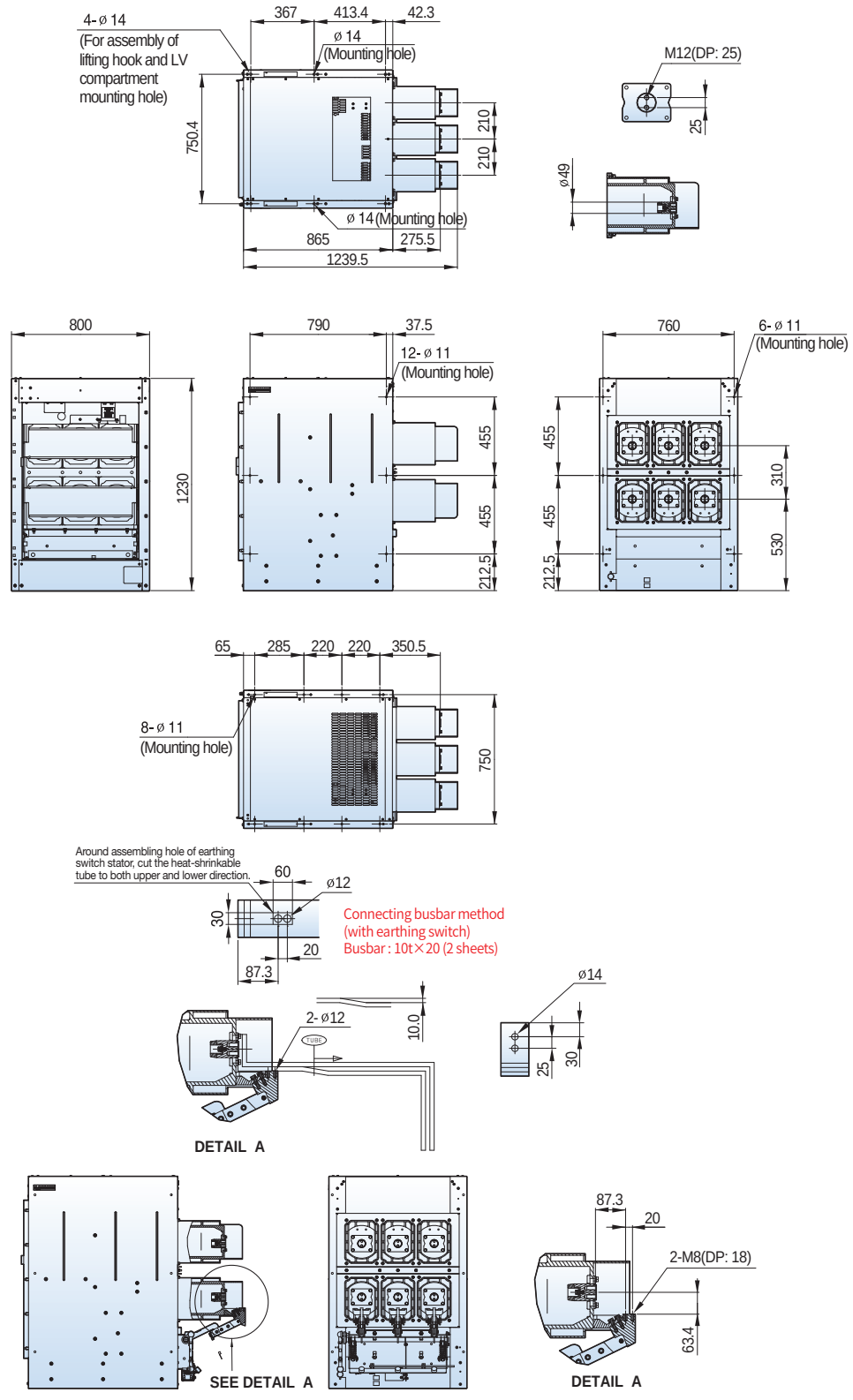

24/25.8kV 25kA 2000A

Withdrawable

Type
VCL-20H25D20
VCL-25H25D20

■ H type cradle, phase distance 275mm

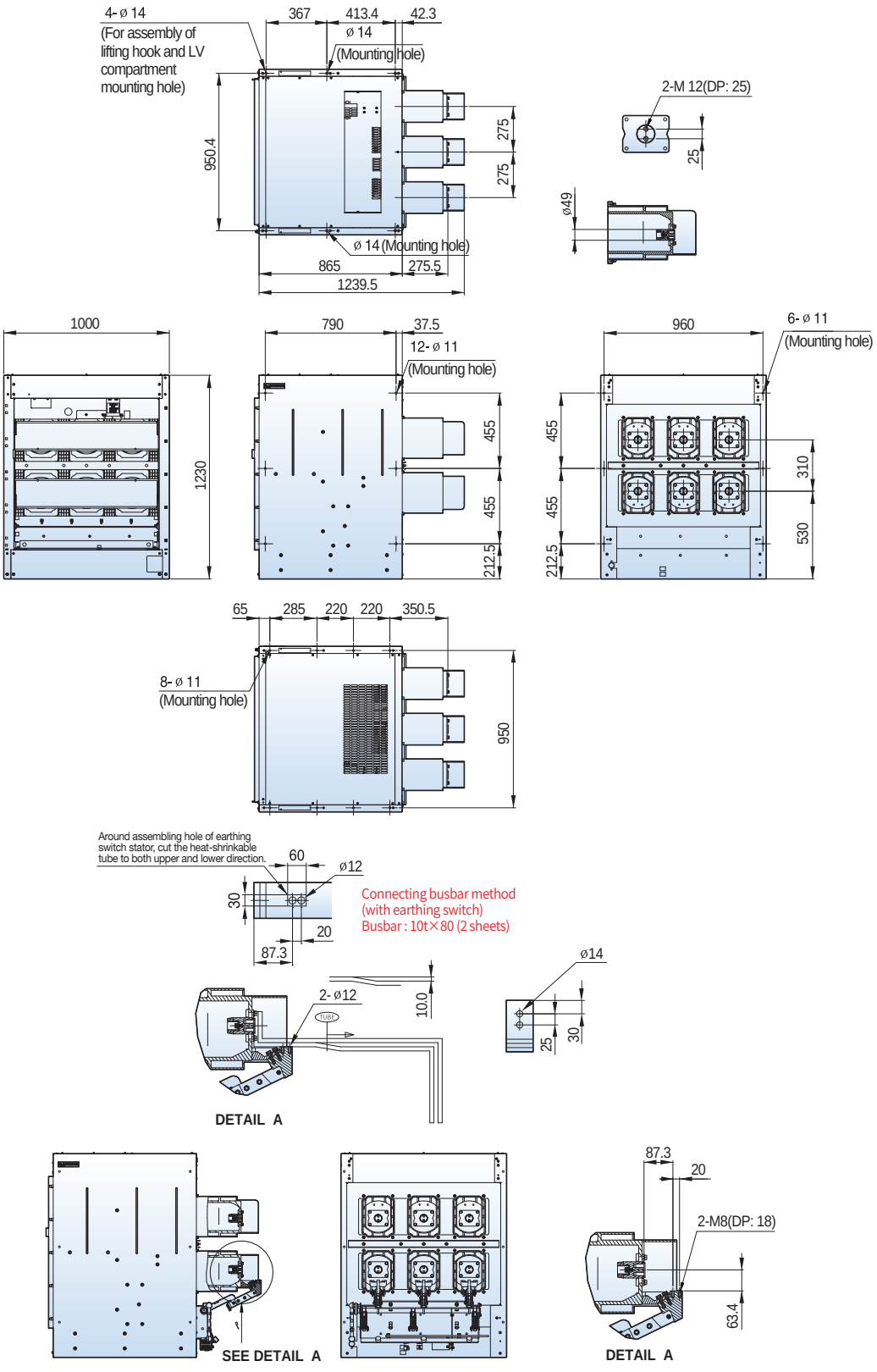

Dimensions - VL type (VL-36)

24/25.8kV 25kA 2500A

Withdrawable

Type
VCL-20H25D25
VCL-25H25D25

■ H type cradle, phase distance 275mm

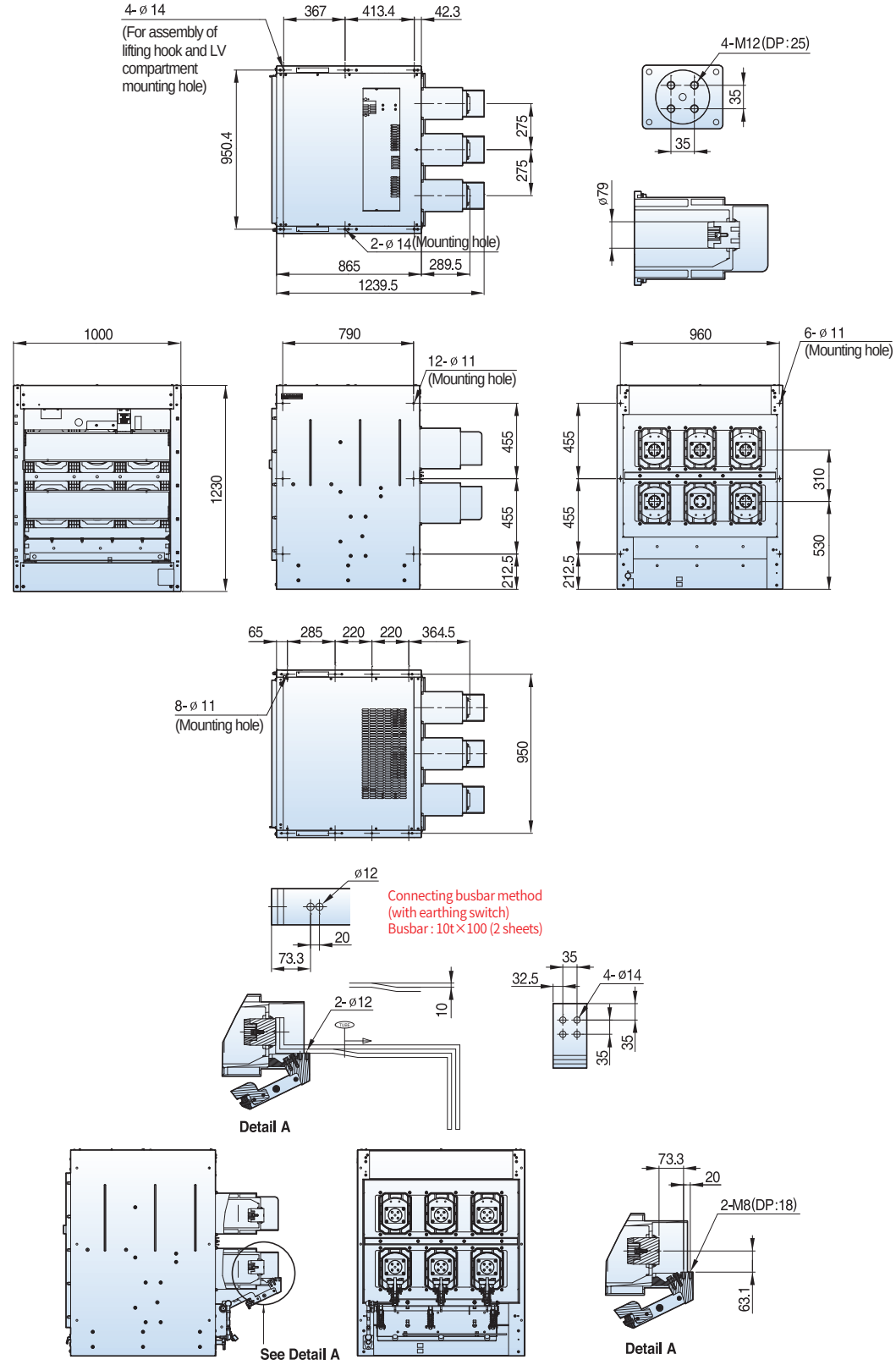

36kV 25kA 630/1250A

Fixed

Type
VL-36P25D06
VL-36P25D13

■ P type, phase distance 275mm

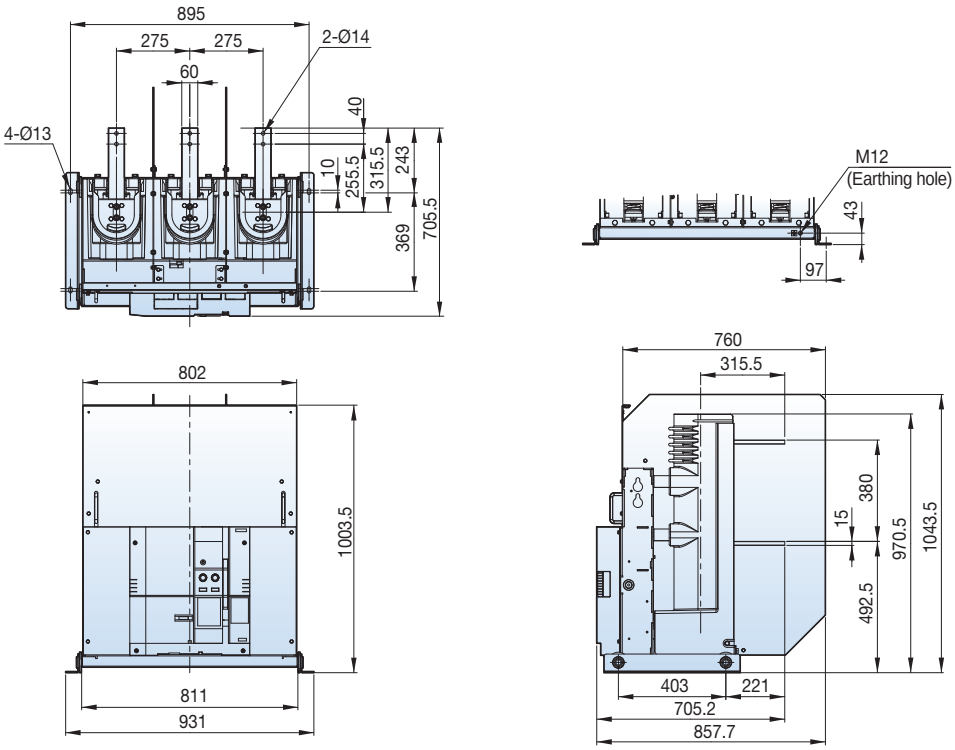

Withdrawable

Type
VL-36H25D06
VL-36H25D13

■ H type unit, phase distance 275mm

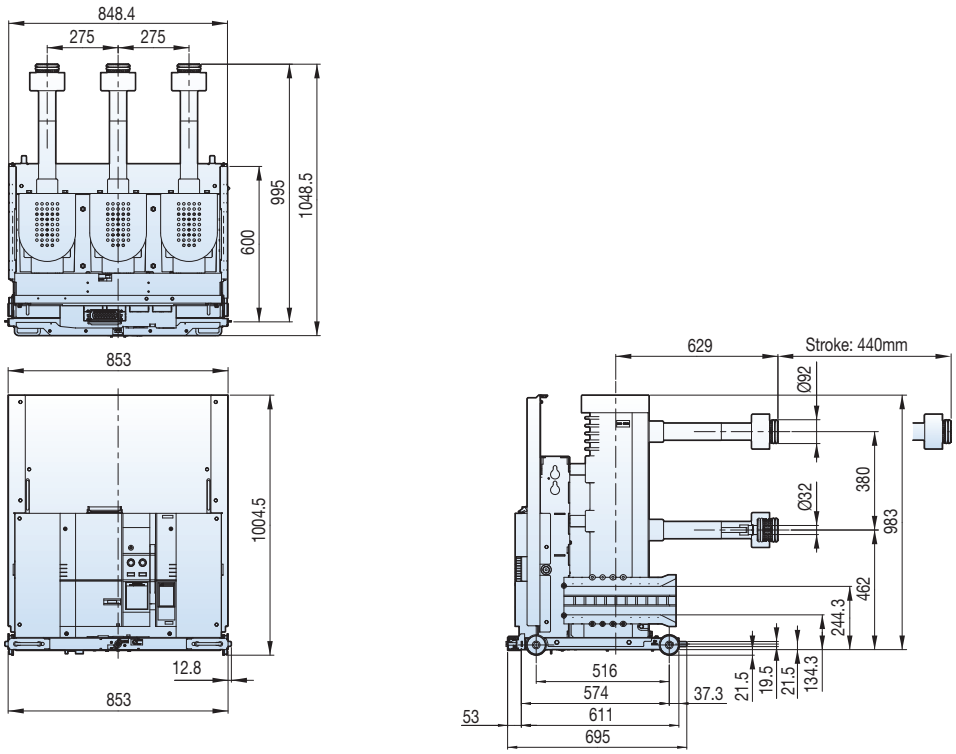

Dimensions - VL type (VL-36)

36kV 25kA 630/1250A

Withdrawable

■ H type cradle, phase distance 275mm

Type
VCL-36H25D06
VCL-36H25D13

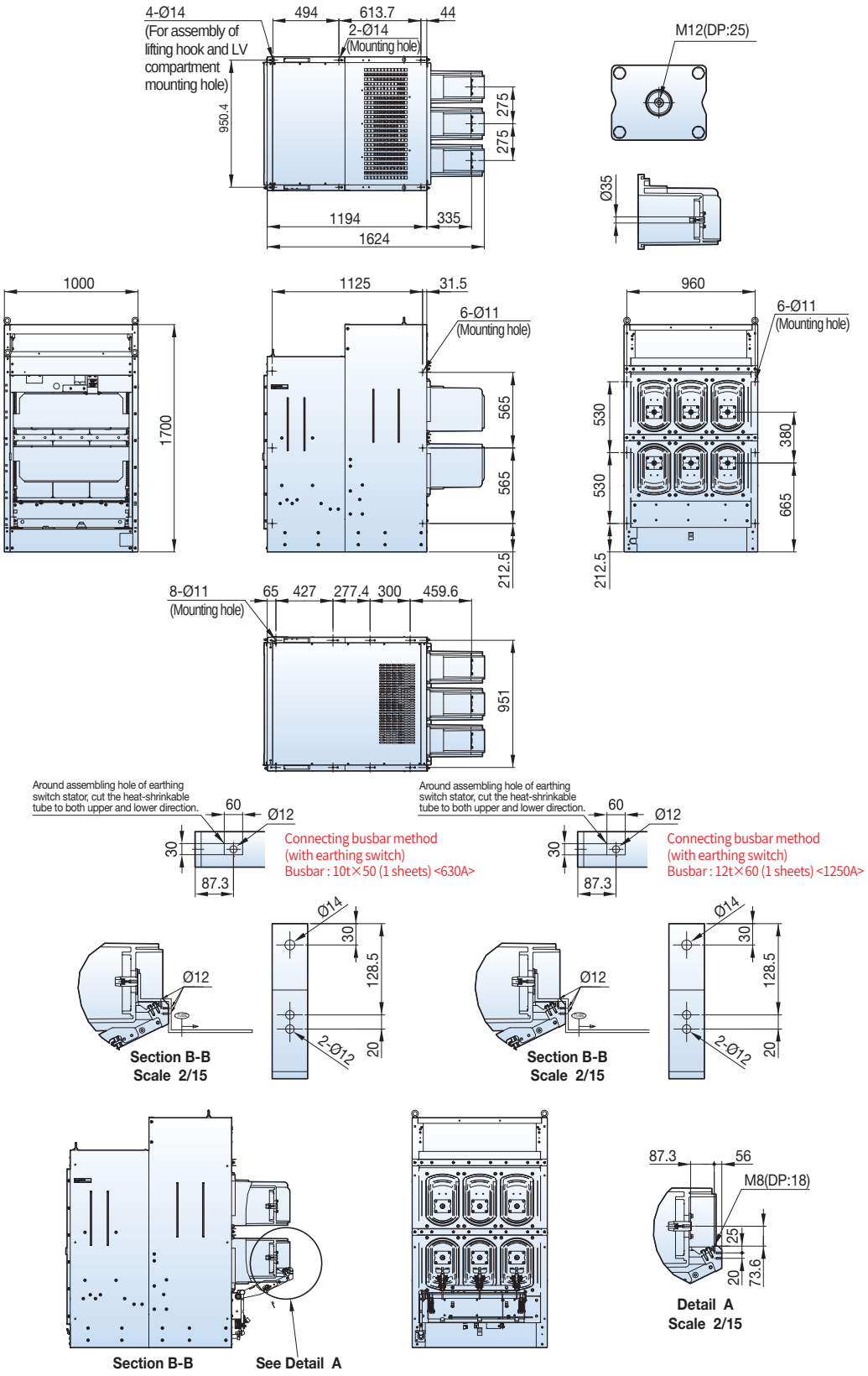

36kV 25kA 2000A

Fixed

Type
VL-36P25D20

■ P type, phase distance 275mm

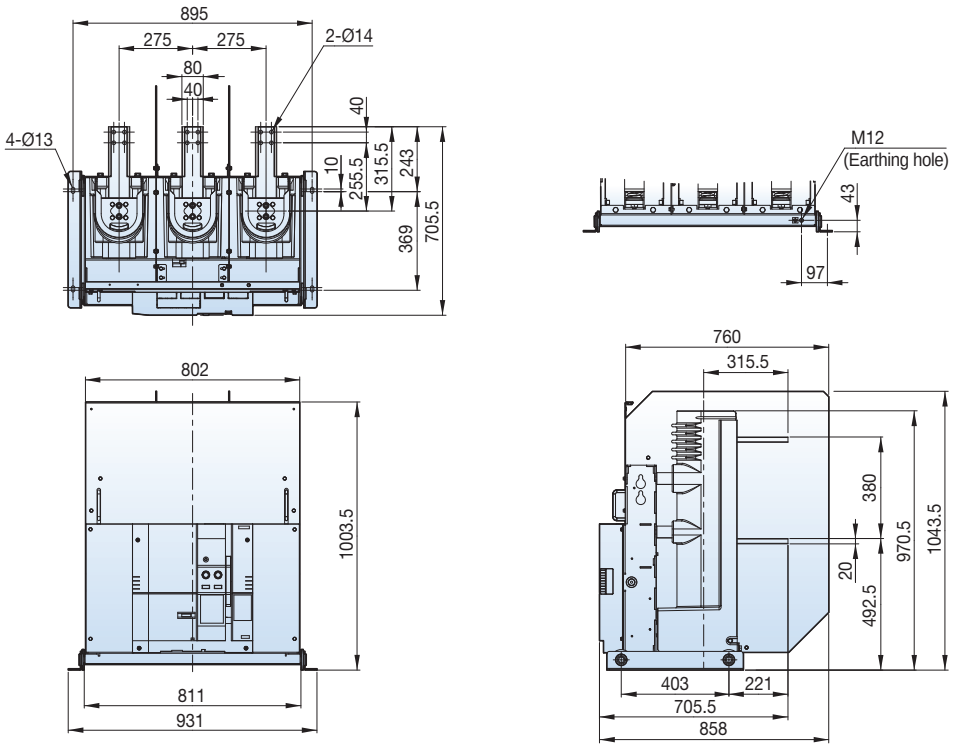

Withdrawable

Type
VL-36H25D20

■ H type unit, phase distance 275mm

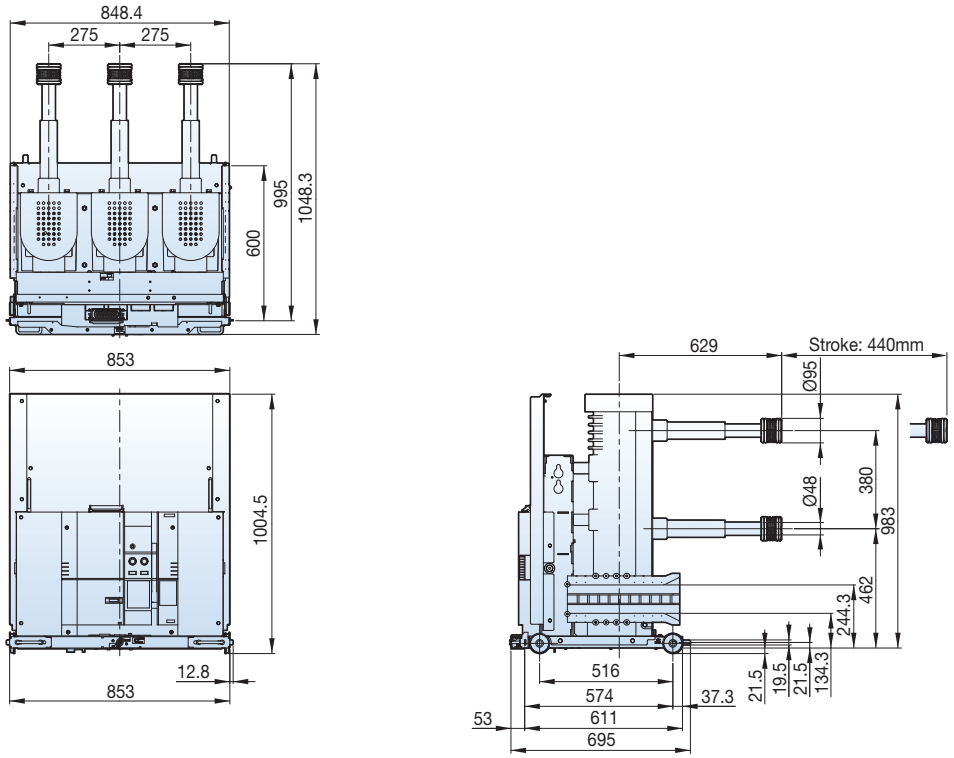

Dimensions - VL type (VL-36)

36kV 25kA 2000A

Withdrawable

■ H type cradle, phase distance 275mm

Type
VCL-36H25D20

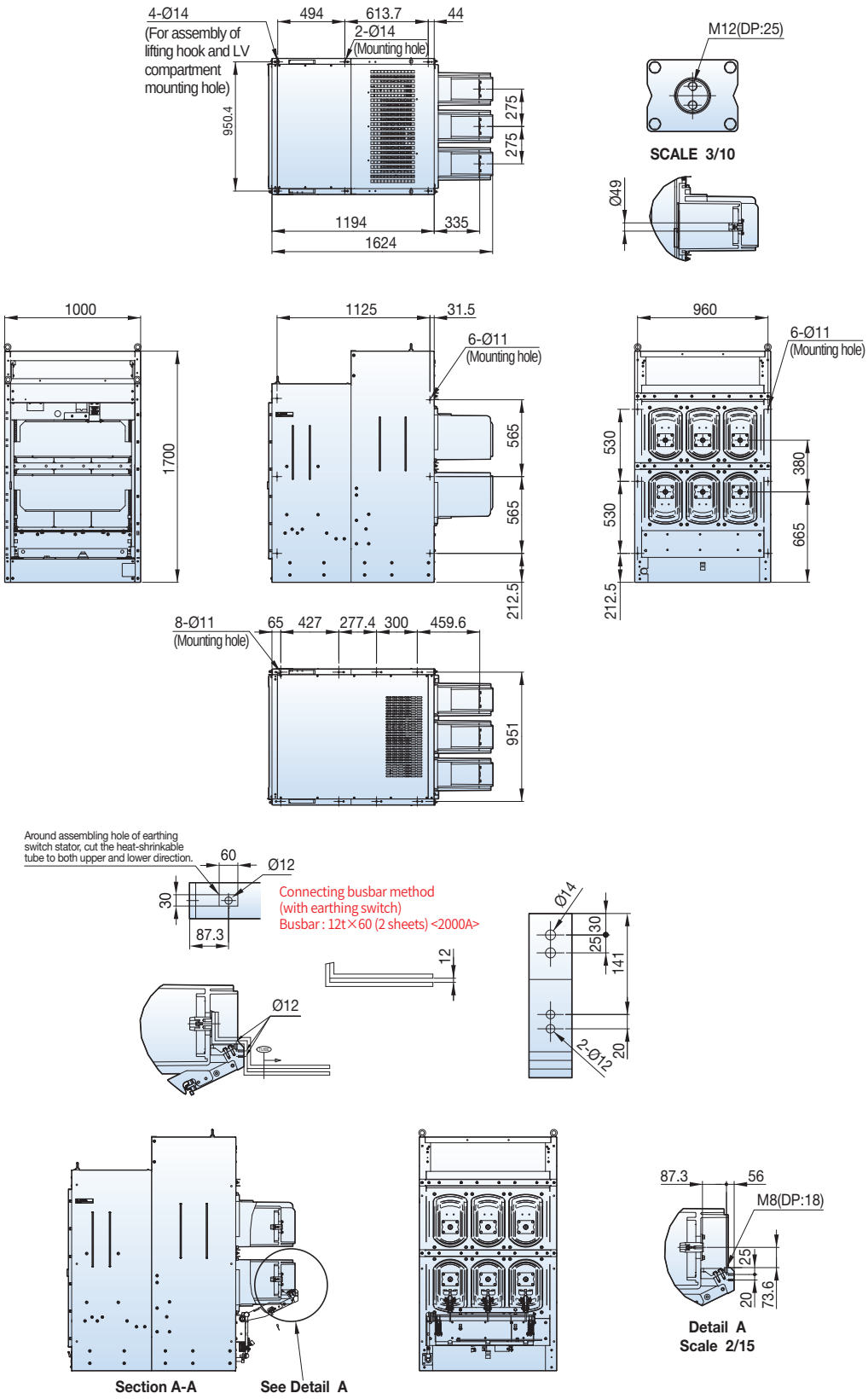

36kV 25kA 2500A

Fixed

Type
VL-36P25D25

■ P type, phase distance 275mm

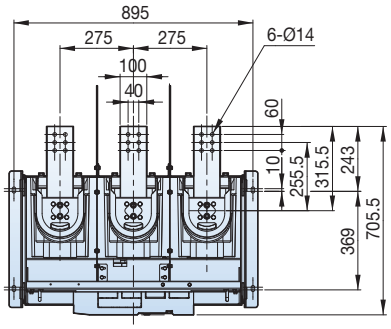

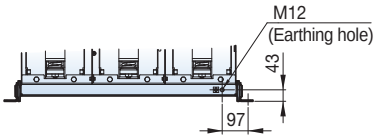

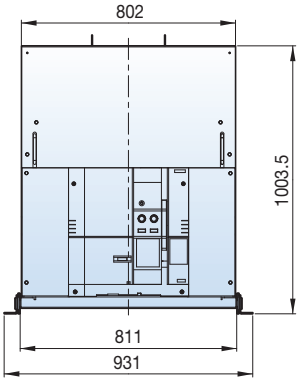

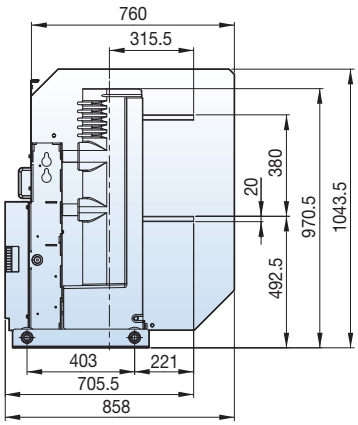

Withdrawable

Type
VL-36H25D25

■ H type unit, phase distance 275mm

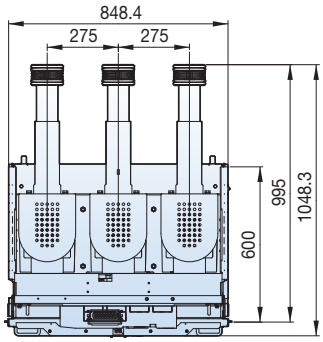

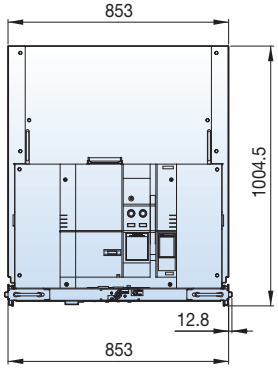

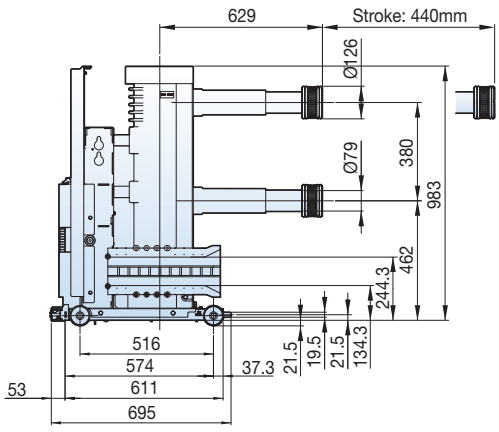

Dimensions - LVB, VH type (LVB, VH-06/12)

36kV 25kA 2500A

Withdrawable

Type
VCL-36H25D25

■ H type cradle, phase distance 275mm

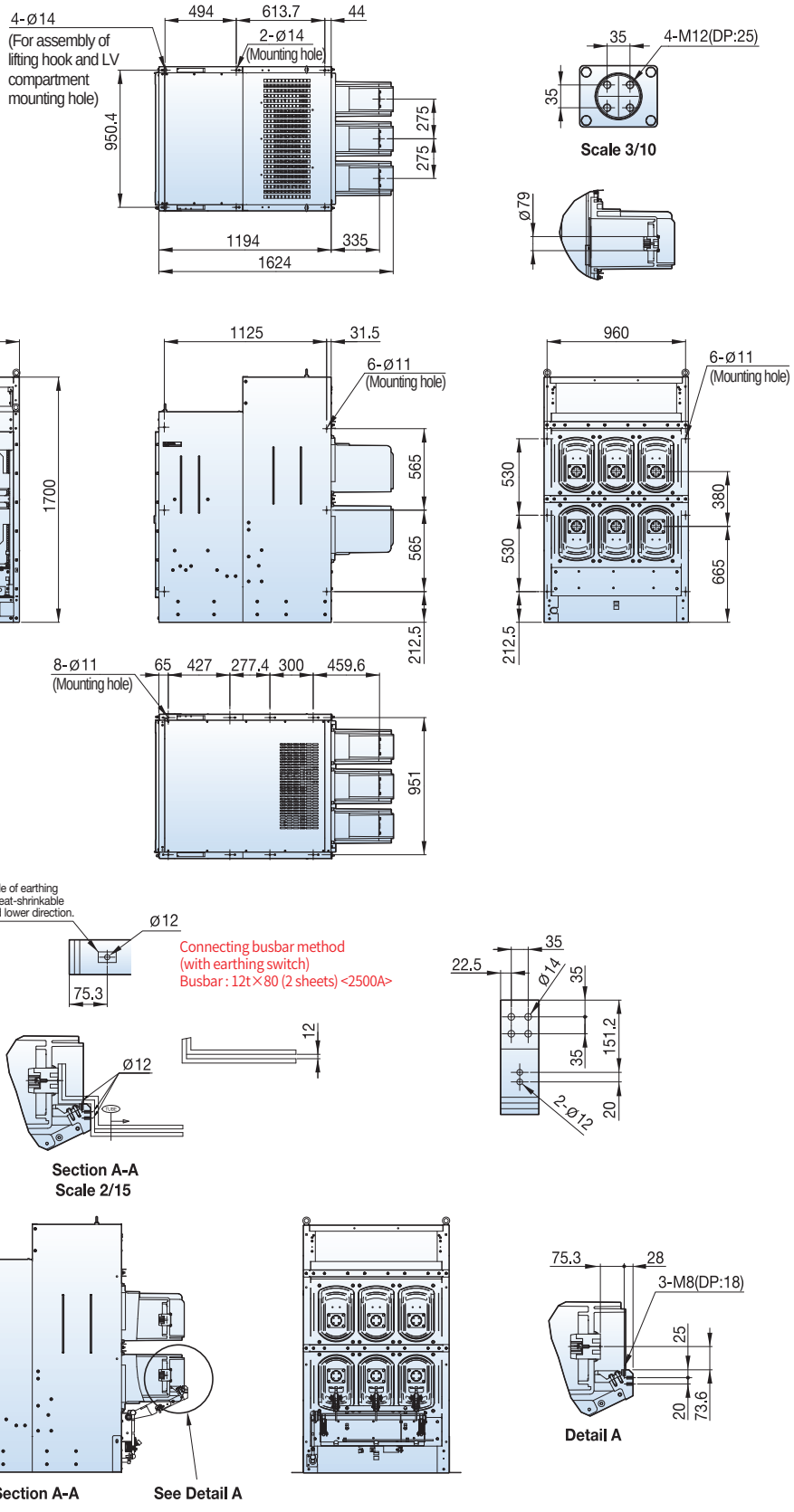

7.2kV, 40kA, 1250/2000A

Fixed

Type
LVB-06P-32L/12
LVB-06P-32L/20
LVB-06P-40L/13
LVB-06P-40L/20

■ P type, phase distance 150mm

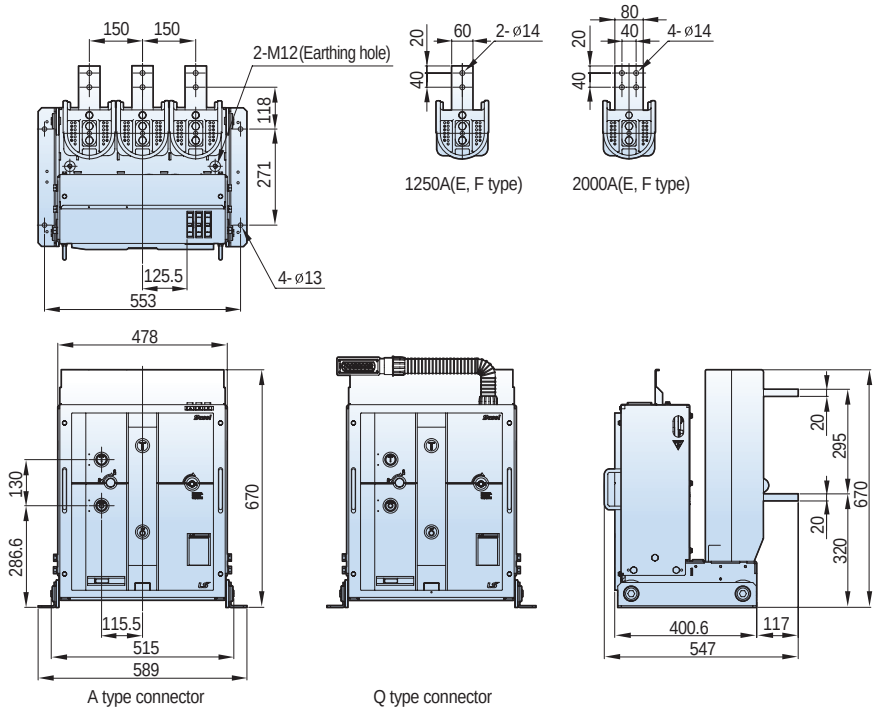

Withdrawable

Type
LVB-06E-32L/12
LVB-06E-32L/20
LVB-06E-40L/13
LVB-06E-40L/20
LVB-06F-32L/12
LVB-06F-32L/20
LVB-06F-40L/13
LVB-06F-40L/20
LVB-06G-32L/12
LVB-06G-32L/20
LVB-06G-40L/13
LVB-06G-40L/20

■ E,F,G type unit, phase distance 150mm

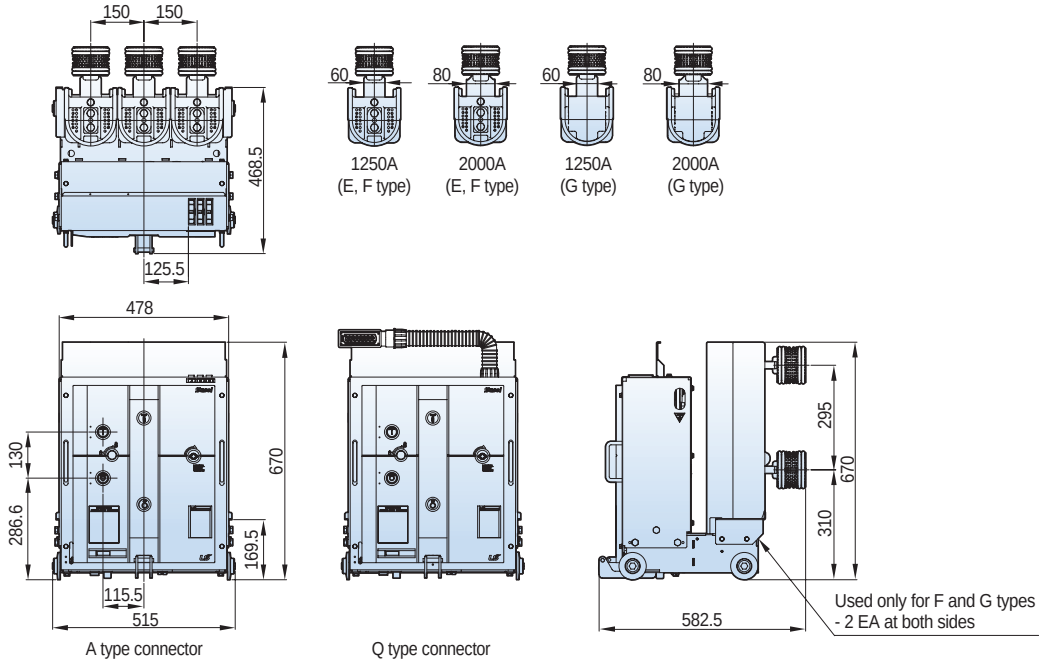

Dimensions - LVB, VH type (LVB, VH-06/12)

7.2/12kV, 40kA, 1250/2000A

Withdrawable

Type
LVB-06G-32L/12-T
LVB-06G-32L/20-T
LVB-06G-40L/12-T
LVB-06G-40L/20-T
LVB-12G-32L/12-T
LVB-12G-32L/20-T
LVB-12G-40L/12-T
LVB-12G-40L/20-T

■ MCSG type unit, phase distance 150mm: option type T

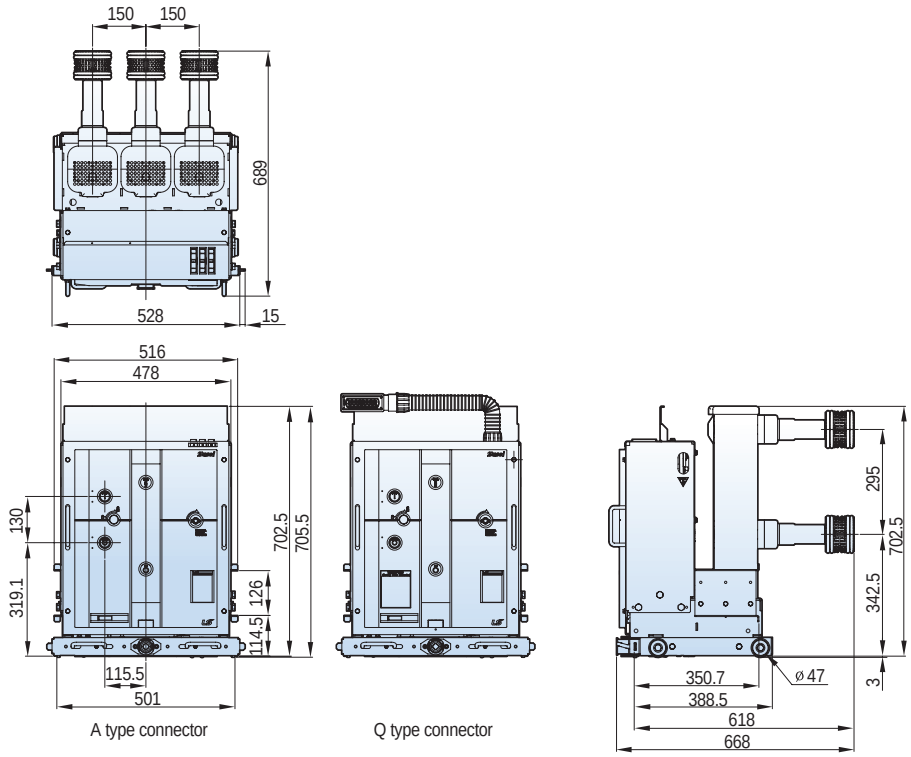

A type connector

Q type connector

7.2/12kV, 31.5/40kA, 1250/2000A

Withdrawable

Type
LVB-06G-32L/12-T2
LVB-06G-32L/20-T2
LVB-06G-40L/12-T2
LVB-06G-40L/20-T2
LVB-12G-32L/12-T2
LVB-12G-32L/20-T2
LVB-12G-40L/12-T2
LVB-12G-40L/20-T2

■ MCSG type unit, phase distance 150mm: option type T2(standard)

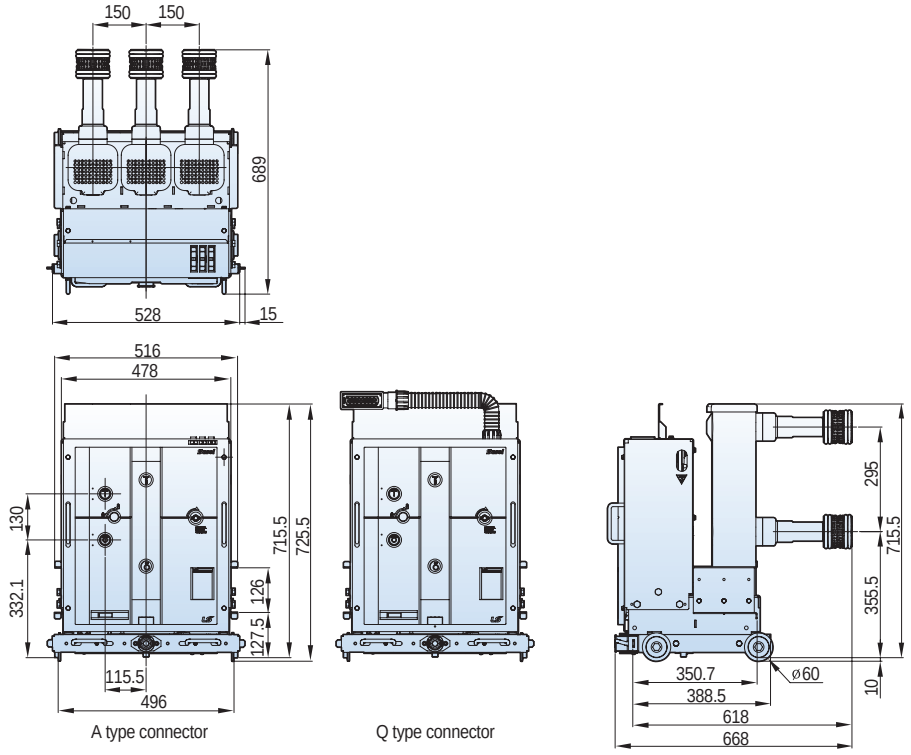

A type connector

Q type connector

7.2kV, 40kA 1250/2000A

Withdrawable

■ E type cradle, phase distance 150mm

Type
LCL-06E-32D/12
LCL-06E-32D/20
LCL-06E-40D/12
LCL-06E-40D/20

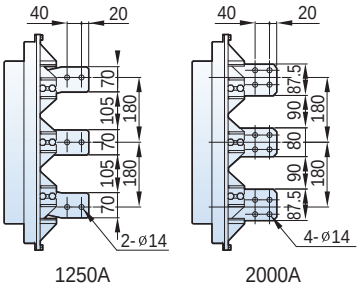

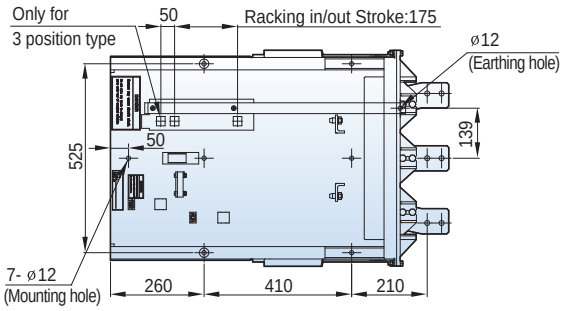

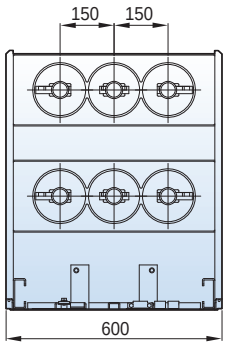

Rating	1250A	2000A
A	10	20

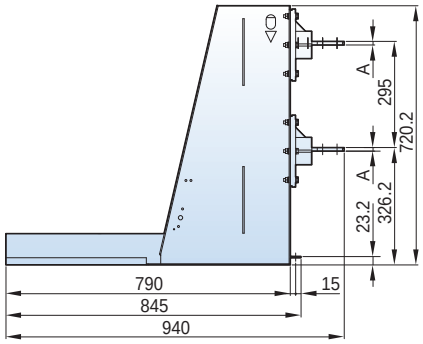

Withdrawable

■ F, G type cradle, phase distance 150mm

Type
LCL-06F-32D/12
LCL-06F-32D/20
LCL-06F-40D/12
LCL-06F-40D/20
LCL-06G-32D/12
LCL-06G-32D/20
LCL-06G-40D/12
LCL-06G-40D/20

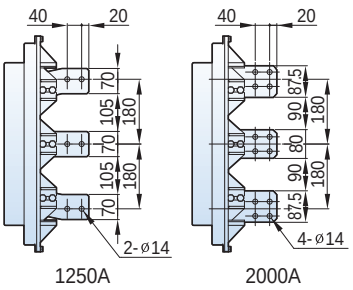

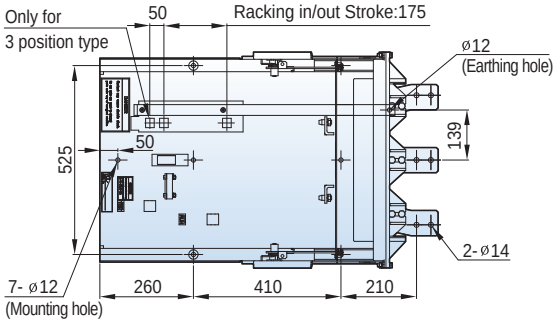

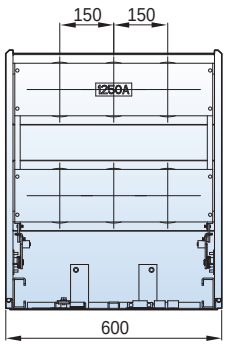

Rating	1250A	2000A
A	10	20

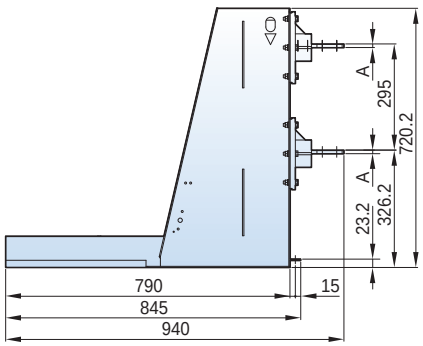

Dimensions - LVB, VH type (LVB, VH-06/12)

7.2/12kV, 40kA 1250/2000A

Withdrawable

Type
LCL-06G-32D/12-T2
LCL-06G-32D/20-T2
LCL-06G-40D/12-T2
LCL-06G-40D/20-T2
LCL-12G-32D/12-T2
LCL-12G-32D/20-T2
LCL-12G-40D/12-T2
LCL-12G-40D/20-T2

■ MCSG type cradle, phase distance 150mm

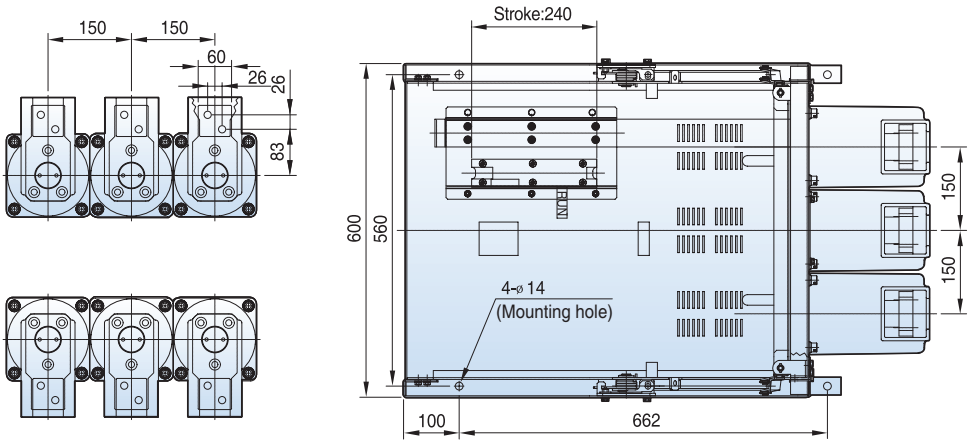

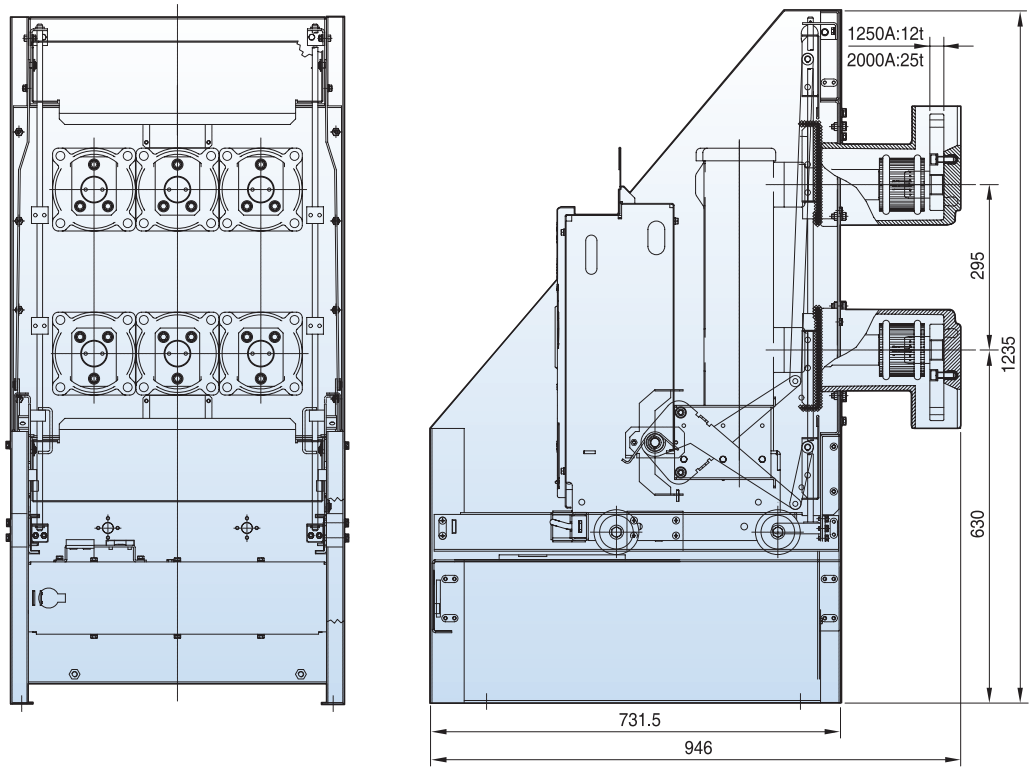

7.2kV, 31.5/40kA, 3150A

Fixed

Type
LVB-06P-32L/30
LVB-06P-40L/30

■ P type, phase distance 210mm

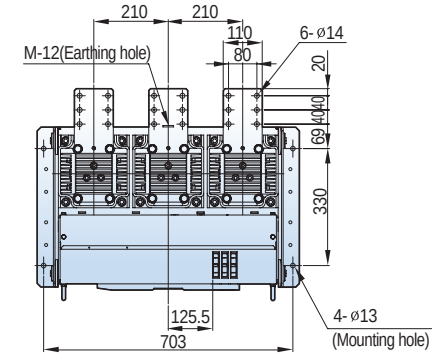

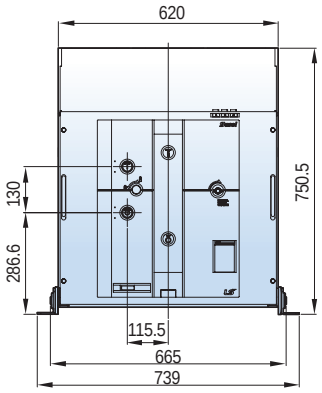

A type connector

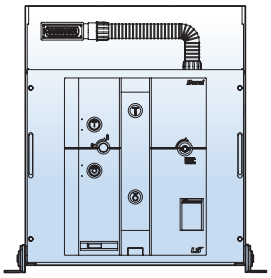

Q type connector

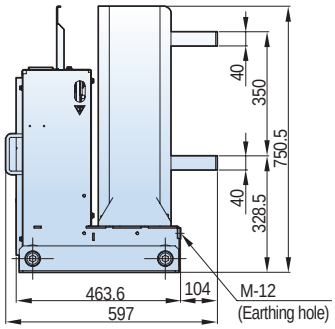

Withdrawable

Type
LVB-06E-32L/30
LVB-06E-40L/30
LVB-06F-32L/30
LVB-06F-40L/30
LVB-06G-32L/30
LVB-06G-40L/30

■ E,F,G type unit, phase distance 210mm

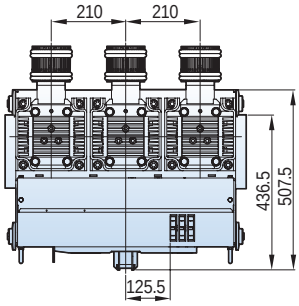

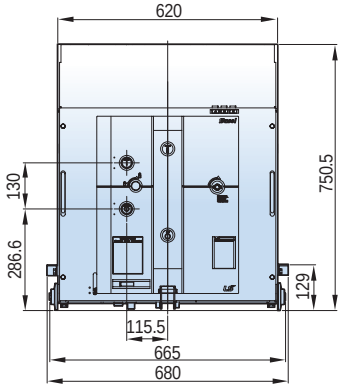

A type connector

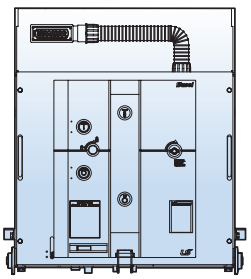

Q type connector

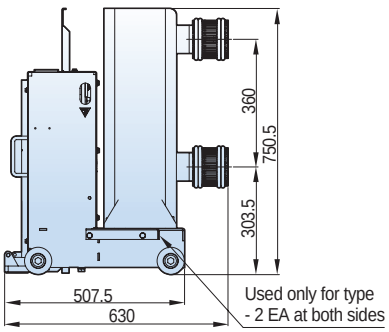

Dimensions - LVB, VH type (LVB, VH-06/12)

7.2kV, 31.5/40kA, 3150A

Withdrawable

Type
LVB-06G-32L/30-T
LVB-06G-40L/30-T
LVB-06G-32L/30-T2
LVB-06G-40L/30-T2

■ MCSG type unit, phase distance 210mm

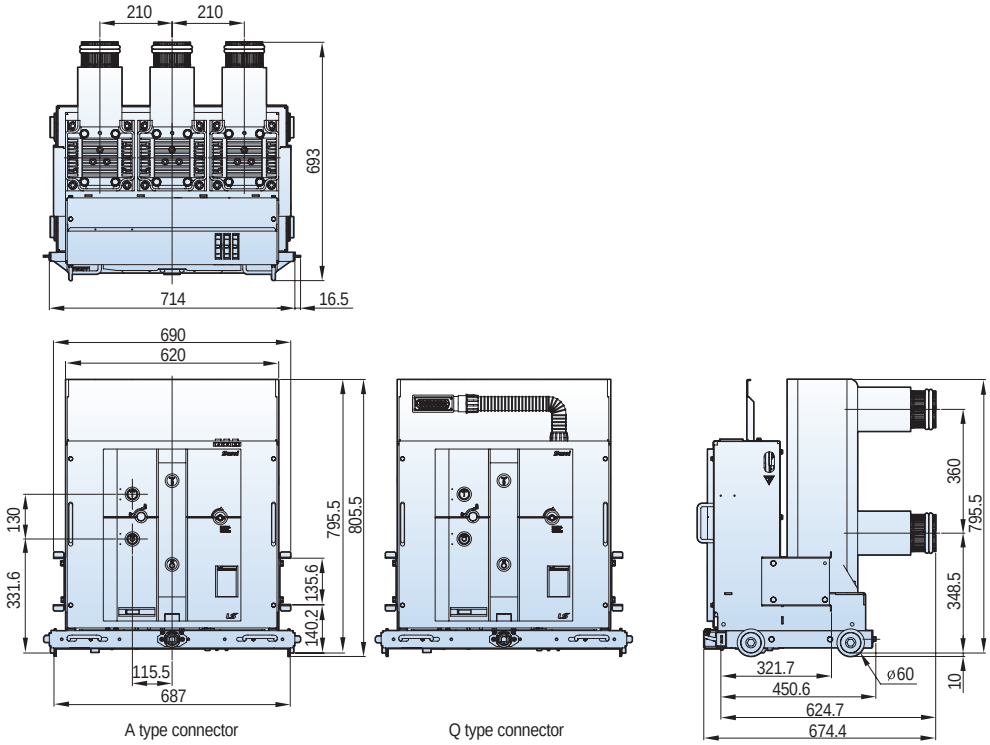

A type connector　　Q type connector

12kV, 31.5/40kA, 3150A

Withdrawable

Type
LVB-12G-32L/30-T
LVB-12G-40L/30-T
LVB-12G-32L/30-T2
LVB-12G-40L/30-T2

■ MCSG type unit, phase distance 210mm

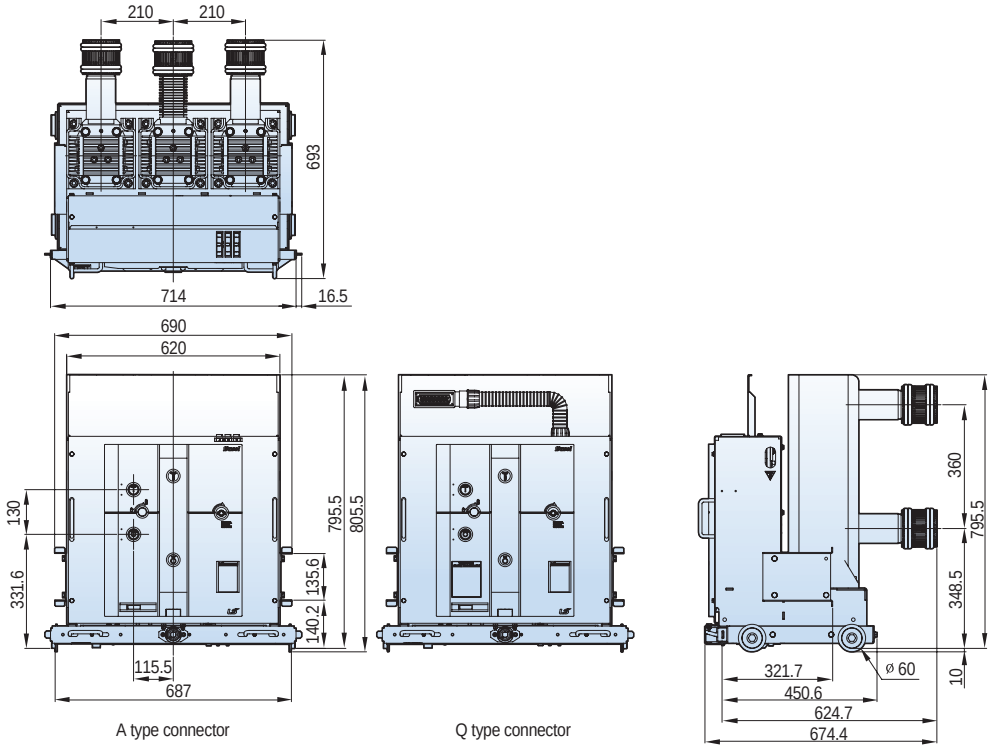

A type connector　　Q type connector

7.2kV, 31.5/40kA 3150A

Withdrawable

Type
LCL-06E-32D/30
LCL-06E-40D/30

■ E type cradle, phase distance 210mm

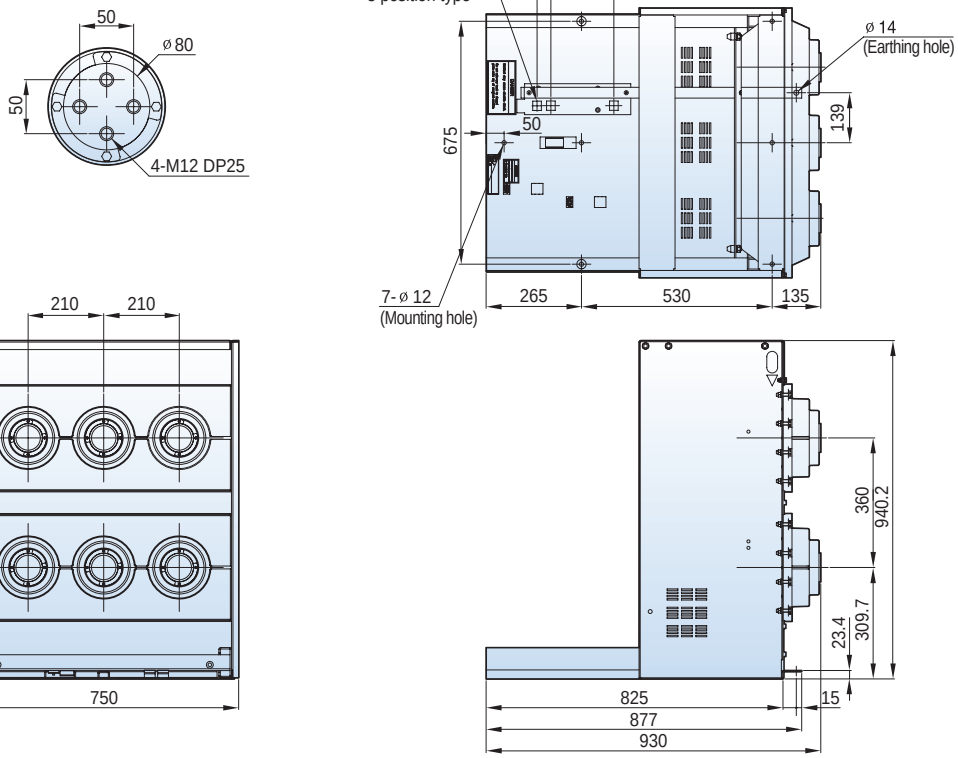

Withdrawable

Type
LCL-06F-32D/30
LCL-06F-40D/30
LCL-06G-32D/30
LCL-06G-40D/30

■ F, G type cradle, phase distance 210mm

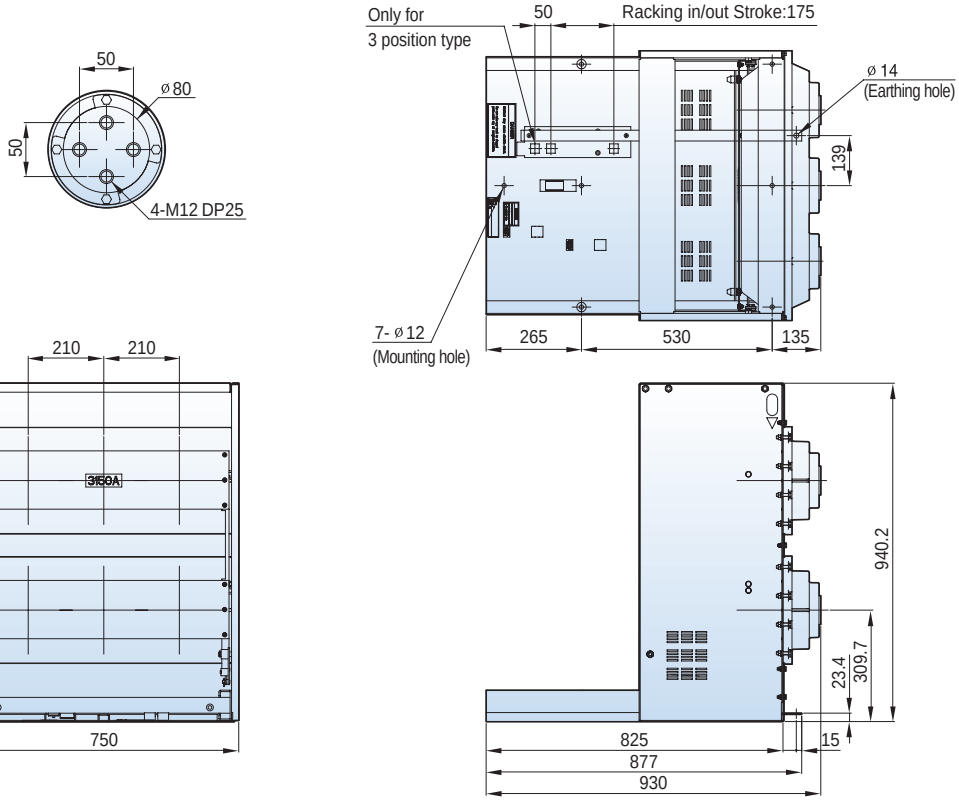

Dimensions - LVB, VH type (LVB, VH-06/12)

7.2/12kV, 31.5/40kA 3150A

Withdrawable

Type
LCL-06G-32D/30-T
LCL-06G-40D/30-T
LCL-12G-32D/30-T
LCL-12G-40D/30-T

■ MCSG type cradle, phase distance 210mm

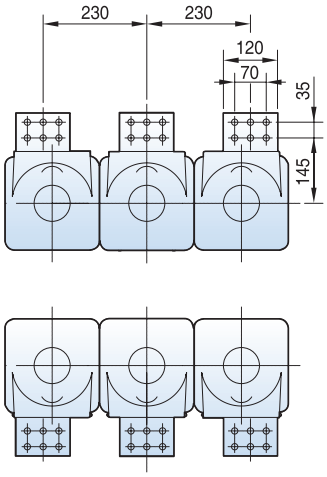

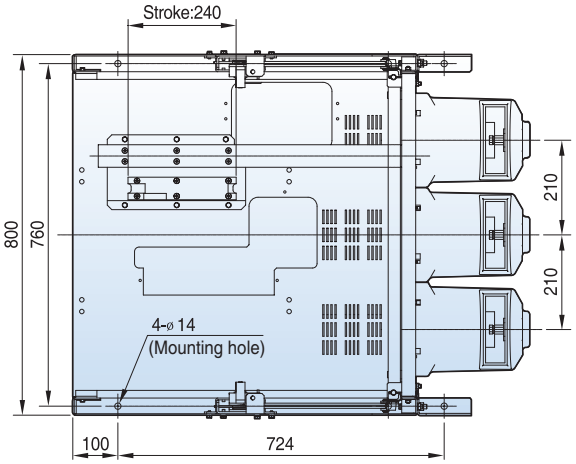

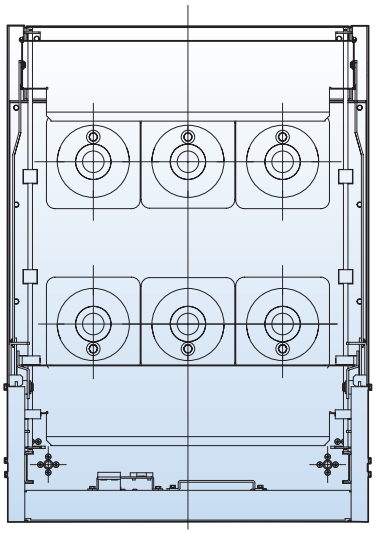

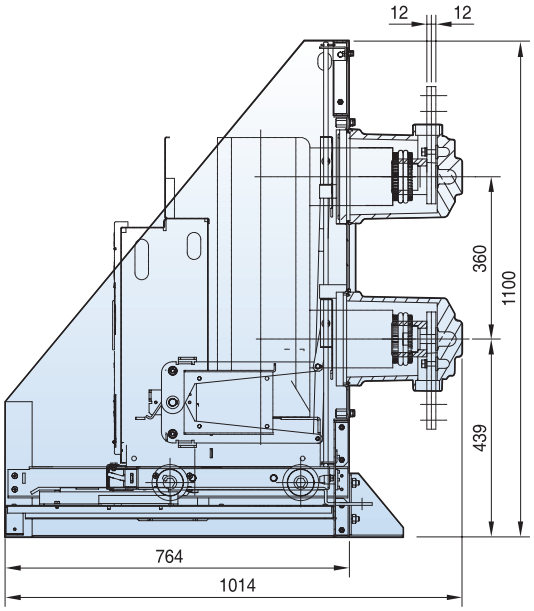

Dimensions - VH type (VH-06/12/17)

7.2kV 40kA 1250/2000A

Withdrawable

Type
VH-06Fs40A13
VH-06Fs40A20

■ Fs type unit, phase distance 150mm

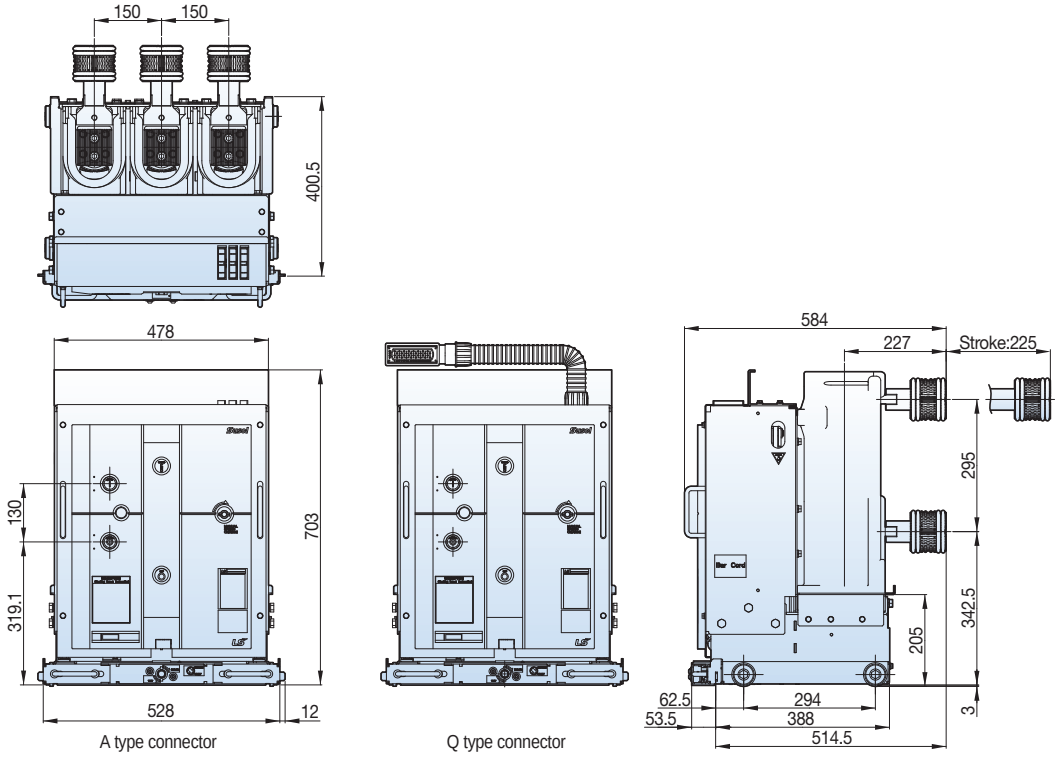

Withdrawable

Type
VCH-06Fs40A13
VCH-06Fs40A20

■ Fs type cradle, phase distance 150mm

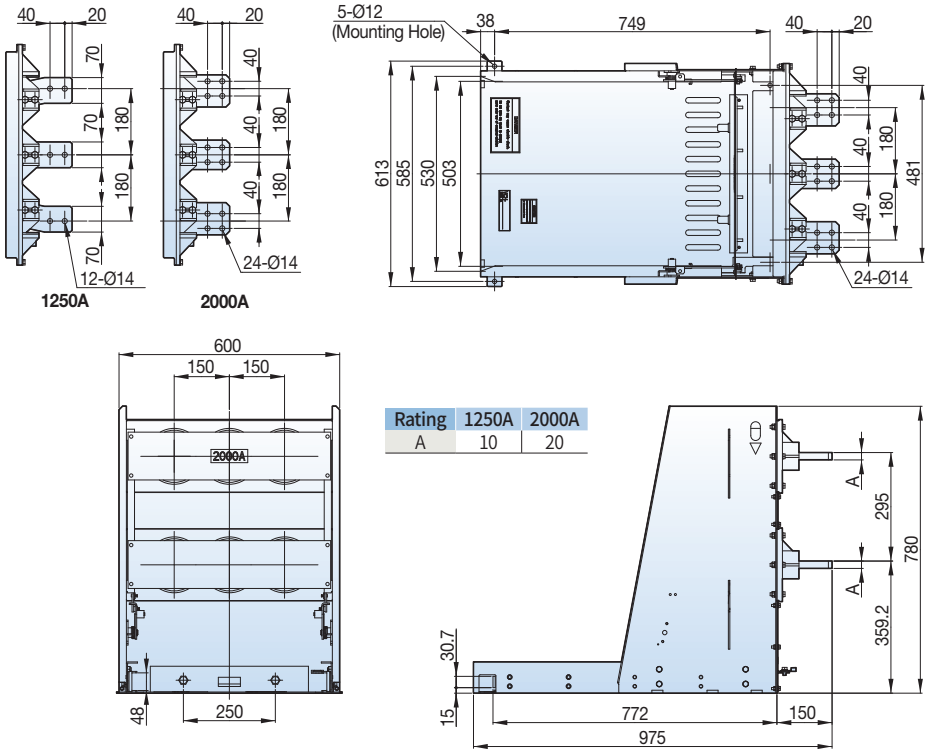

Dimensions - VH type (VH-06/12/17)

7.2kV, 31.5/40kA, 3150A

Withdrawable

Type
VH-06Fs32B32
VH-06Fs40B32

■ Fs type unit, phase distance 210mm

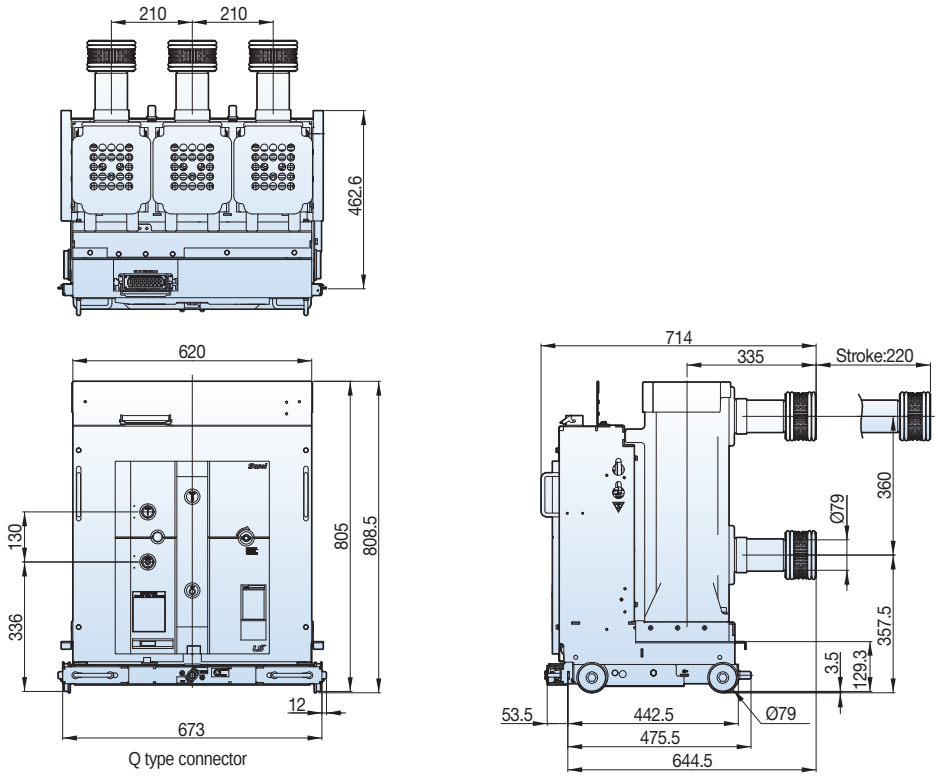

Withdrawable

Type
VCH-06Fs32B32
VCH-06Fs40B32

■ Fs type cradle, phase distance 210mm

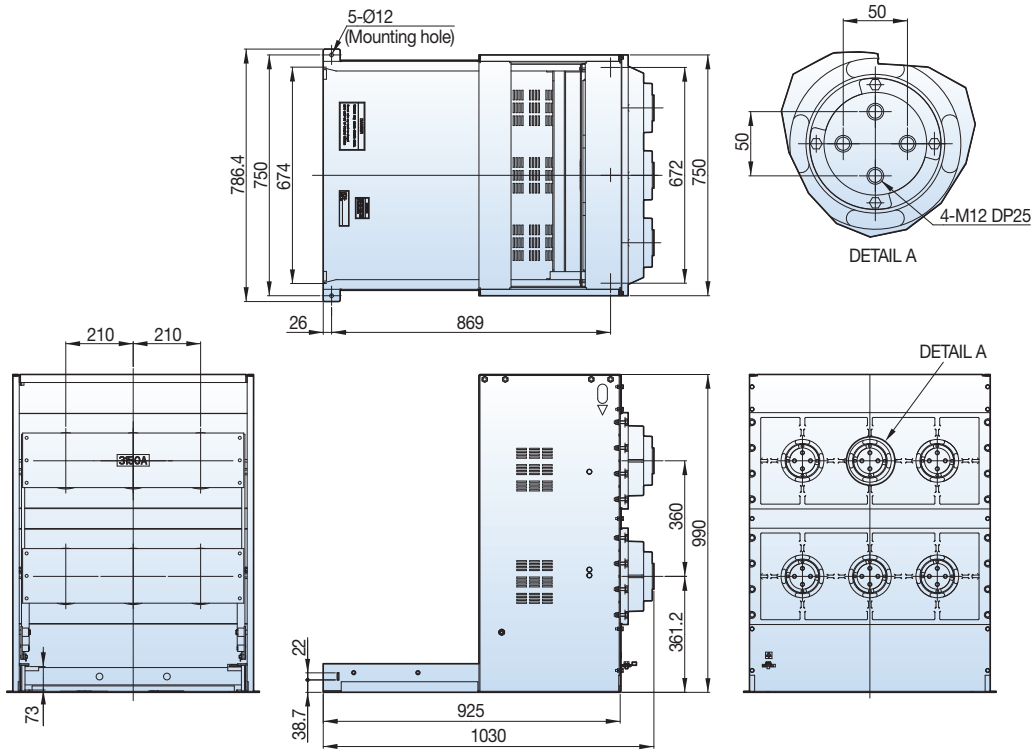

7.2/12kV, 40kA, 1250/2000A

Withdrawable

Type
VH-06Gs40A13
VH-06Gs40A20
VH-12Gs40A13
VH-12Gs40A20

■ Gs type unit, phase distance 150mm

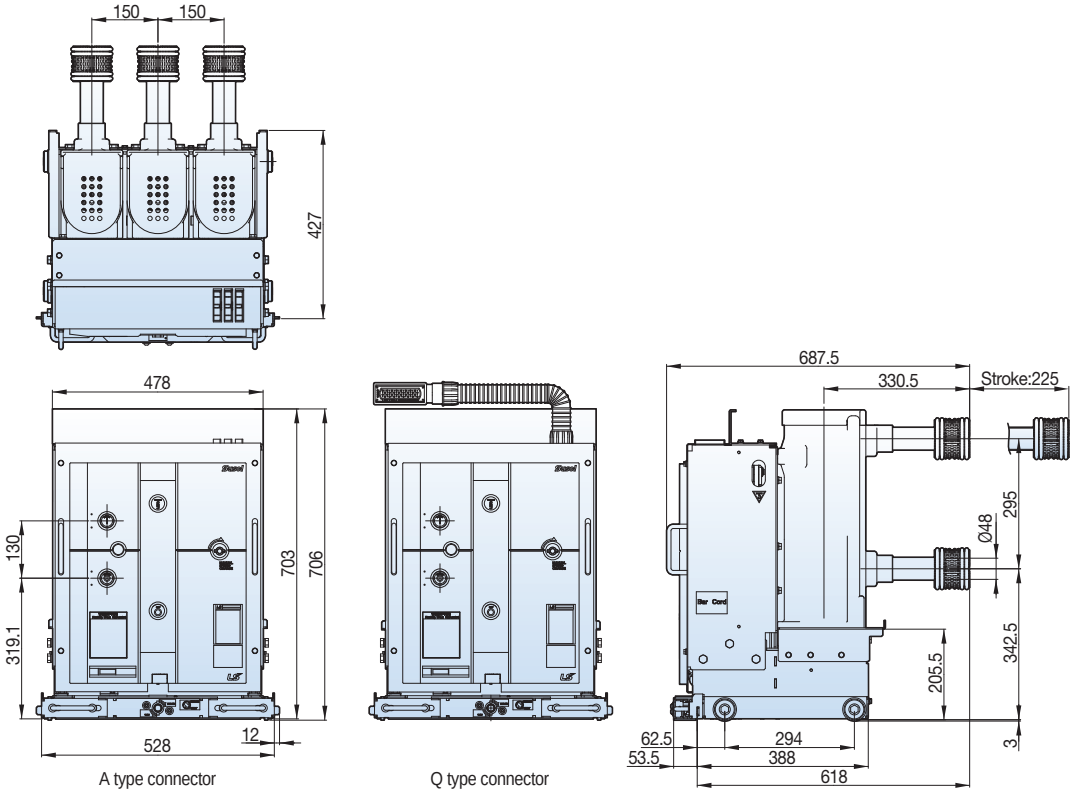

Withdrawable

Type
VCH-06Gs40A13
VCH-06Gs40A20
VCH-12Gs40A13
VCH-12Gs40A20

■ Gs type cradle, phase distance 150mm

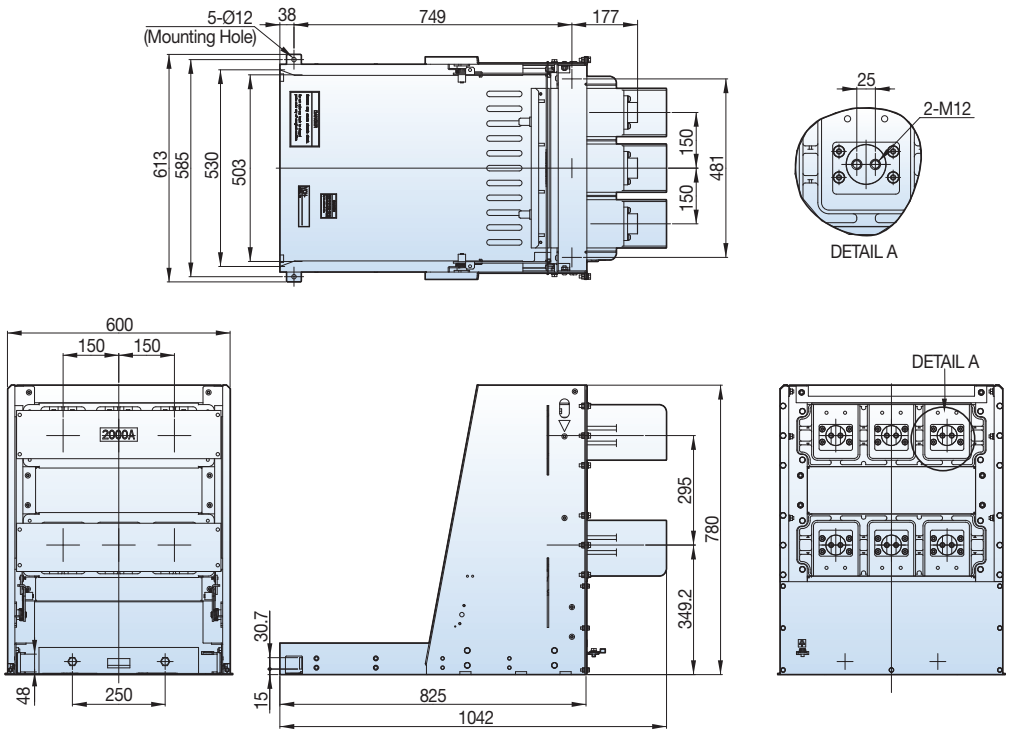

Dimensions - VH type (VH-06/12/17)

7.2/12kV, 31.5/40kA, 3150A

Withdrawable

Type
VH-06Gs32B32
VH-06Gs40B32
VH-12Gs32B32
VH-12Gs40B32

■ Gs type unit, phase distance 210mm

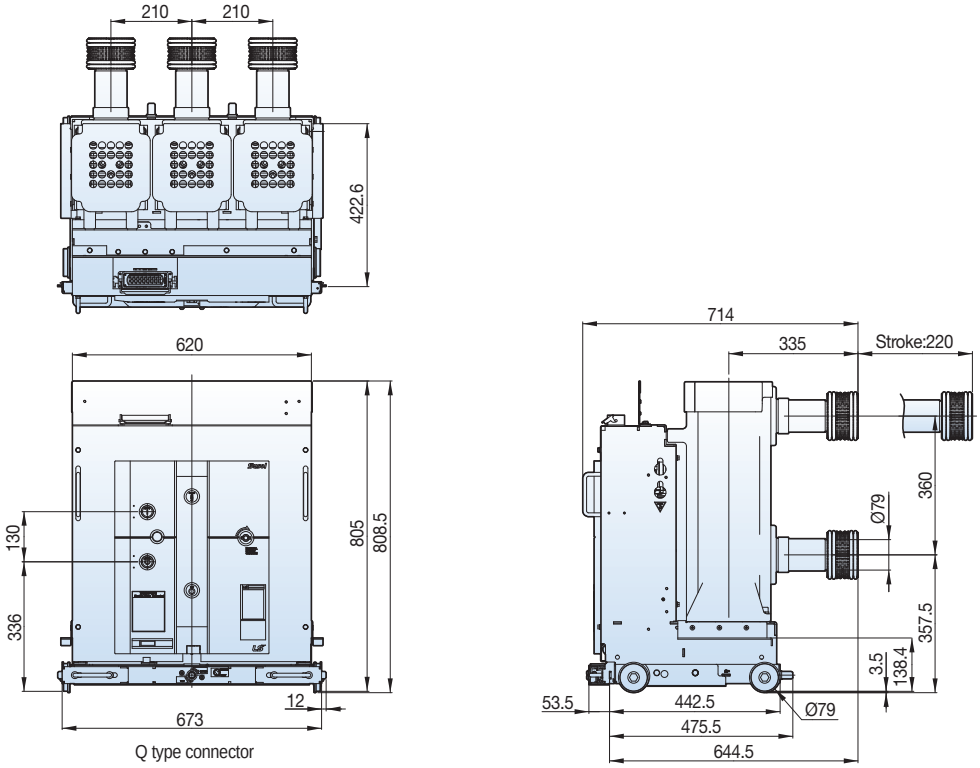

Withdrawable

Type
VCH-06Gs32B32
VCH-06Gs40B32
VCH-12Gs32B32
VCH-12Gs40B32

■ Gs type cradle, phase distance 210mm

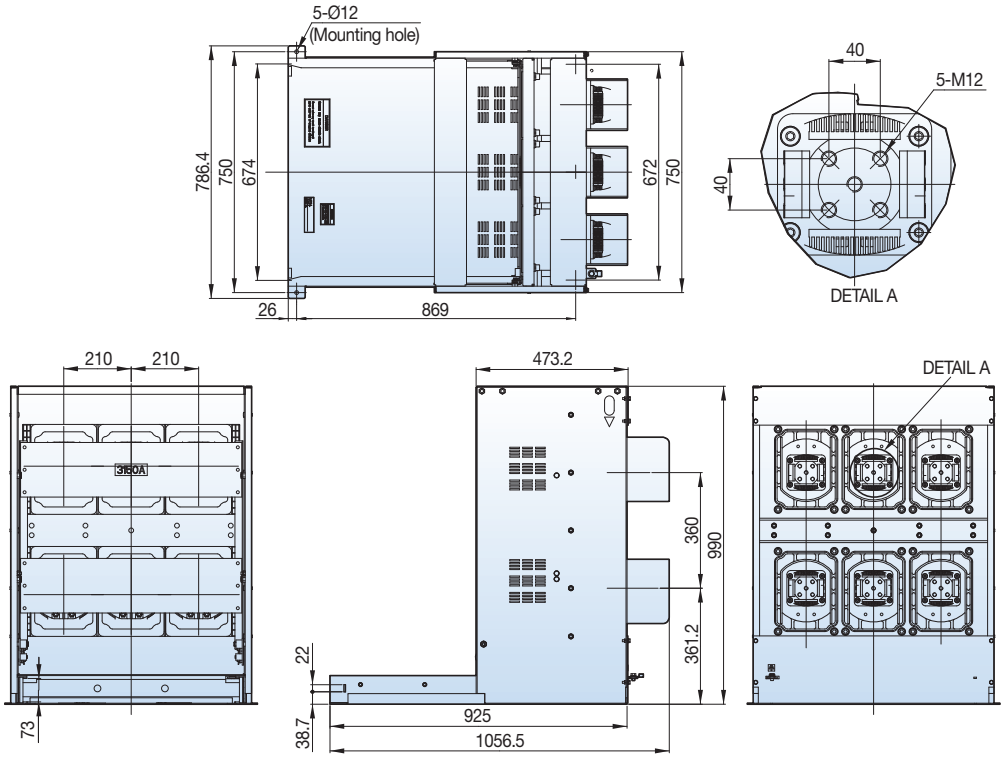

7.2/12kV, 40kA, 1250/2000A

Withdrawable

■ K type unit, phase distance 150mm, G / T (T) compatible

Type
VH-06K40K13
VH-06K40K20
VH-12K40K13
VH-12K40K20

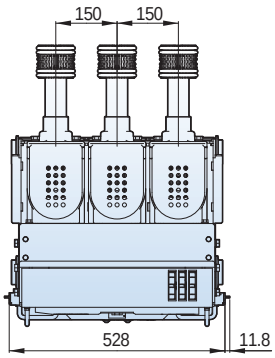

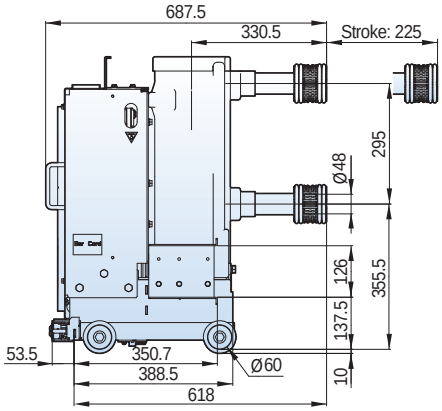

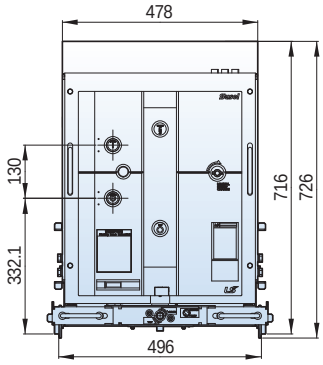

A type connector

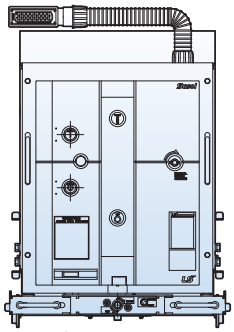

Q type connector

Withdrawable

■ K type unit, phase distance 150mm, G / T (T2) compatible

Type
VH-06K40A13
VH-06K40A20
VH-12K40A13
VH-12K40A20

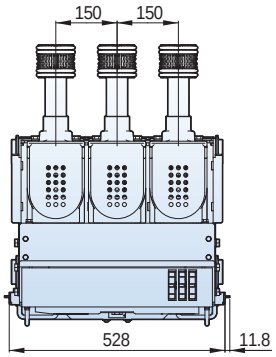

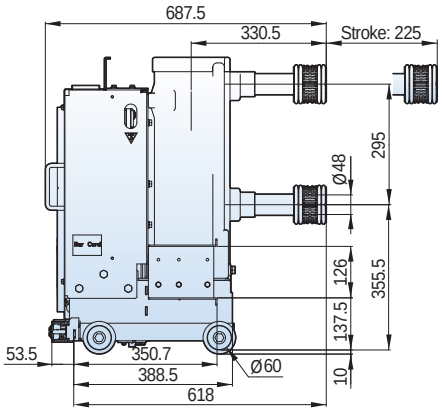

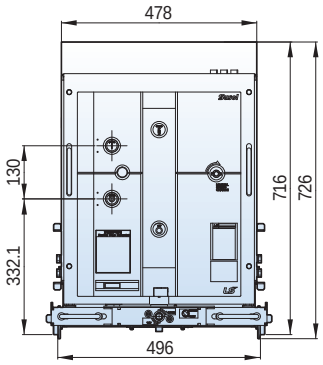

A type connector

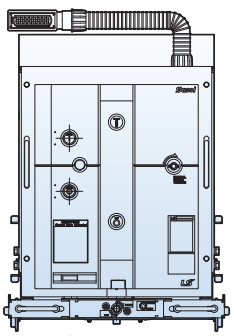

Q type connector

Dimensions - VH type (VH-06/12/17)

7.2/12kV, 40kA, 1250/2000A

Withdrawable

Type
VCH-06K40K13
VCH-06K40K20
VCH-12K40K13
VCH-12K40K20

■ K type cradle, phase distance 150mm

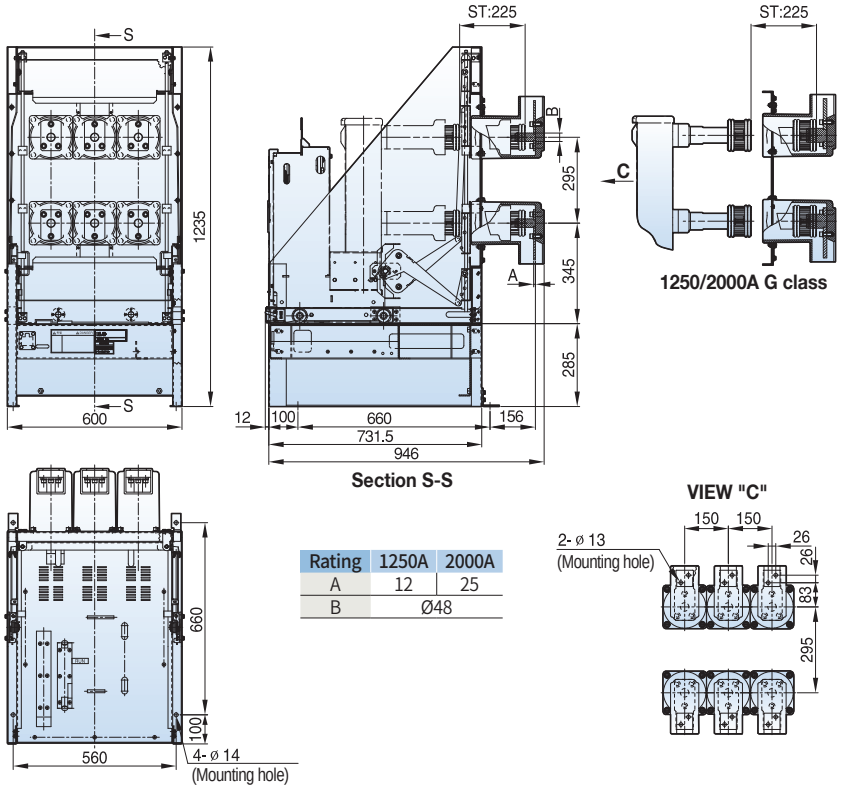

Rating	1250A	2000A
A	12	25
B	Ø48	

Withdrawable

Type
VCH-06K40A13
VCH-06K40A20
VCH-12K40A13
VCH-12K40A20

■ MCSG cradle T2 type, phase distance 150mm

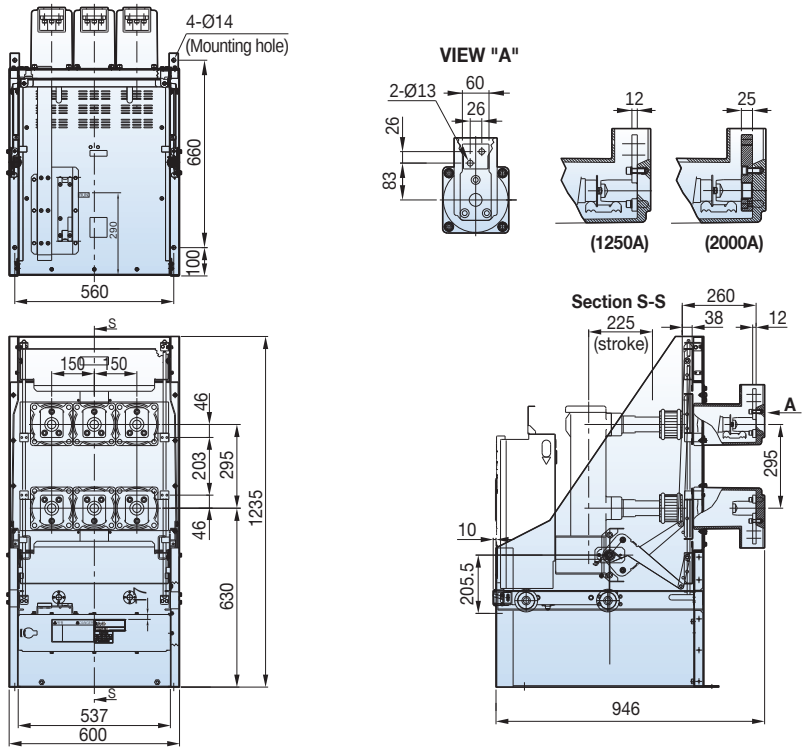

7.2/12kV, 40kA, 1250/2000A

Withdrawable

Type
VH-06K40B13
VH-06K40B20
VH-12K40B13
VH-12K40B20

■ K type unit, phase distance 210mm, G / T (T2) compatible

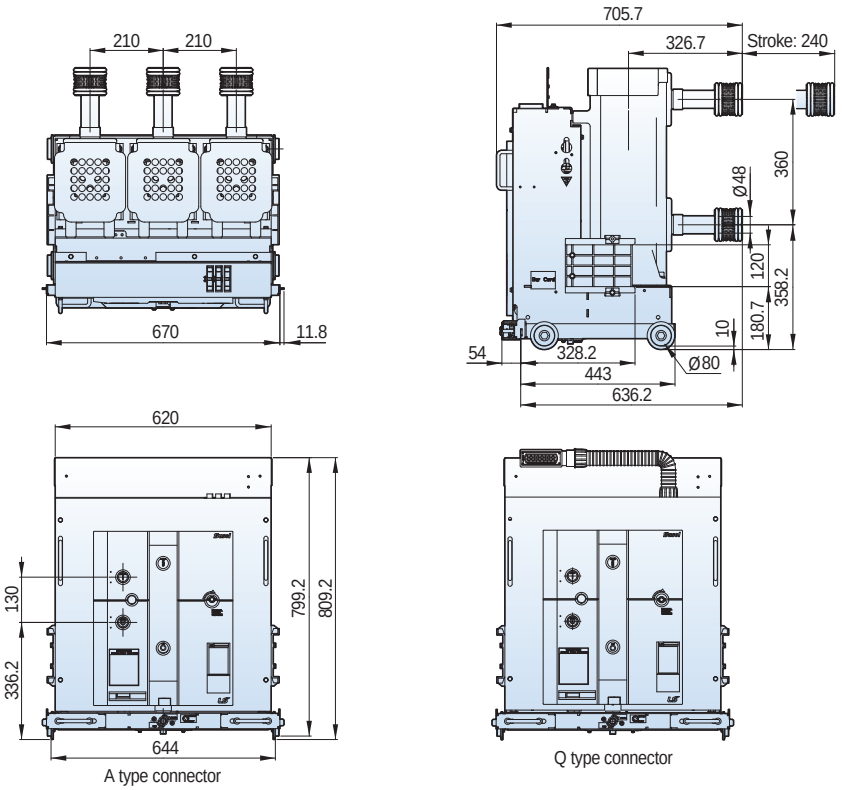

Withdrawable

Type
VCH-06K40B13
VCH-06K40B20
VCH-12K40B13
VCH-12K40B20

■ MCSG cradle T2 type, phase distance 210mm

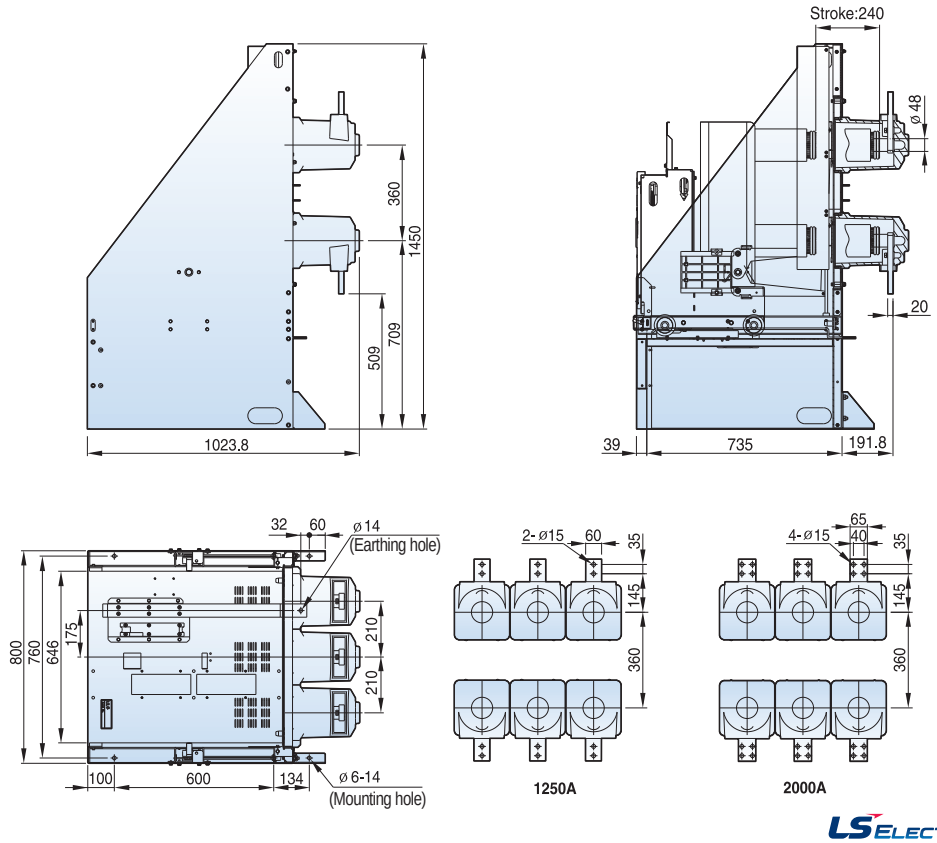

Dimensions - VH type (VH-06/12/17)

7.2/12kV, 31.5/40kA, 3150A

Withdrawable

Type
VH-06K32B32
VH-06K40B32
VH-12K32B32
VH-12K40B32

■ K type unit, phase distance 210mm, G / T (T2) compatible

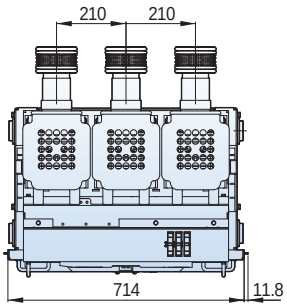

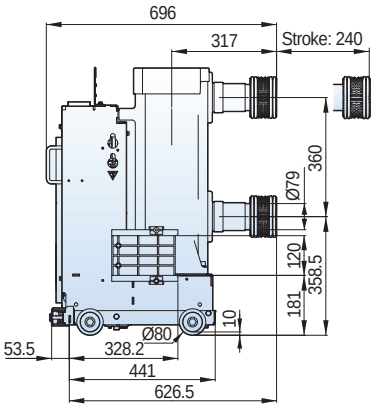

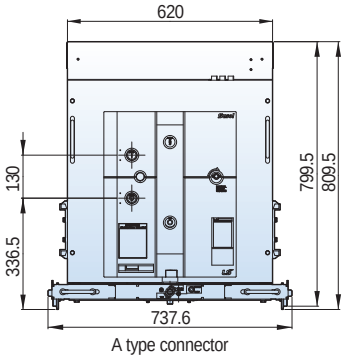

A type connector

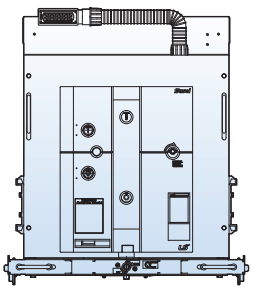

Q type connector

Withdrawable

Type
VCH-06K32B32
VCH-06K40B32
VCH-12K32B32
VCH-12K40B32

■ MCSG cradle T2 type, phase distance 210mm

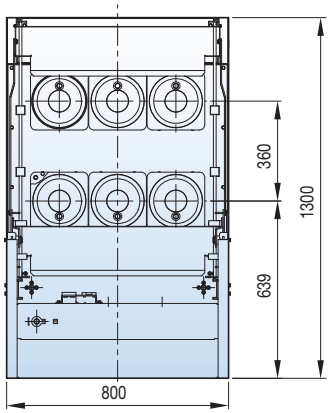

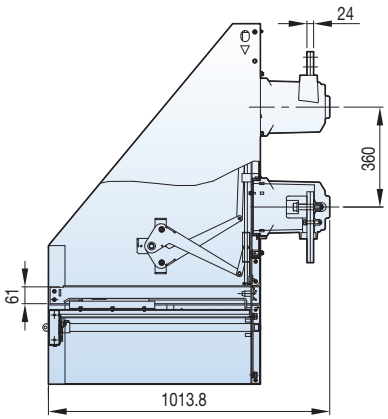

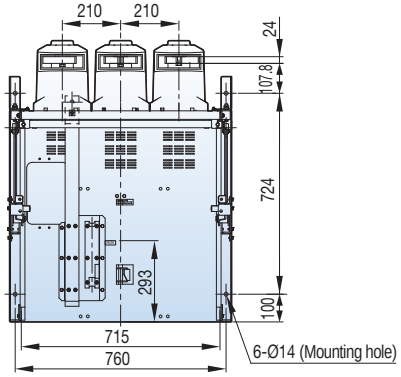

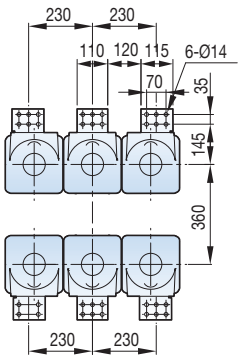

7.2/12kV, 40kA, 1250A

Withdrawable

Type
VH-06H40A13
VH-12H40A13

■ H type unit, phase distance 150mm

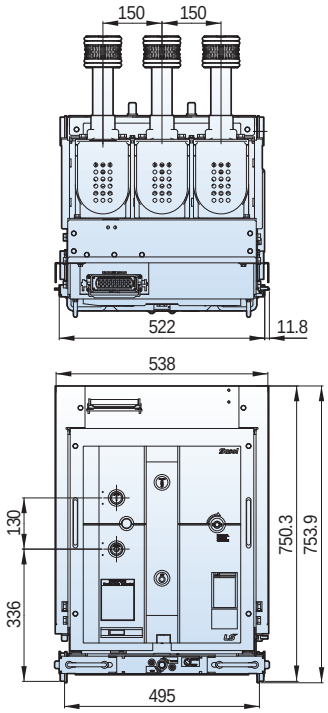

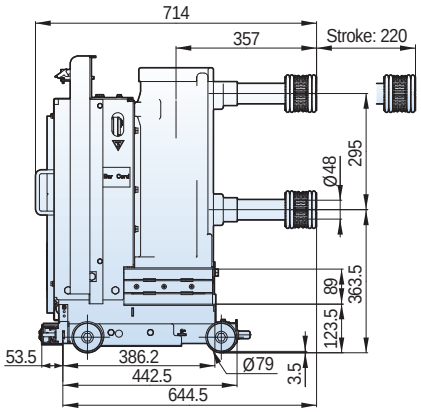

7.2/12kV, 40kA, 2000A

Withdrawable

Type
VH-06H40A20
VH-12H40A20

■ H type unit, phase distance 150mm

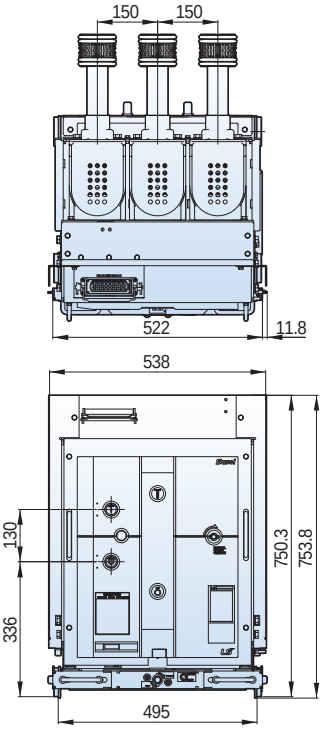

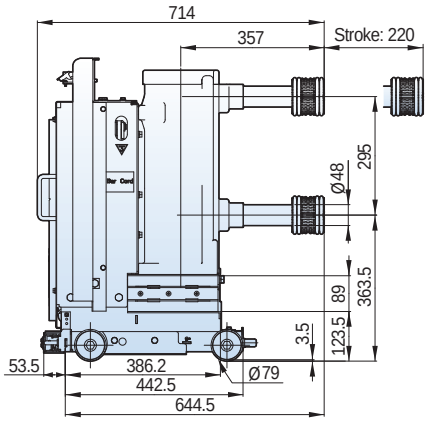

Dimensions - VH type (VH-06/12/17)

7.2/12kV, 40kA, 1250/2000A

Withdrawable

Type
VCH-06Ha40A13
VCH-06Ha40A20
VCH-12Ha40A13
VCH-12Ha40A20

■ Ha cradle, phase distance 150mm

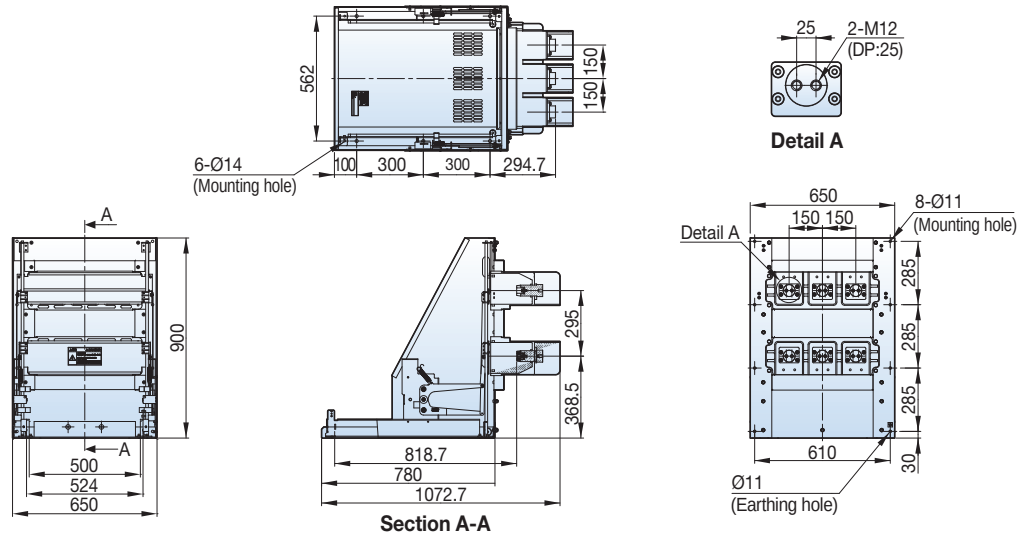

■ Ha cradle, phase distance 150mm (Earthing S/W Option type)

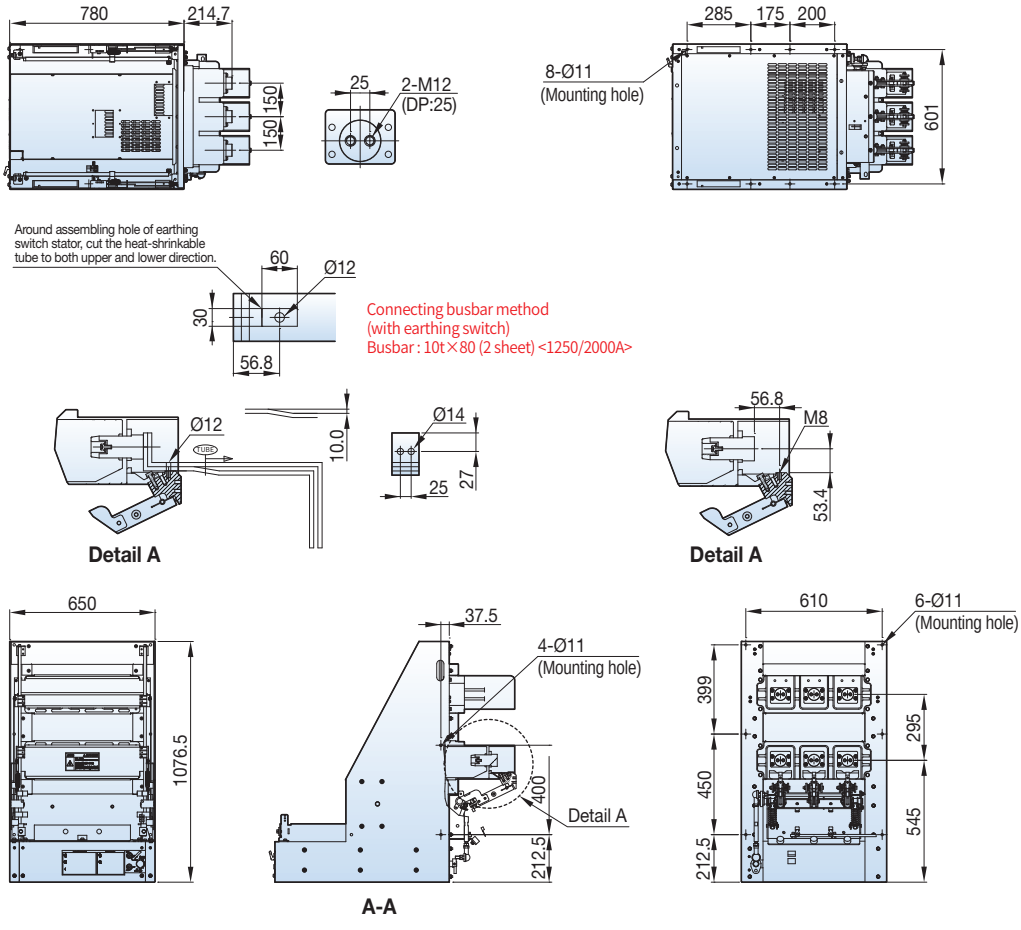

7.2/12kV, 40kA, 1250/2000A

Withdrawable

Type
VCH-06H40A13
VCH-06H40A20
VCH-12H40A13
VCH-12H40A20

■ H cradle, phase distance 150mm

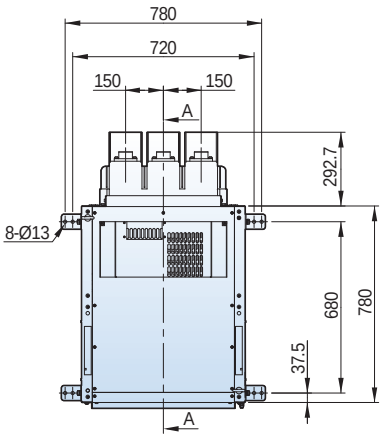

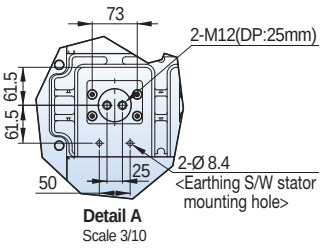

Detail A
Scale 3/10

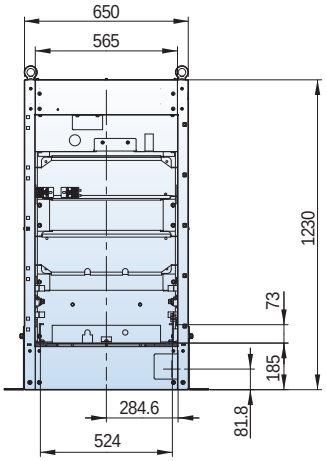

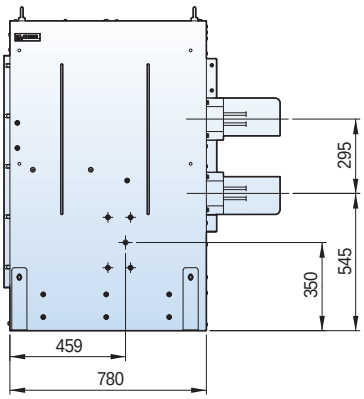

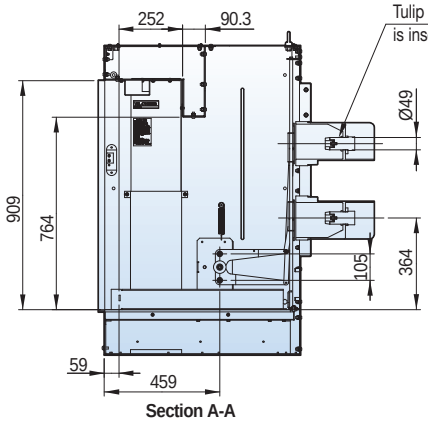

Section A-A

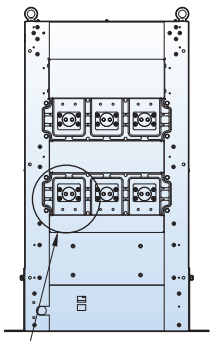

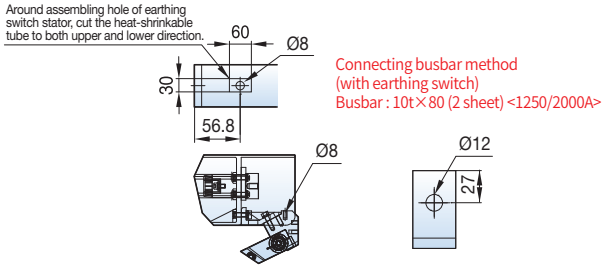

Dimensions - VH type (VH-06/12/17)

7.2/12/17.5kV, 40kA, 1250/2000A

Withdrawable

■ H type unit, phase distance 210mm

Type
VH-06H40B13
VH-06H40B20
VH-12H40B13
VH-12H40B20
VH-17H40B13
VH-17H40B20

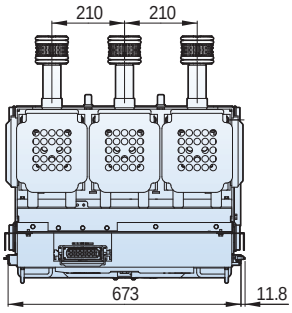

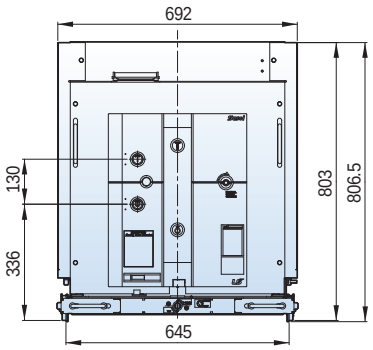

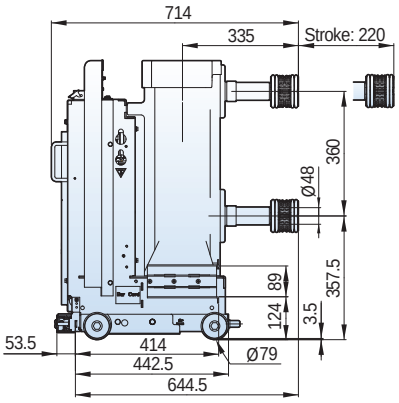

7.2/12/17.5kV, 31.5/40kA, 3150A

Withdrawable

■ H type unit, phase distance 210mm

Type
VH-06H32B32
VH-06H40B32
VH-12H32B32
VH-12H40B32
VH-17H32B32
VH-17H40B32

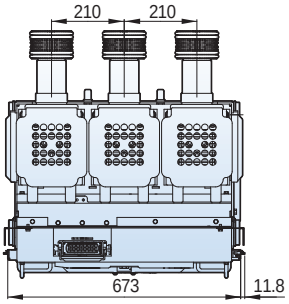

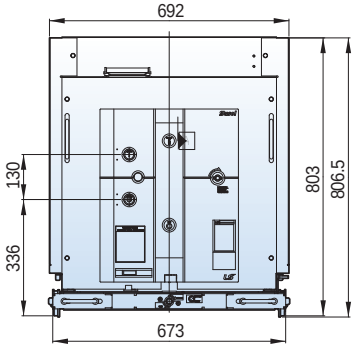

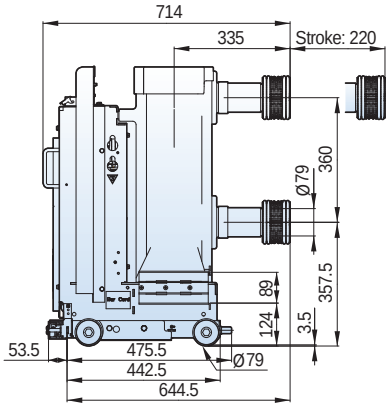

7.2/12/17.5kV, 40kA, 1250/2000A

Withdrawable

Type
VCH-06H40B13
VCH-06H40B20
VCH-12H40B13
VCH-12H40B20
VCH-17H40B13
VCH-17H40B20

■ H cradle, phase distance 210mm

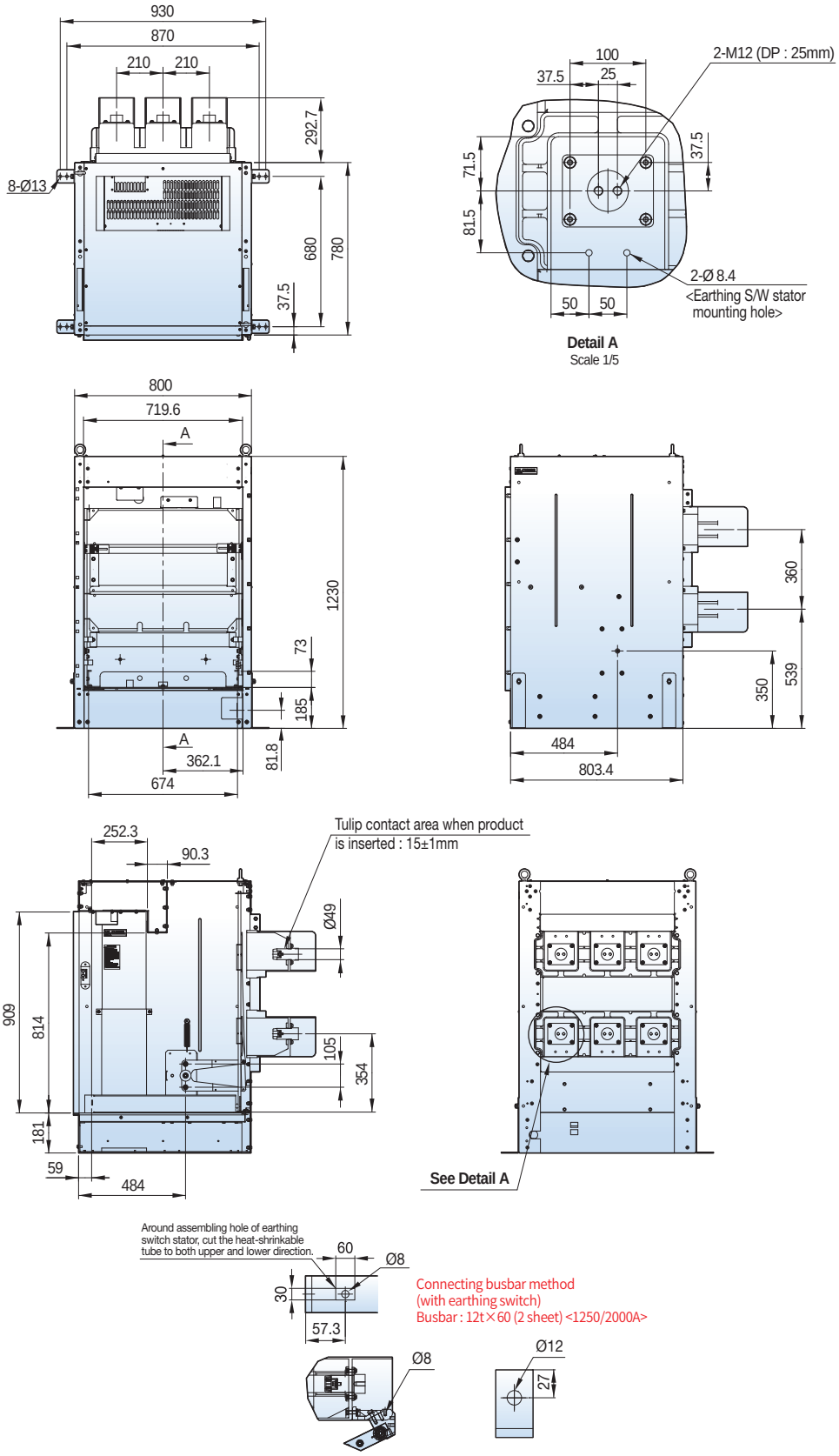

Dimensions - VH type (VH-06/12/17)

7.2/12/17.5kV, 31.5/40kA, 3150A

Withdrawable

Type
VCH-06Ha32B32
VCH-06Ha40B32
VCH-12Ha32B32
VCH-12Ha40B32
VCH-17Ha32B32
VCH-17Ha40B32

■ H cradle, phase distance 210mm

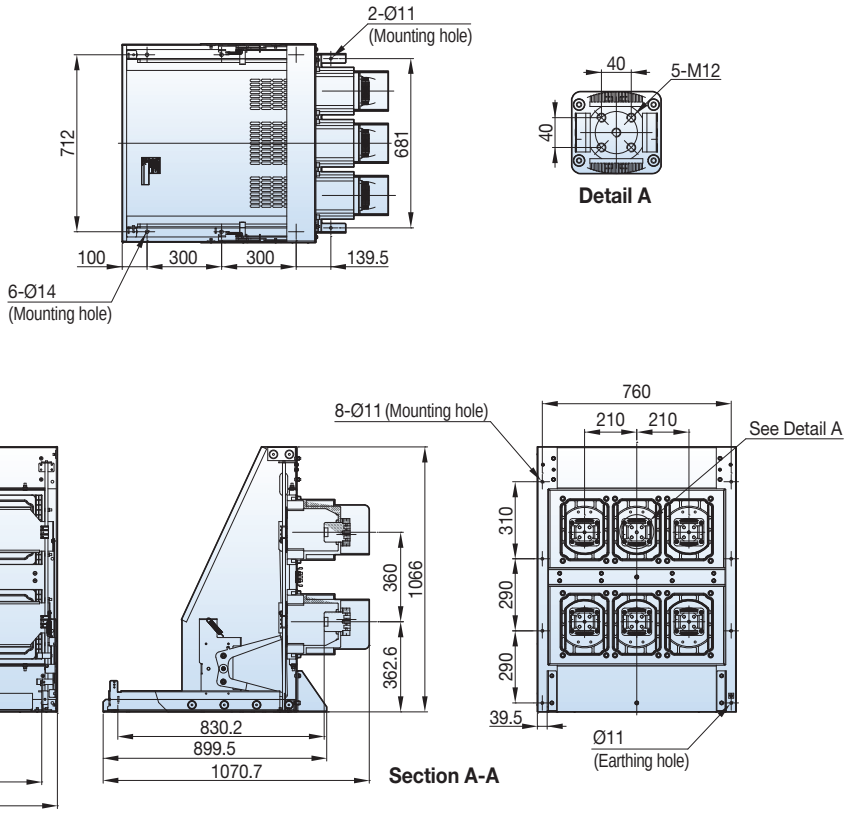

7.2/12/17.5kV, 31.5/40kA, 3150A

Withdrawable

Type
VCH-06H32B32
VCH-06H40B32
VCH-12H32B32
VCH-12H40B32
VCH-17H32B32
VCH-17H40B32

■ H cradle, phase distance 210mm

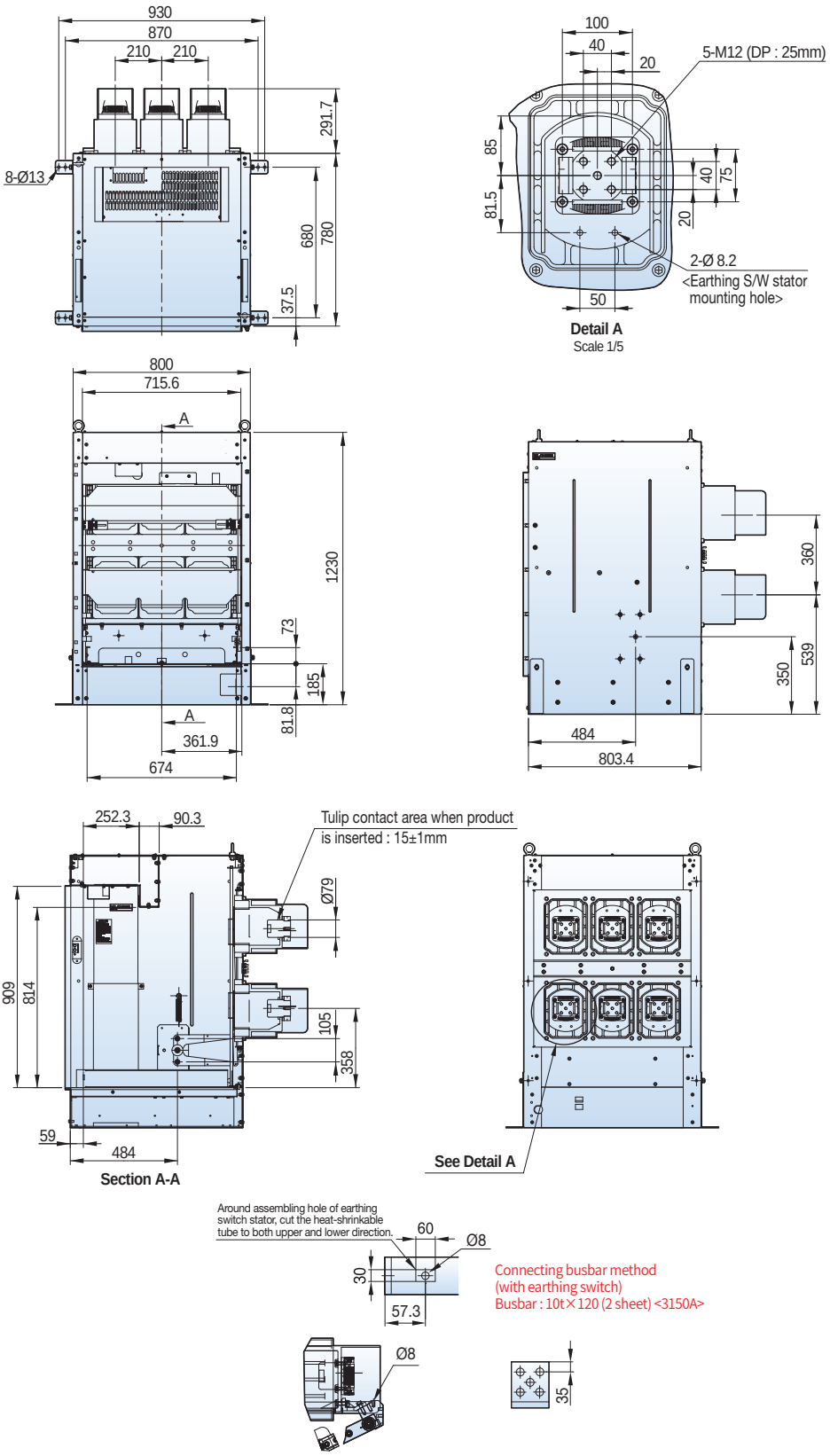

Dimensions - VH type (VH-06/12/17)

7.2/12/17.5kV, 31.5/40kA, 3150A

Withdrawable

Type
VH-06H32D32
VH-06H40D32
VH-12H32D32
VH-12H40D32
VH-17H32D32
VH-17H40D32

■ H type unit, phase distance 275mm

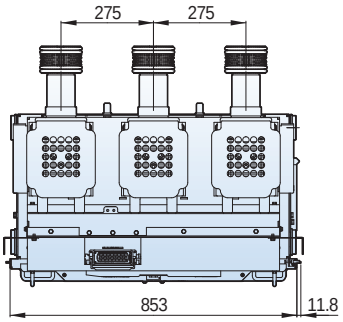

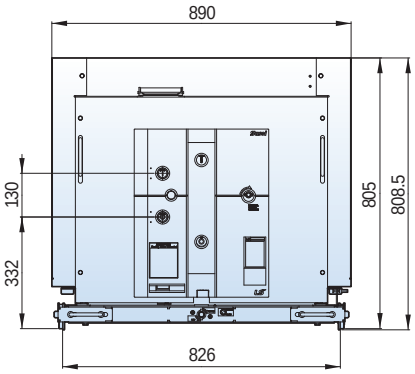

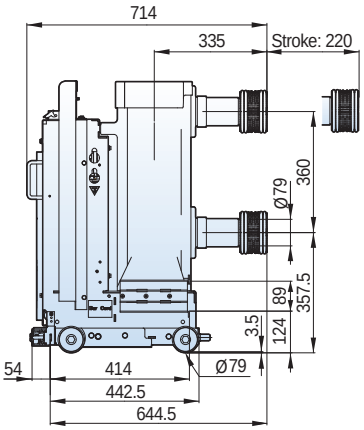

7.2/12/17.5kV, 31.5/40kA, 3150A

Withdrawable

Type
VCH-06H32D32
VCH-06H40D32
VCH-12H32D32
VCH-12H40D32
VCH-17H32D32
VCH-17H40D32

■ H cradle, phase distance 275mm

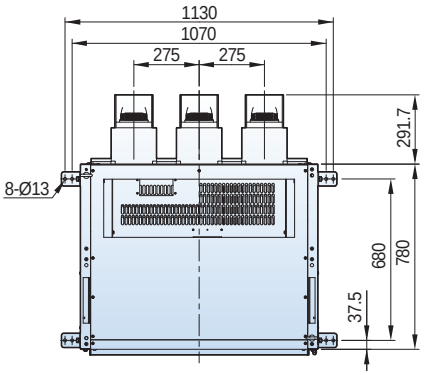

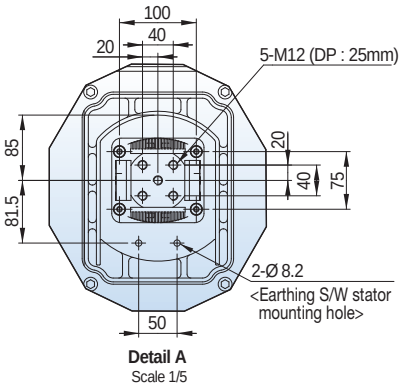

Detail A
Scale 1/5

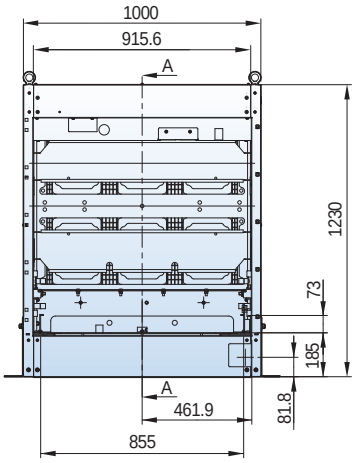

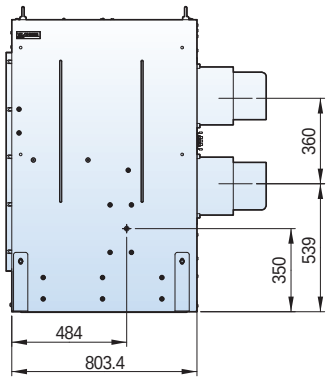

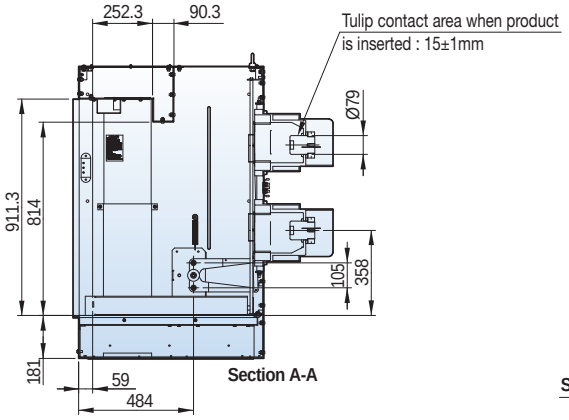

Section A-A

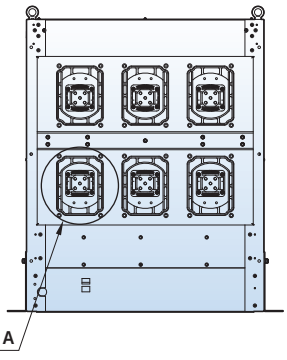

See Detail A

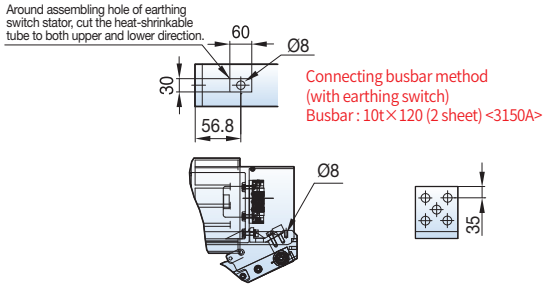

Dimensions - VH type (VH-06/12/17)

7.2/12/17.5kV, 50kA, 1250/2000A

Fixed

Type
VH-06P50B13
VH-06P50B20
VH-12P50B13
VH-12P50B20
VH-17P50B13
VH-17P50B20

■ P type, phase distance 210mm

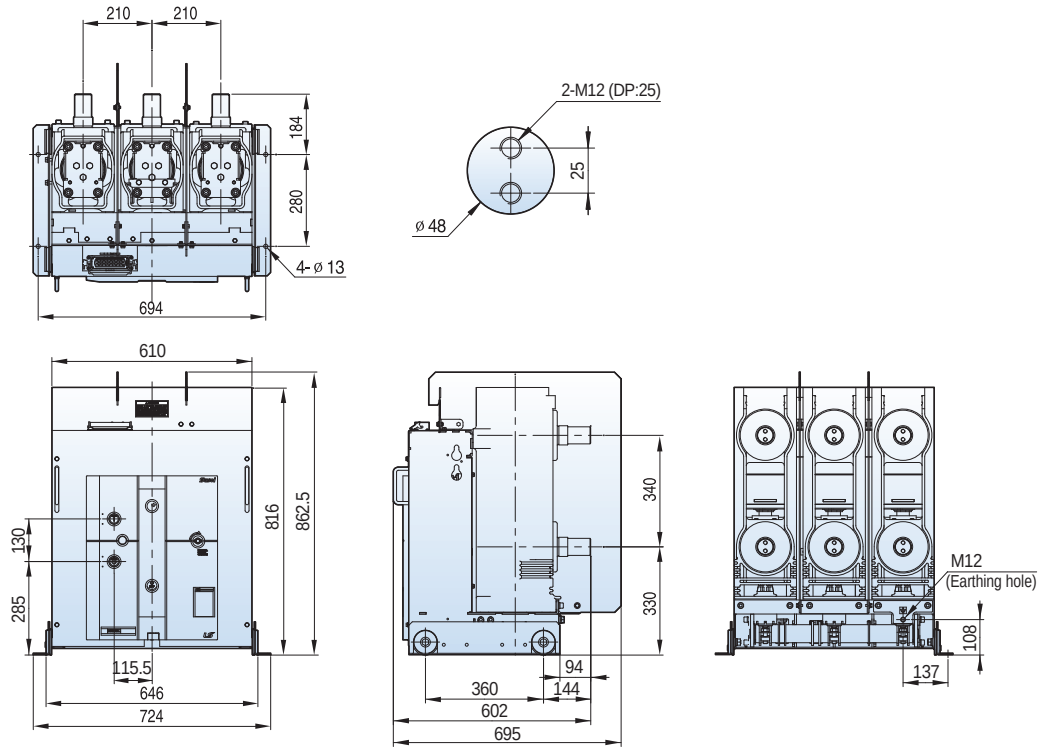

Withdrawable

Type
VH-06H50B13
VH-06H50B20
VH-12H50B13
VH-12H50B20
VH-17H50B13
VH-17H50B20

■ H type unit, phase distance 210mm

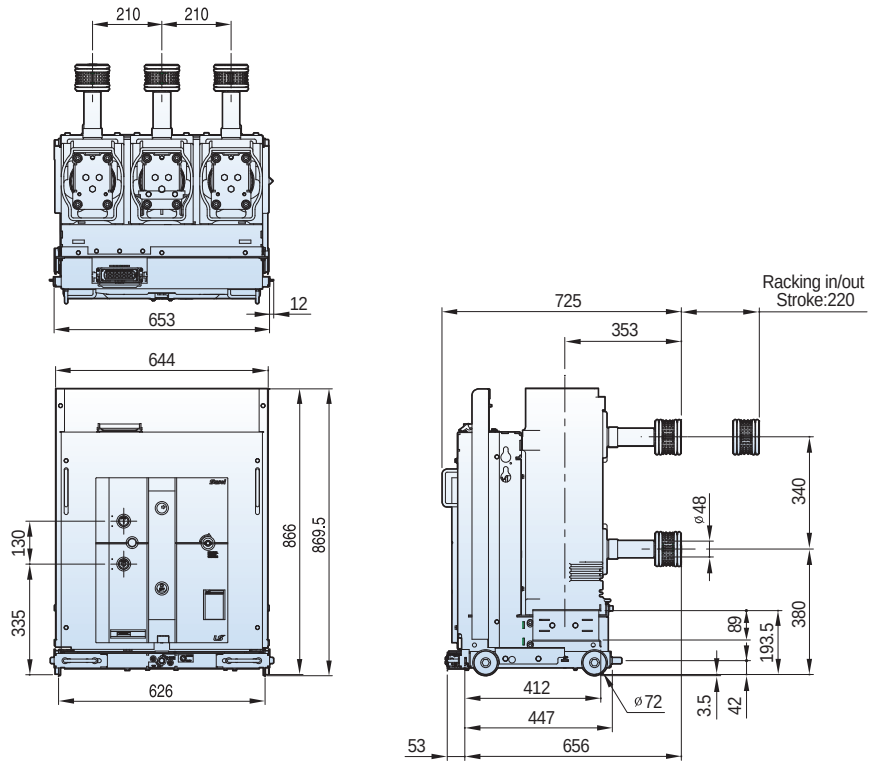

7.2/12/17.5kV, 50kA, 1250/2000A

Withdrawable

Type
VCH-06H50B13
VCH-06H50B20
VCH-12H50B13
VCH-12H50B20
VCH-17H50B13
VCH-17H50B20

■ H cradle, phase distance 210mm

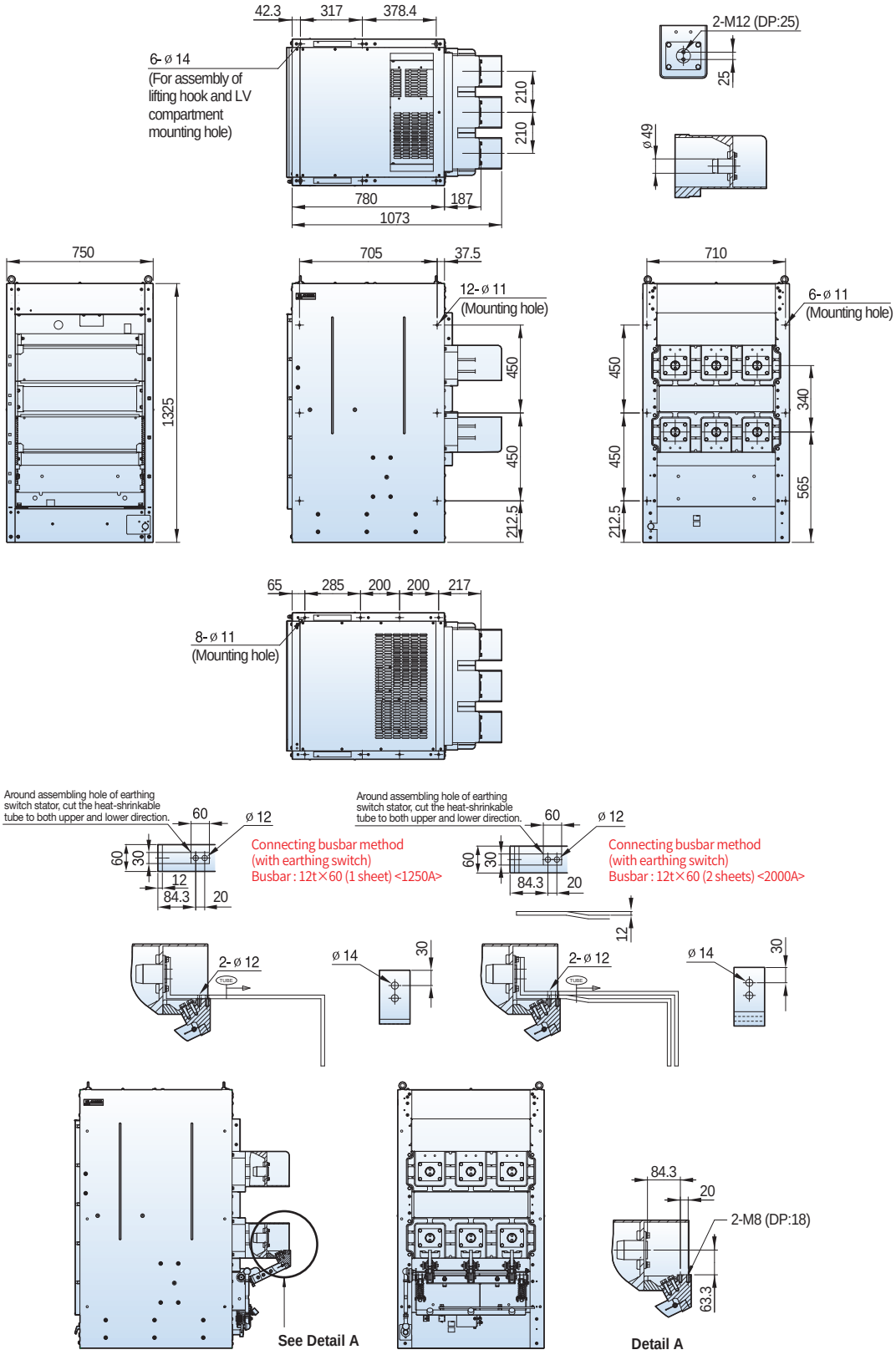

Dimensions - VH type (VH-06/12/17)

7.2/12/17.5kV, 50kA, 2500/3150A

Fixed

Type
VH-06P50D25
VH-06P50D32
VH-12P50D25
VH-12P50D32
VH-17P50D25
VH-17P50D32

■ P type, phase distance 275mm

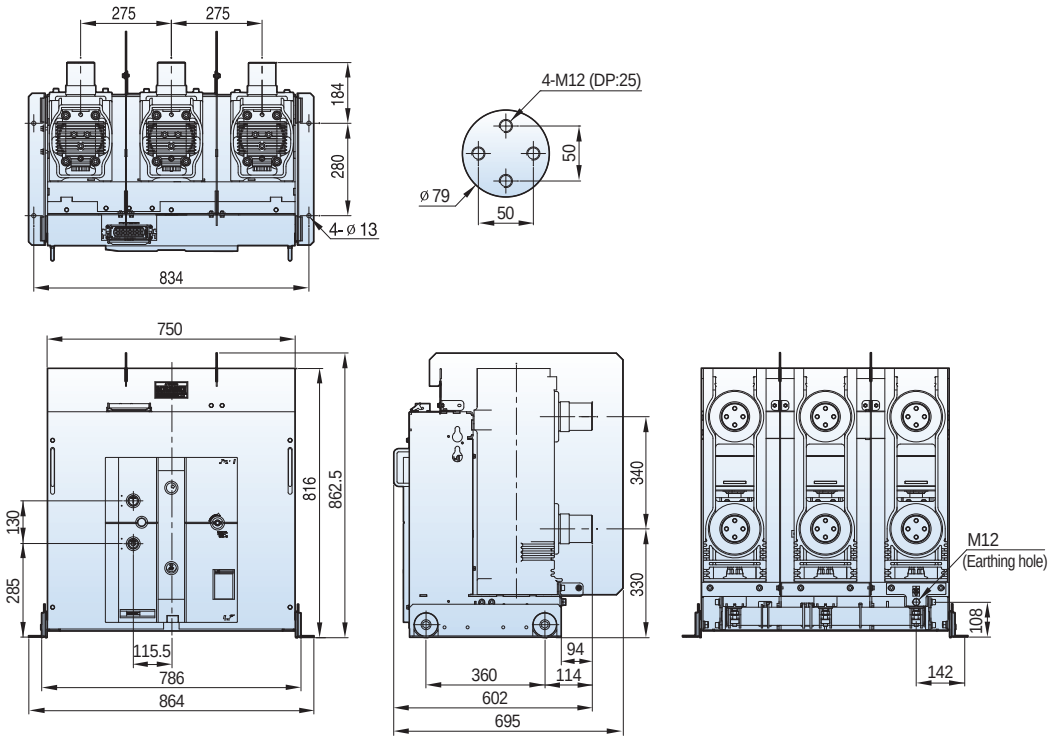

Withdrawable

Type
VH-06H50D25
VH-06H50D32
VH-12H50D25
VH-12H50D32
VH-17H50D25
VH-17H50D32

■ H type unit, phase distance 275mm

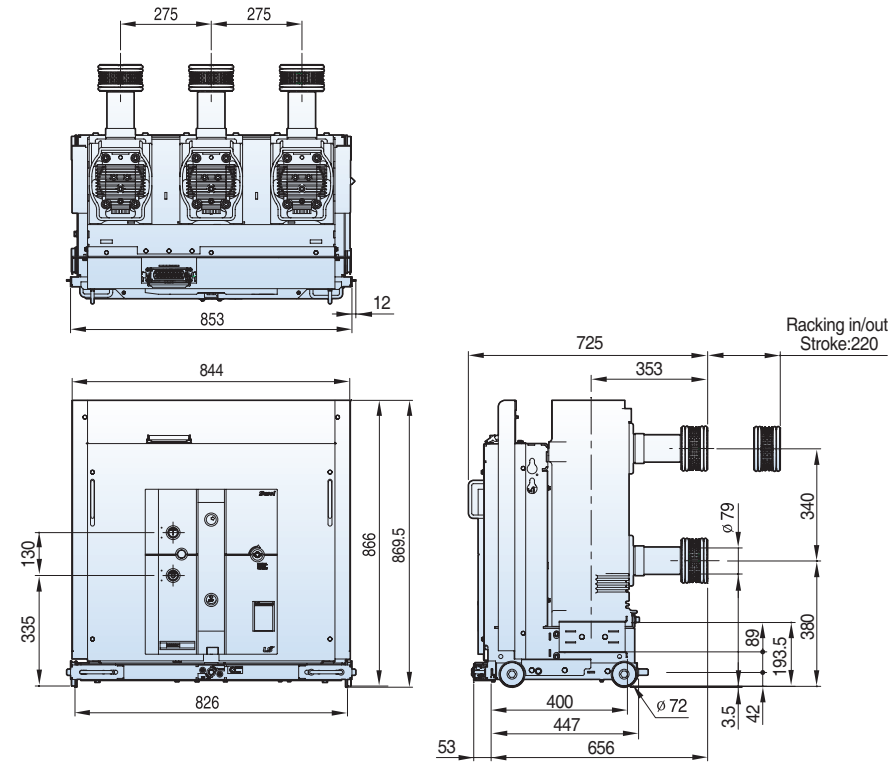

7.2/12/17.5kV, 50kA, 2500/3150A

Withdrawable

Type
VCH-06H50D25
VCH-06H50D32
VCH-12H50D25
VCH-12H50D32
VCH-17H50D25
VCH-17H50D32

■ H cradle, phase distance 275mm

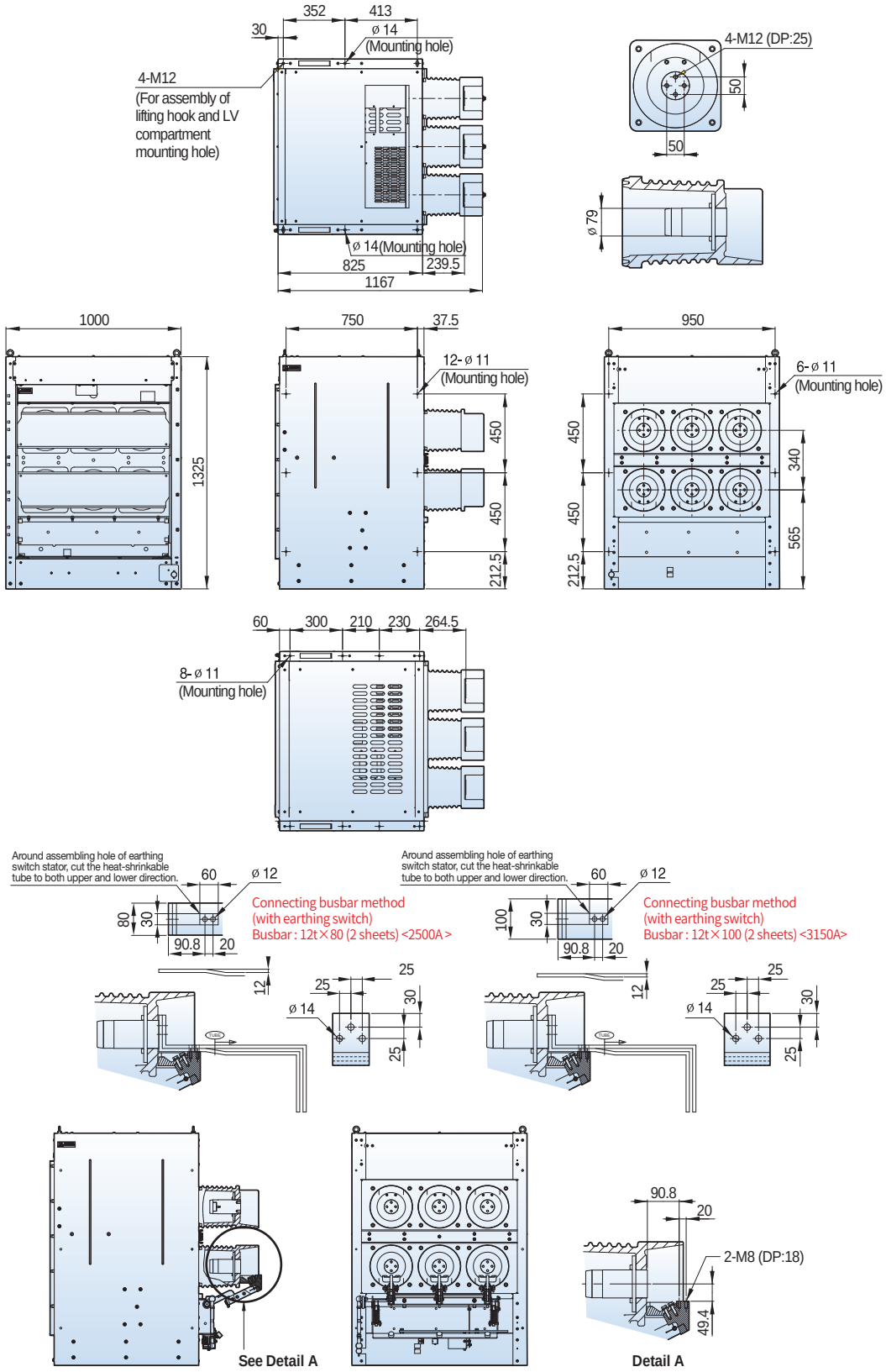

Dimensions - VH type (VH-06/12/17)

7.2/12/17.5kV, 40/50kA, 4000A

Fixed

Type
VH-06P40D40
VH-06P50D40
VH-12P40D40
VH-12P50D40
VH-17P40D40
VH-17P50D40

■ P type, phase distance 275mm

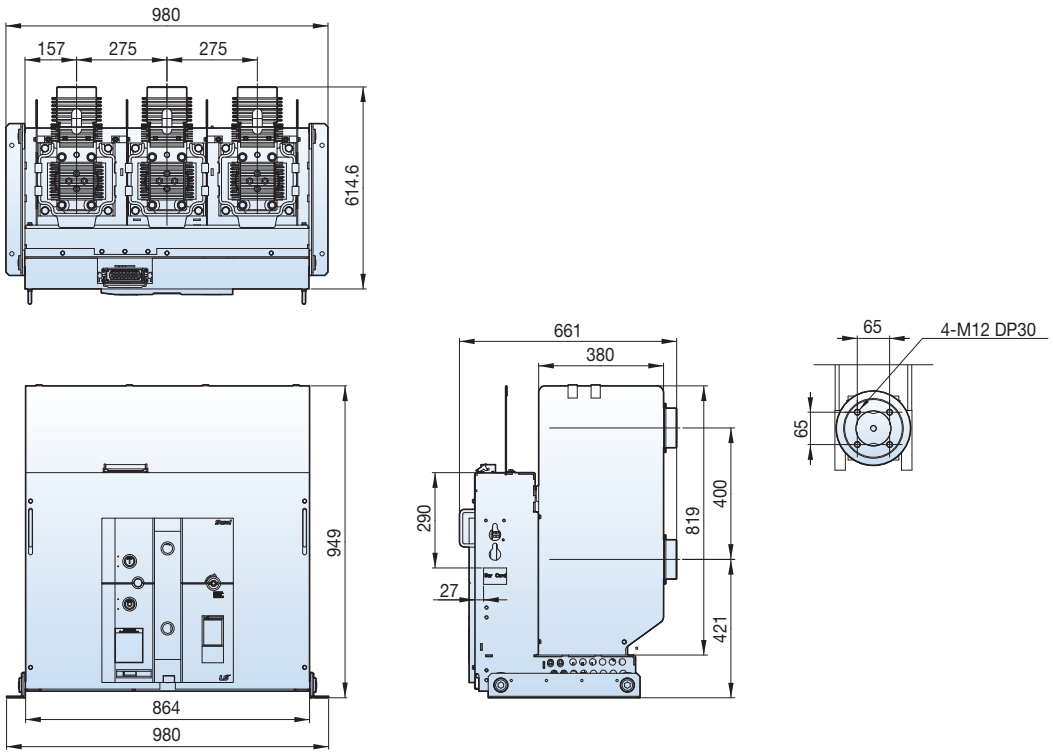

Withdrawable

Type
VH-06H40D40
VH-06H50D40
VH-12H40D40
VH-12H50D40
VH-17H40D40
VH-17H50D40

■ H type unit, phase distance 275mm

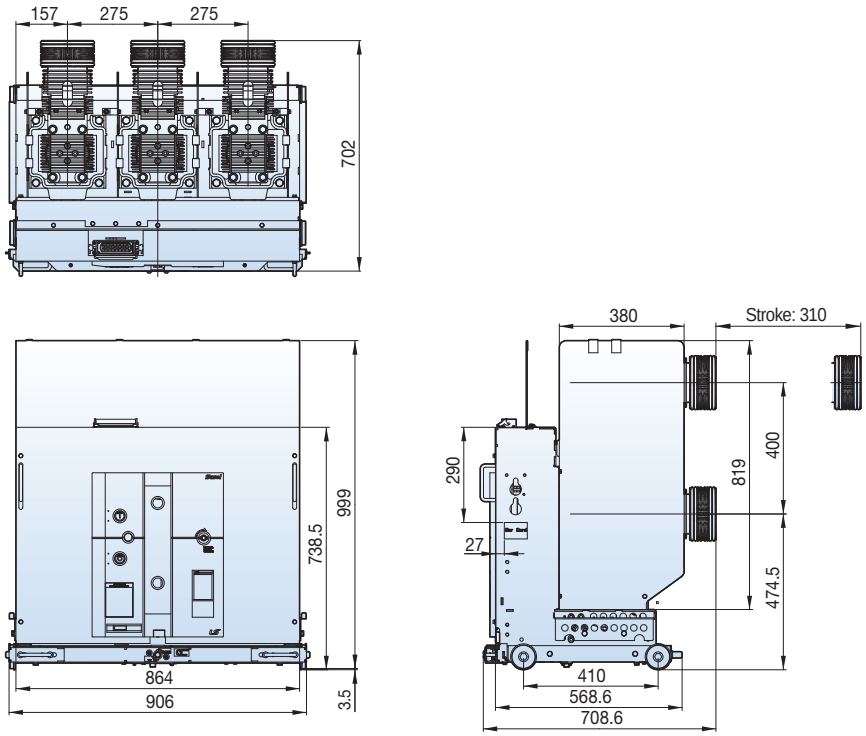

7.2/12/17.5kV, 40/50kA, 4000A

Withdrawable

Type
VCH-06Ha40D40
VCH-06Ha50D40
VCH-12Ha40D40
VCH-12Ha50D40
VCH-17Ha40D40
VCH-17Ha50D40

■ Ha type cradle, phase distance 275mm, Normal Type

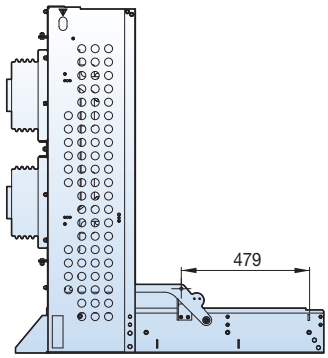

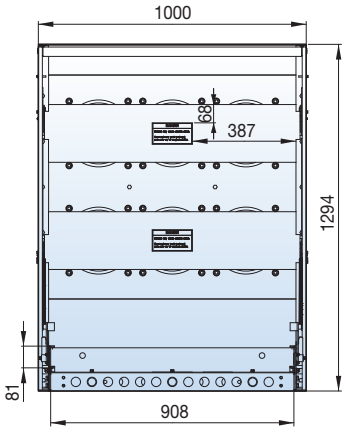

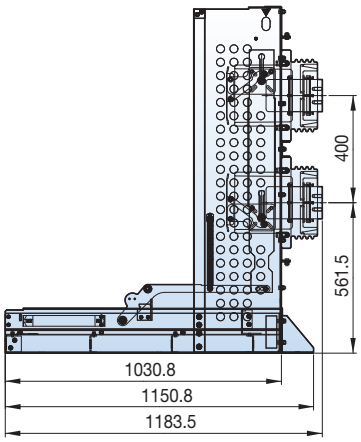

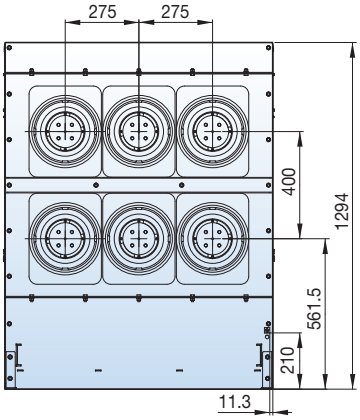

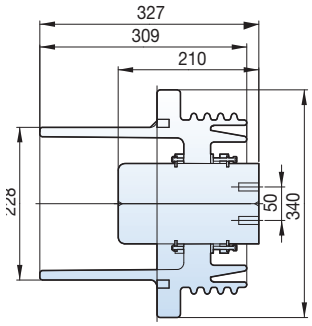

Section A-A

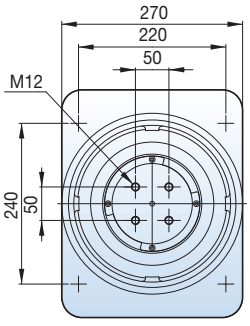

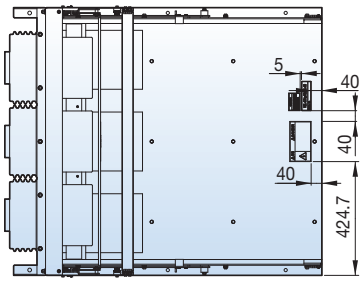

Dimensions - VH type (VH-06/12/17)

7.2/12/17.5kV, 40/50kA, 4000A

Withdrawable

Type
VCH-06Ha40D40-A1FG
VCH-06Ha50D40-A1FG
VCH-12Ha40D40-A1FG
VCH-12Ha50D40-A1FG
VCH-17Ha40D40-A1FG
VCH-17Ha50D40-A1FG

* Even if only one of the 1, F, or G option is applied, the external drawing is as same as above type.

■ Ha type cradle, phase distance 275mm, with Earthing Switch
(The same applies to MOC or TOC)

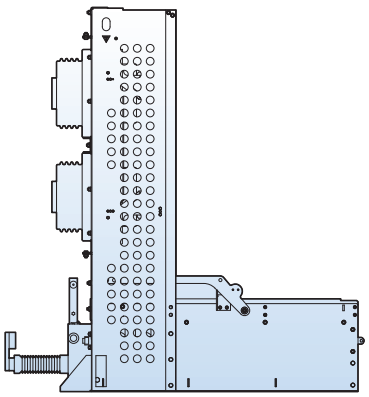

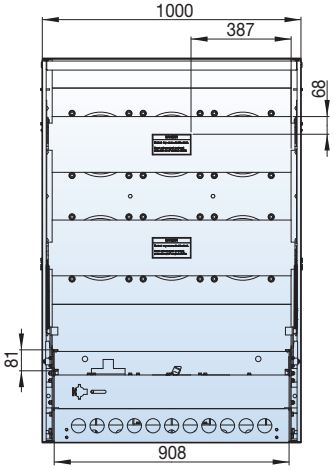

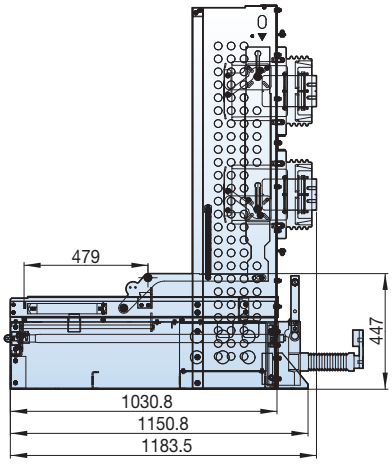

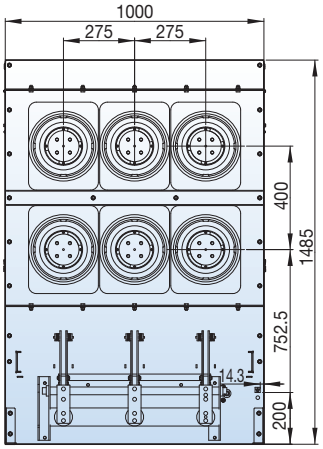

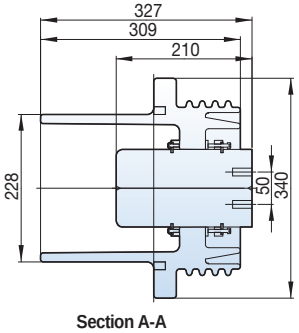

Section A-A

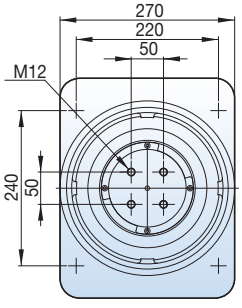

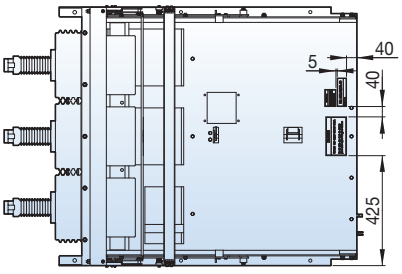

7.2/12/17.5kV, 40/50kA, 4000A

Withdrawable

Type
VCH-06Hb40D40
VCH-06Hb50D40
VCH-12Hb40D40
VCH-12Hb50D40
VCH-17Hb40D40
VCH-17Hb50D40

■ Hb type cradle, phase distance 275mm

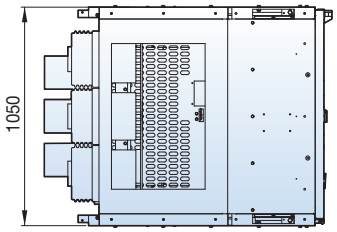

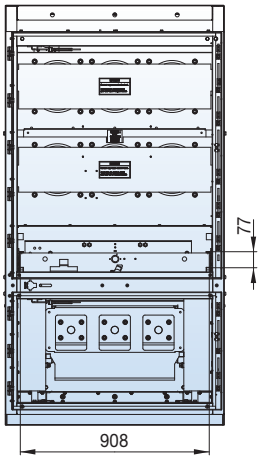

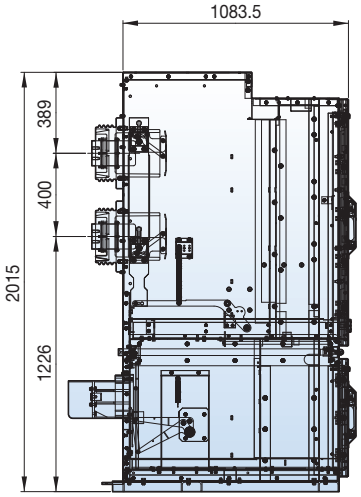

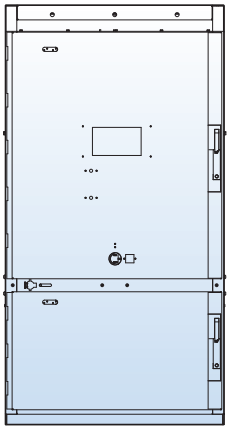

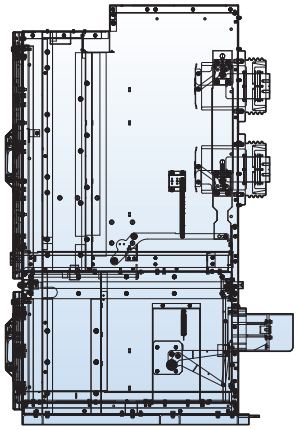

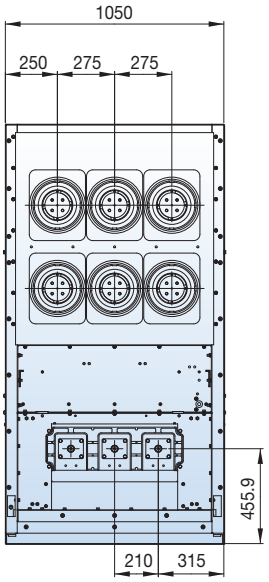

Dimensions - VH type (VH-20/25)

7.2/12kV, 40/50kA, 5000A

Withdrawable

Type

VH-06H40L50
VH-06H50L50
VH-12H40L50
VH-12H50L50

■ H type unit, phase distance 320mm

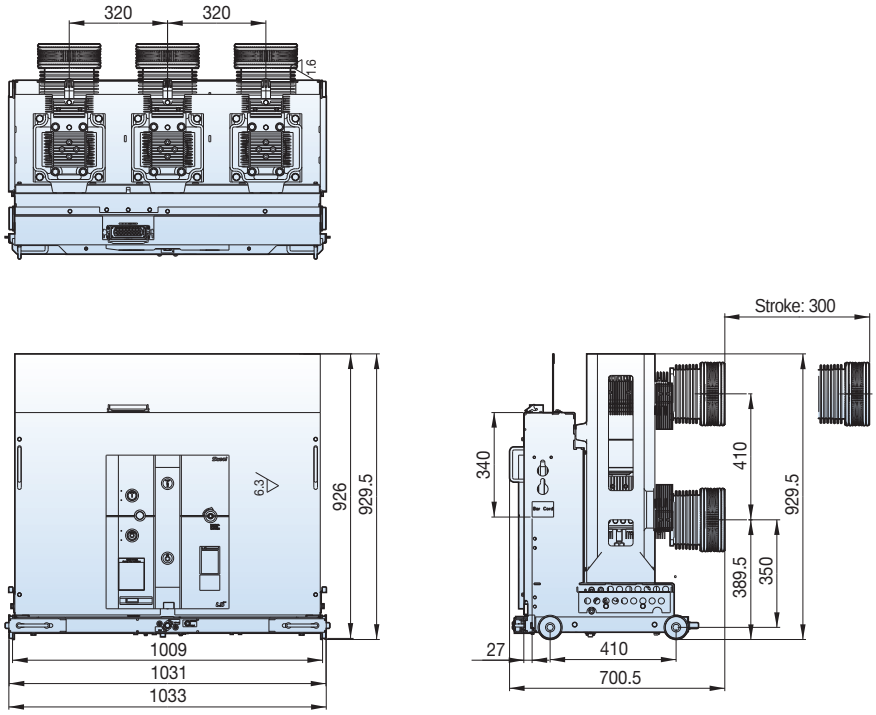

Withdrawable

Type

VCH-06Ha40L50
VCH-06Ha50L50
VCH-12Ha40L50
VCH-12Ha50L50

■ Ha type cradle, phase distance 320mm, Normal Type

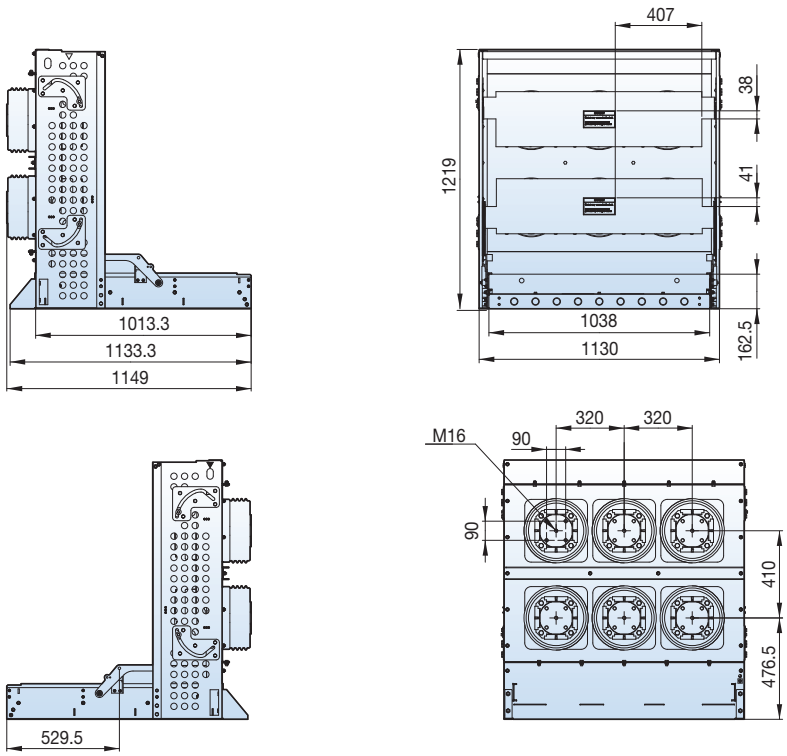

7.2/12kV, 40/50kA, 5000A

Withdrawable

Type
VCH-06Ha40L50-A1FG
VCH-06Ha50L50-A1FG
VCH-12Ha40L50-A1FG
VCH-12Ha50L50-A1FG
VCH-06Ha40L50-A3FG
VCH-06Ha50L50-A3FG
VCH-12Ha40L50-A3FG
VCH-12Ha50L50-A3FG

* Even if only one of the 1, F, or G option is applied, the external drawing is as same as above type. (A1 and A3 cannot be selected at the same time)

■ Ha type cradle, phase distance 320mm, with Earthing Switch (The same applies to MOC or TOC)

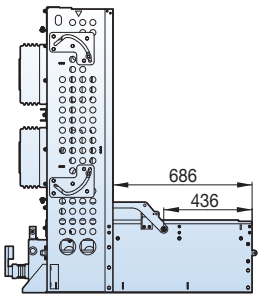

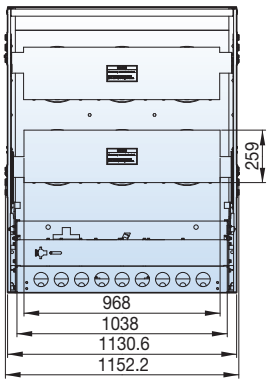

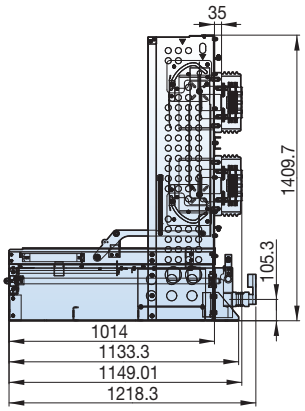

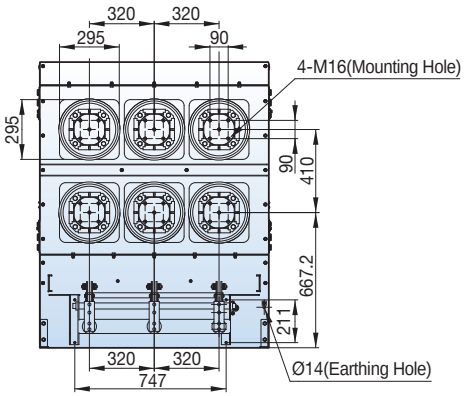

Dimensions - VH type (VH-20/25)

24/25.8kV, 25kA, 2500A

Fixed

Type
VH-20P25D25
VH-25P25D25

■ P type, phase distance 275mm

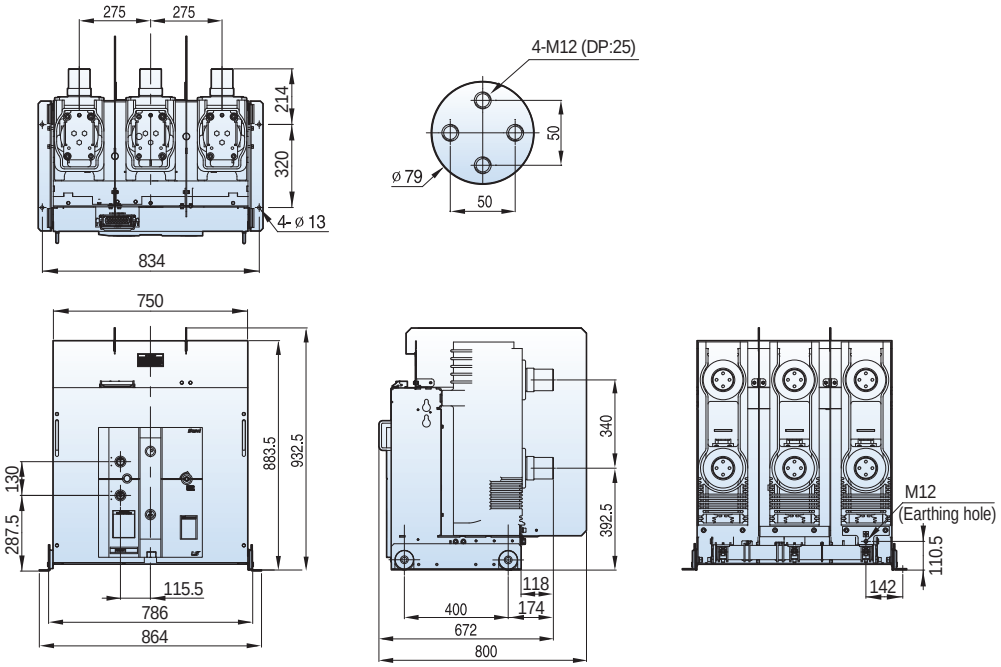

Withdrawable

Type
VH-20H25D25
VH-25H25D25

■ H type unit, phase distance 275mm

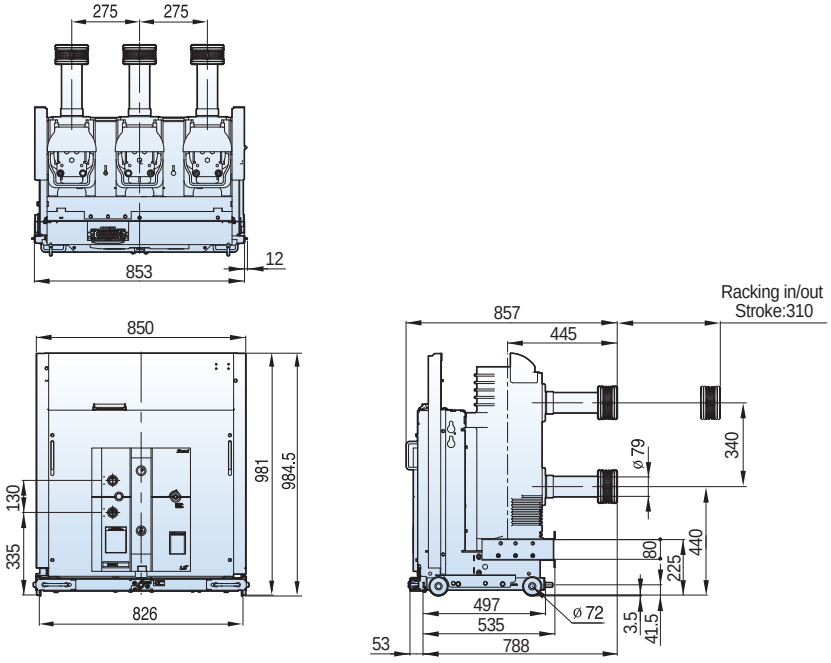

24/25.8kV, 25kA, 2500A

Withdrawable

Type
VCH-20H25D25
VCH-25H25D25

■ H cradle, phase distance 275mm

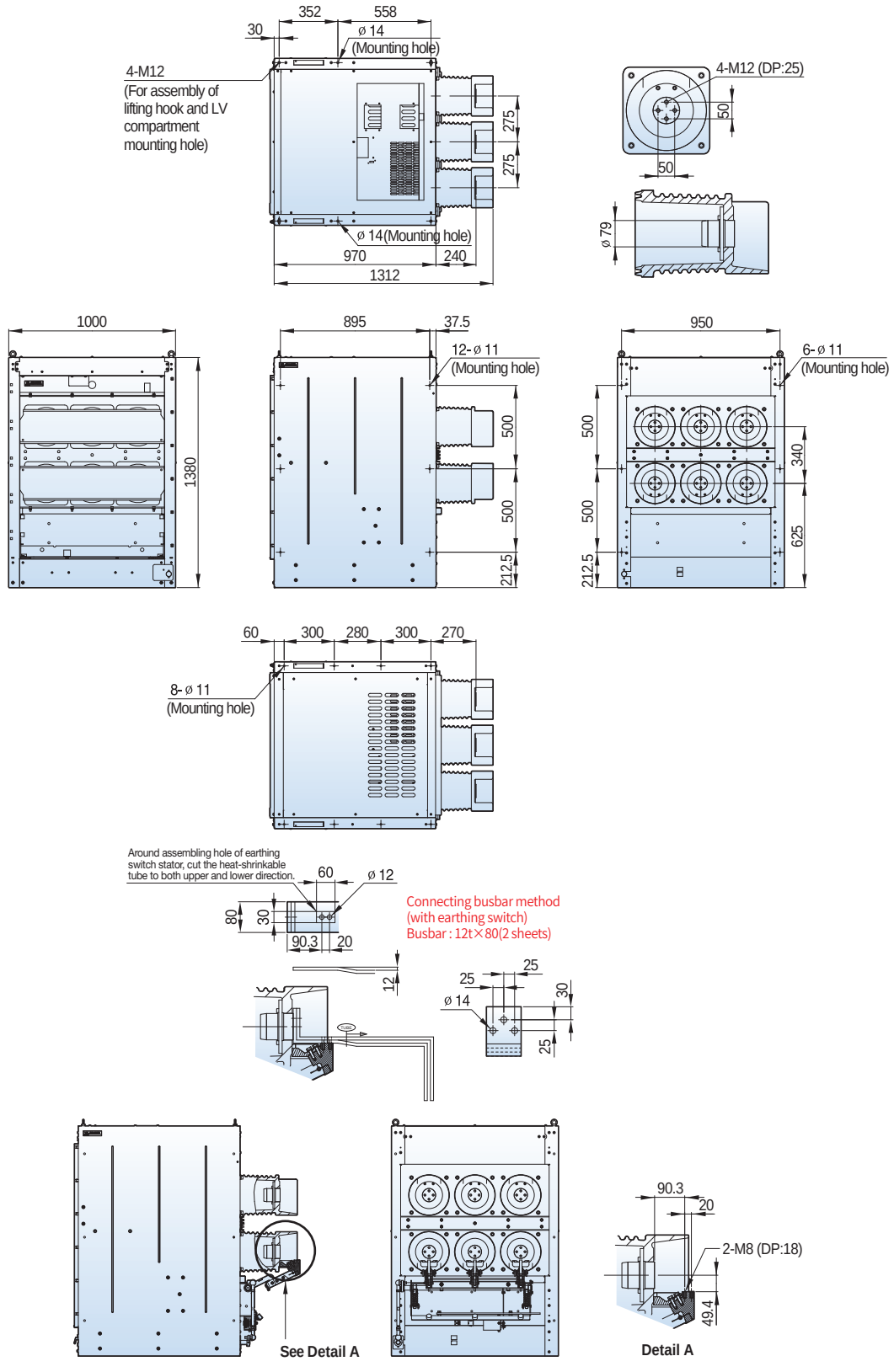

Dimensions - VH type (VH-20/25)

24/25.8kV, 31.5/40kA, 1250/2000A

Fixed

Type
VH-20P32B13
VH-20P32B20
VH-20P40B13
VH-20P40B20
VH-25P32B13
VH-25P32B20
VH-25P40B13
VH-25P40B20

■ P type, phase distance 210mm

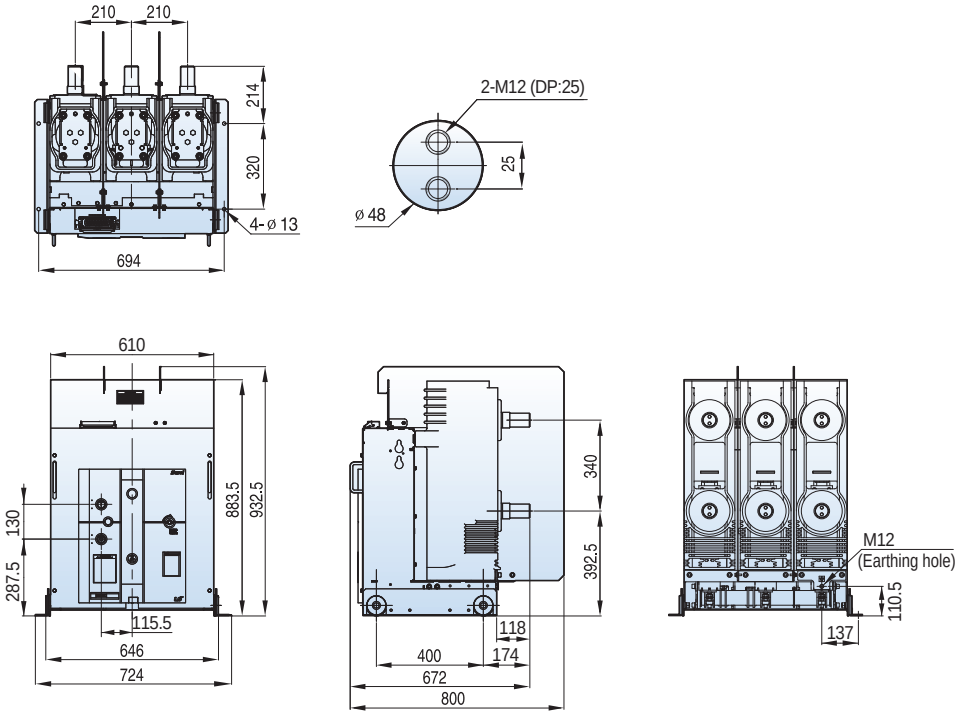

Withdrawable

Type
VH-20H32B13
VH-20H32B20
VH-20H40B13
VH-20H40B20
VH-25H32B13
VH-25H32B20
VH-25H40B13
VH-25H40B20

■ H type unit, phase distance 210mm

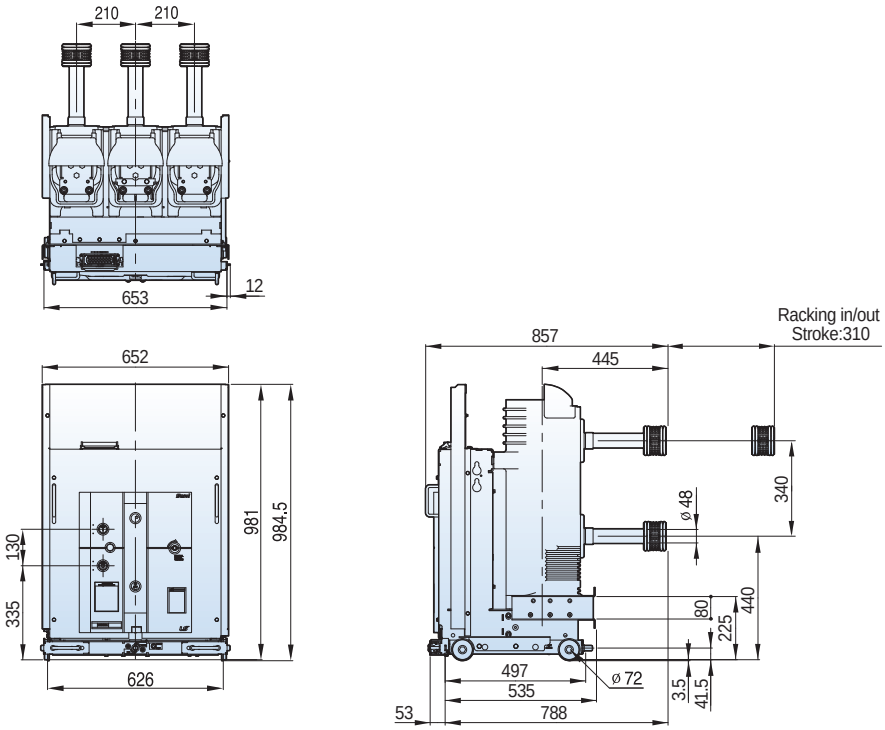

24/25.8kV, 31.5/40kA, 1250/2000A

Withdrawable

Type
VCH-20H32B13
VCH-20H32B20
VCH-20H40B13
VCH-20H40B20
VCH-25H32B13
VCH-25H32B20
VCH-25H40B13
VCH-25H40B20

■ H cradle, phase distance 210mm

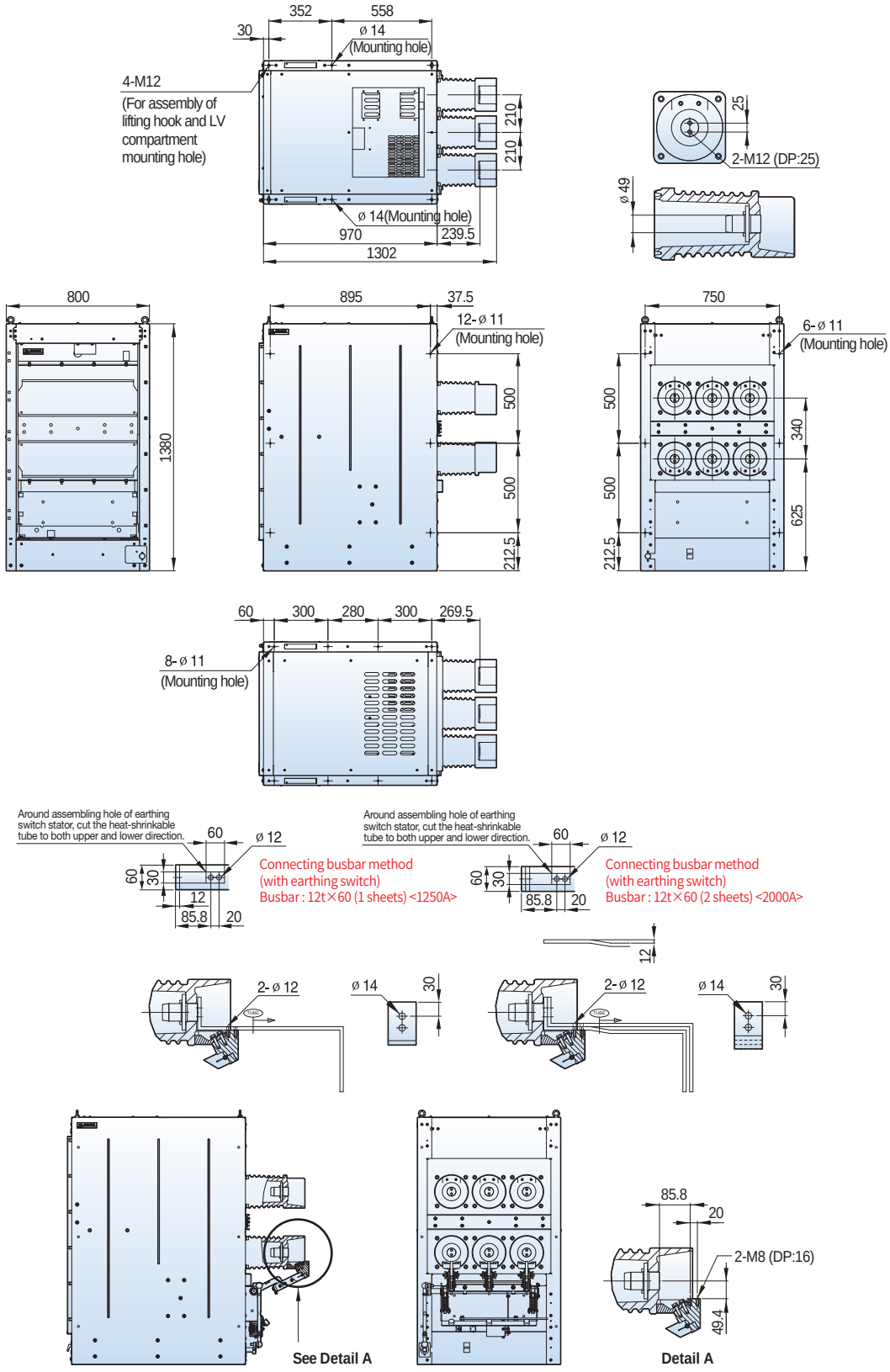

Dimensions - VH type (VH-20/25)

24/25.8kV, 31.5/40kA, 1250/2000A

Withdrawable

■ H cradle, Rotated bushing type, phase distance 210mm

Type
VCH-20H32J13
VCH-20H32J20
VCH-20H40J13
VCH-20H40J20
VCH-25H32J13
VCH-25H32J20
VCH-25H40J13
VCH-25H40J20

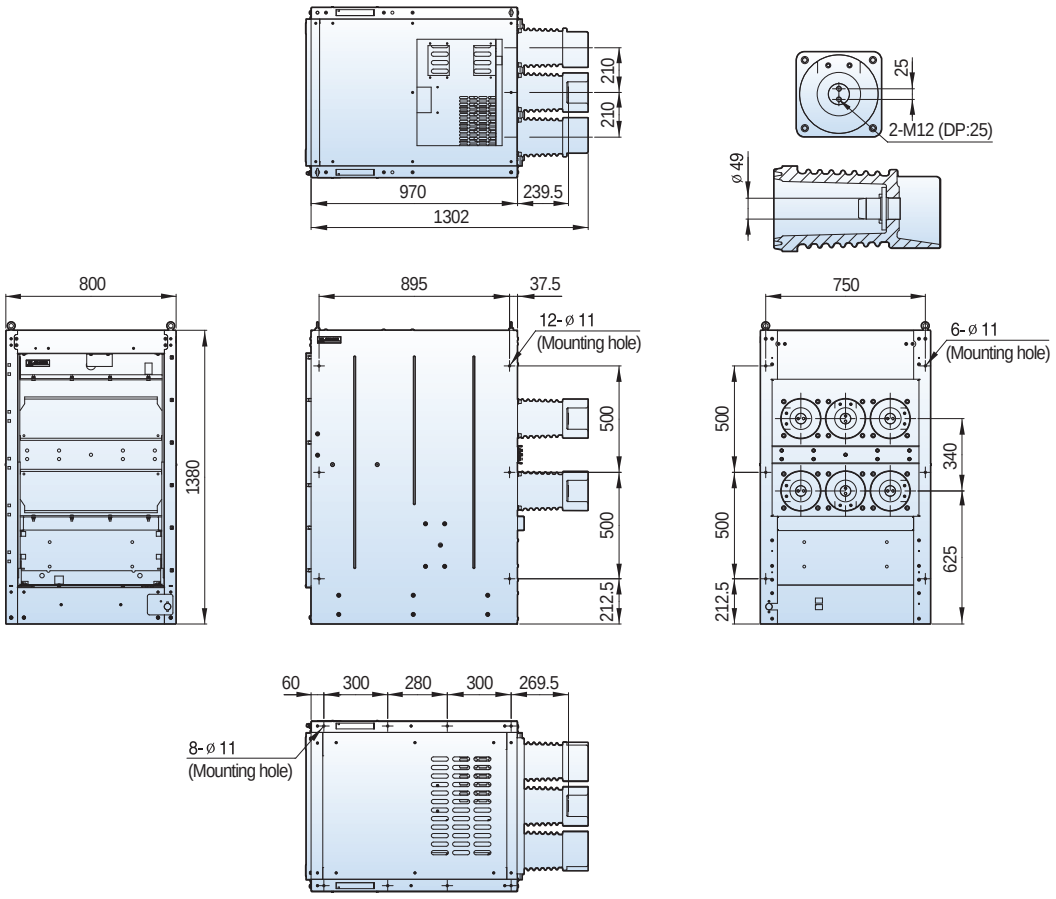

24/25.8kV, 31.5/40kA, 1250/2000A

Fixed

Type
VH-20P32D13
VH-20P32D20
VH-20P40D13
VH-20P40D20
VH-25P32D13
VH-25P32D20
VH-25P40D13
VH-25P40D20

■ P type, phase distance 275mm

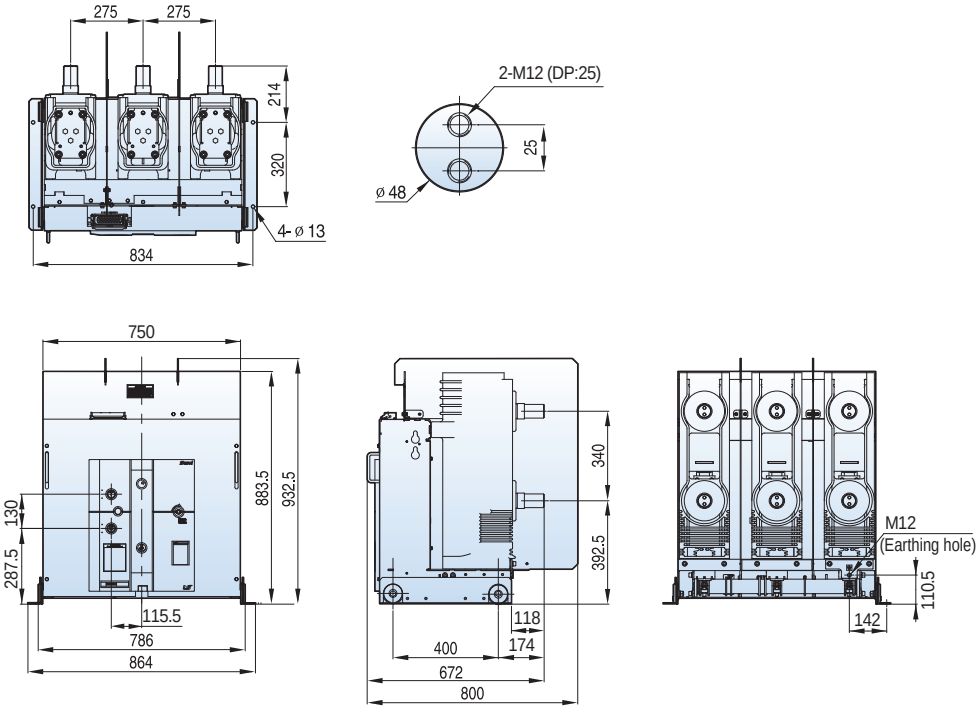

Withdrawable

Type
VH-20H32D13
VH-20H32D20
VH-20H40D13
VH-20H40D20
VH-25H32D13
VH-25H32D20
VH-25H40D13
VH-25H40D20

■ H type unit, phase distance 275mm

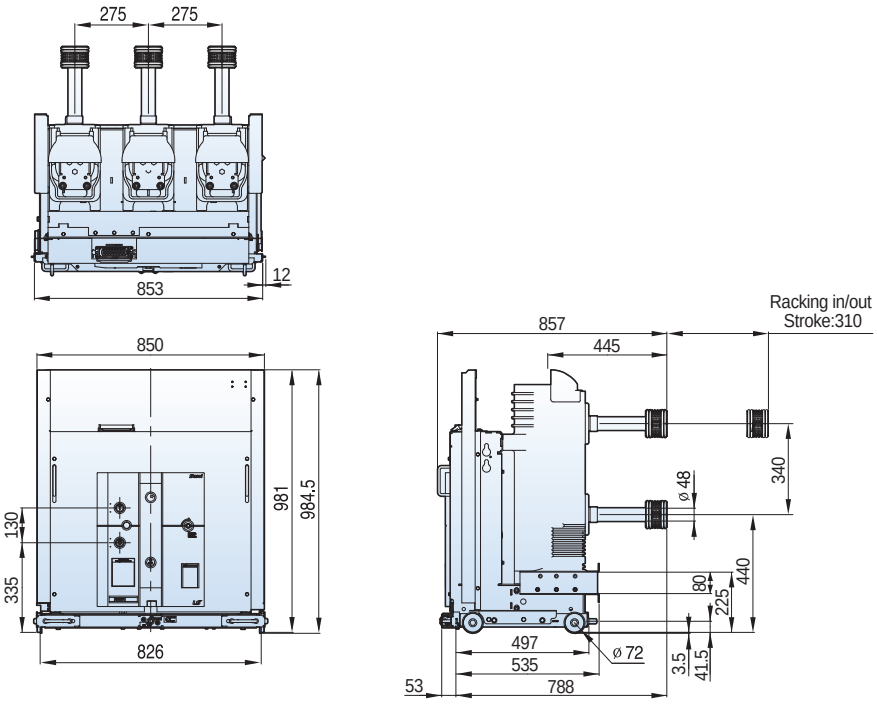

Dimensions - VH type (VH-20/25/36)

24/25.8kV, 31.5/40kA, 1250/2000A

Withdrawable

Type
VCH-20H32D13
VCH-20H32D20
VCH-20H40D13
VCH-20H40D20
VCH-25H32D13
VCH-25H32D20
VCH-25H40D13
VCH-25H40D20

■ H cradle, phase distance 275mm

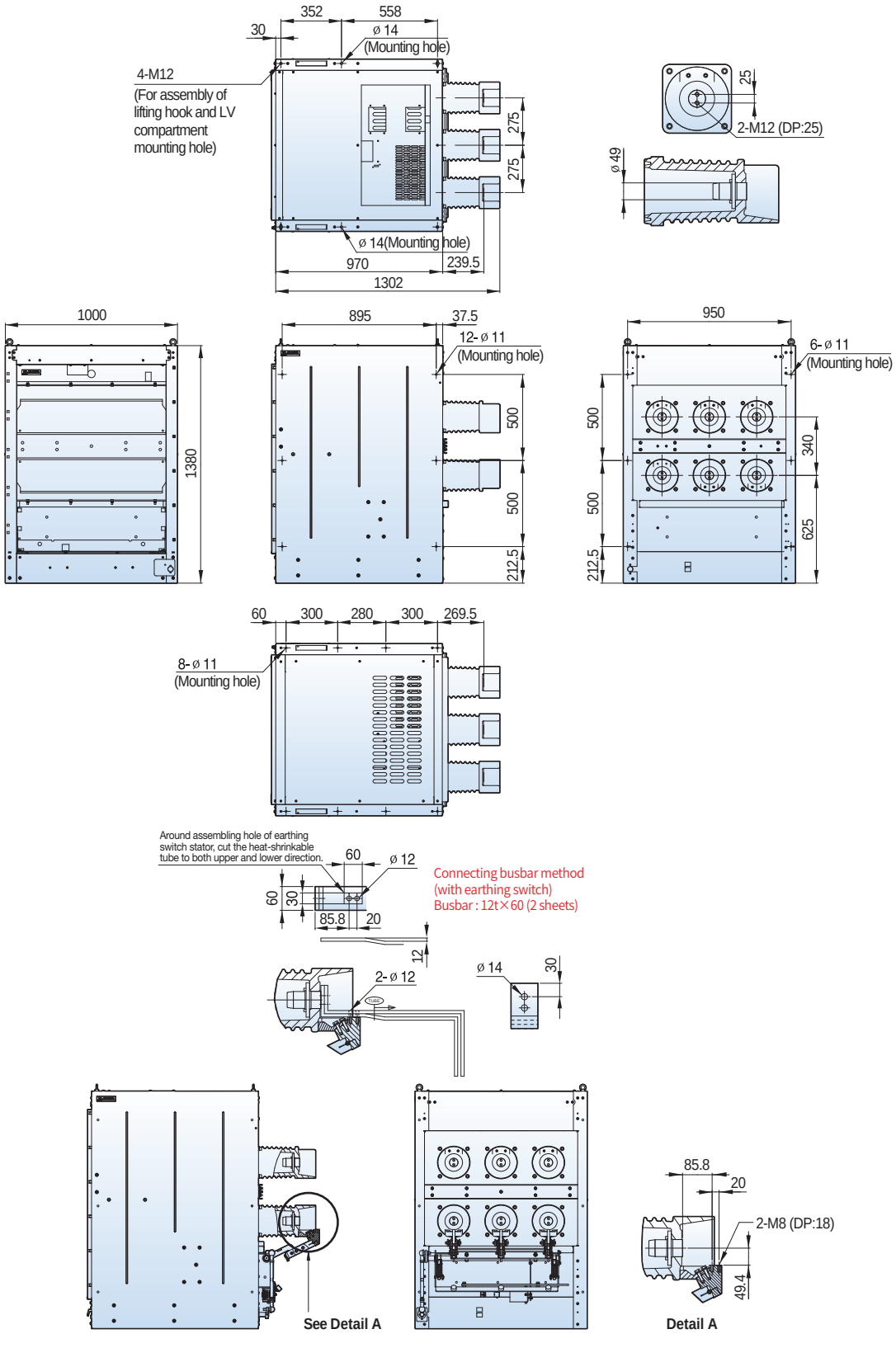

24/25.8kV, 31.5/40kA, 3150A

Fixed

Type
VH-20P32D32
VH-20P40D32
VH-25P32D32
VH-25P40D32

P type, phase distance 275mm

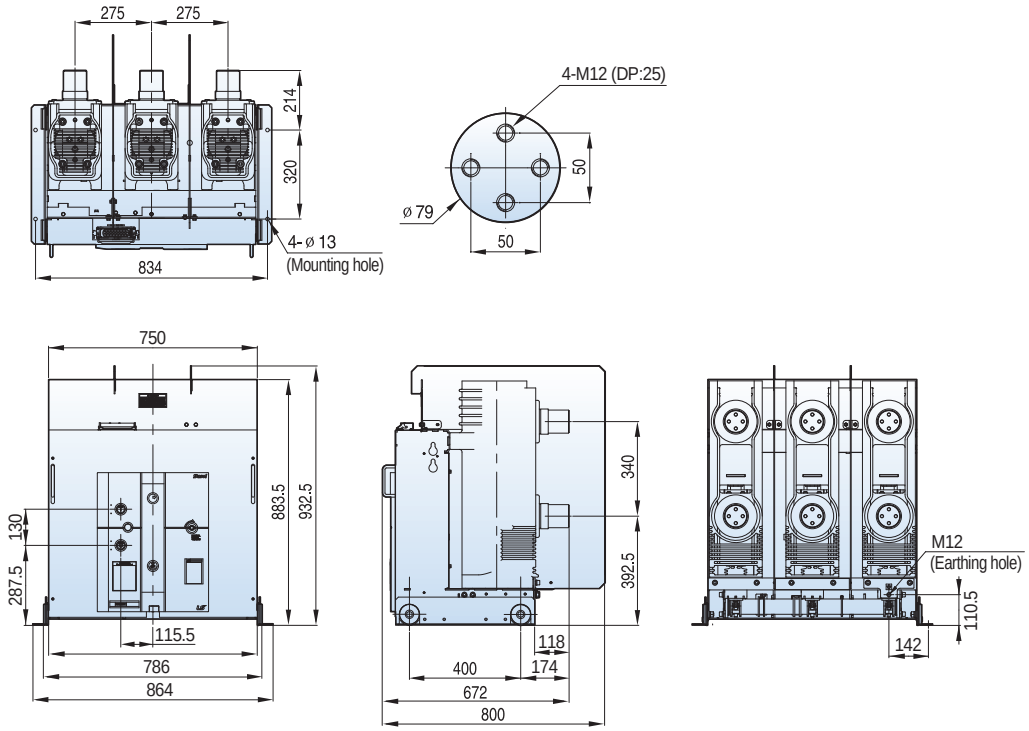

Withdrawable

Type
VH-20H32D32
VH-20H40D32
VH-25H32D32
VH-25H40D32

H type unit, phase distance 275mm

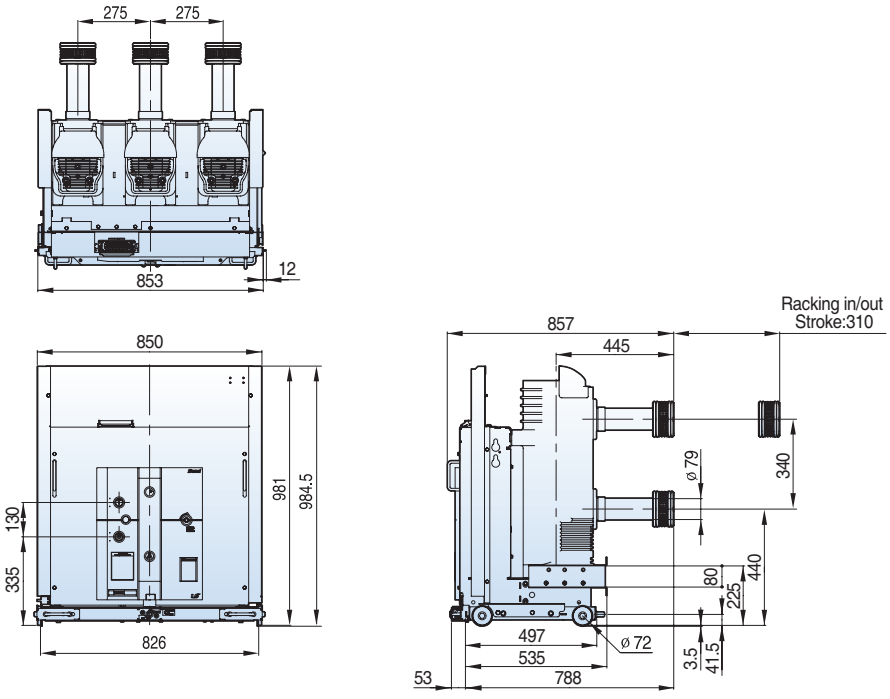

Dimensions - VH type (VH-36)

24/25.8kV, 31.5/40kA, 3150A

Withdrawable

Type
VCH-20H32D32
VCH-20H40D32
VCH-25H32D32
VCH-25H40D32

■ H cradle, phase distance 275mm

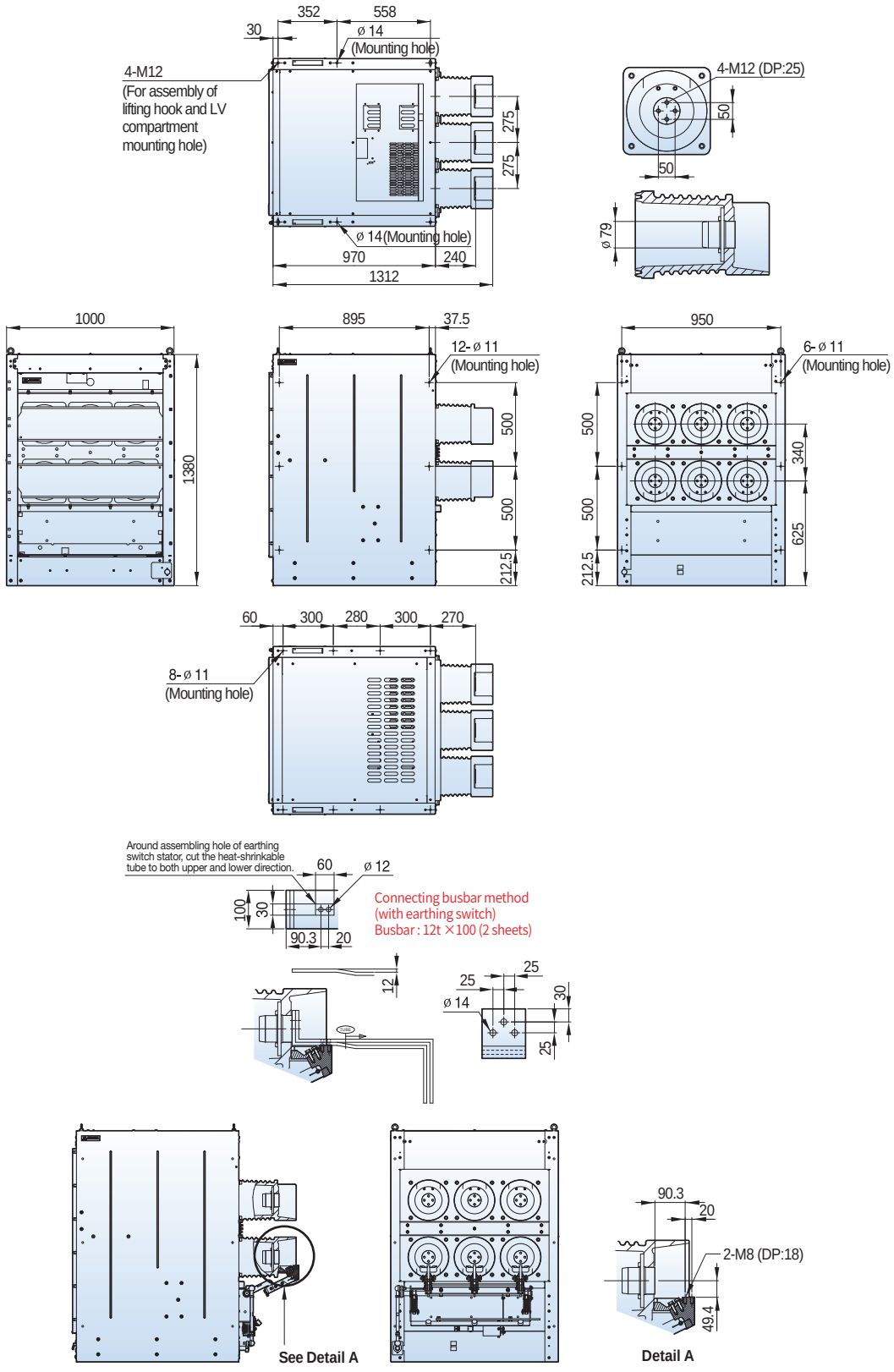

36kV, 25/31.5/40kA, 1250/2000A

Fixed

Type
VH-36P25E13
VH-36P25E20
VH-36P32E13
VH-36P32E20
VH-36P40E13
VH-36P40E20

P type, phase distance 300mm

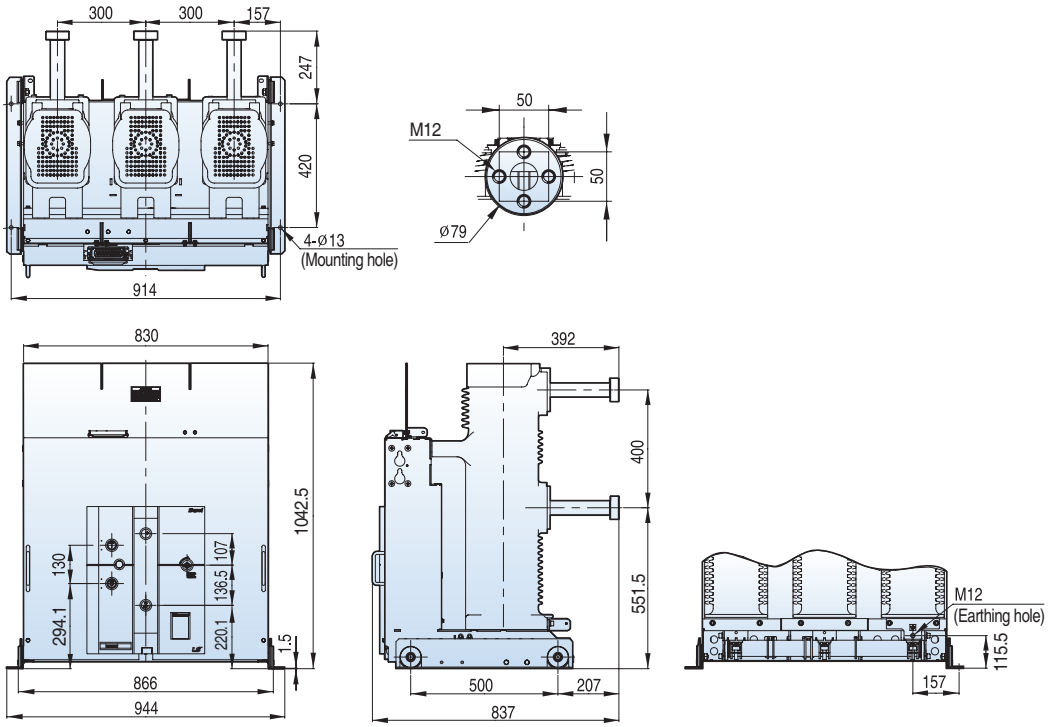

Withdrawable

Type
VH-36H25E13
VH-36H25E20
VH-36H32E13
VH-36H32E20
VH-36H40E13
VH-36H40E20

H type unit, phase distance 300mm

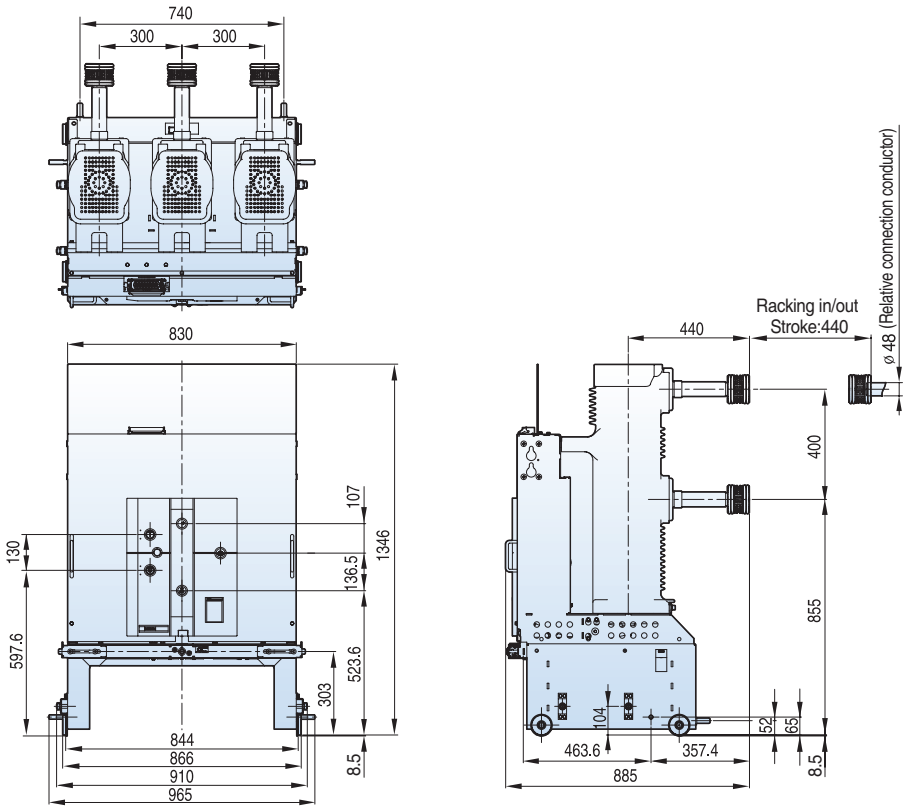

Dimensions - VH type (VH-36)

36kV, 25/31.5/40kA, 1250/2000A

Withdrawable

■ H type cradle, phase distance 300mm

Type
VCH-36H25E13
VCH-36H25E20
VCH-36H32E13
VCH-36H32E20
VCH-36H40E13
VCH-36H40E20

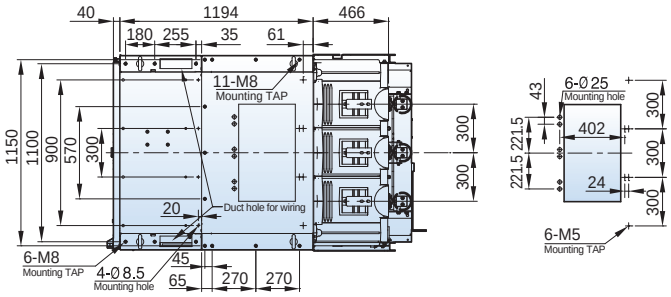

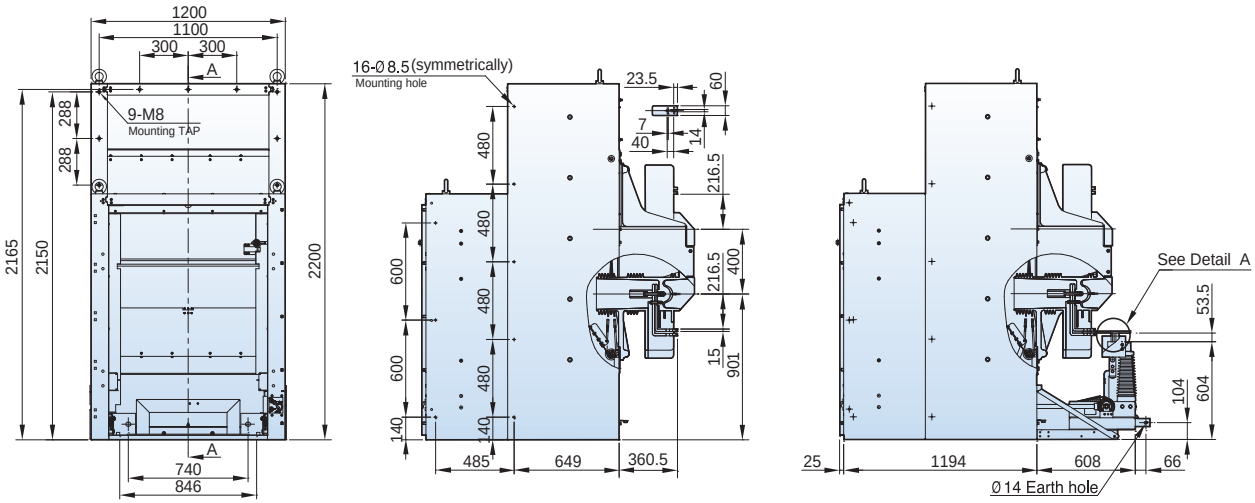

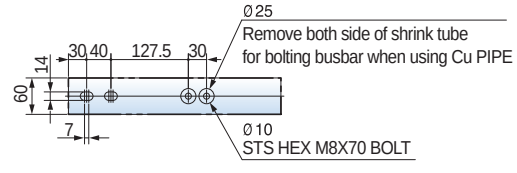

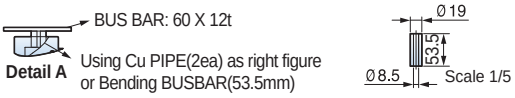

<For connecting BUSBAR>

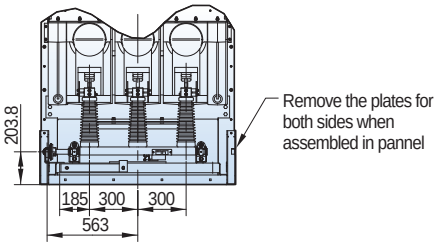

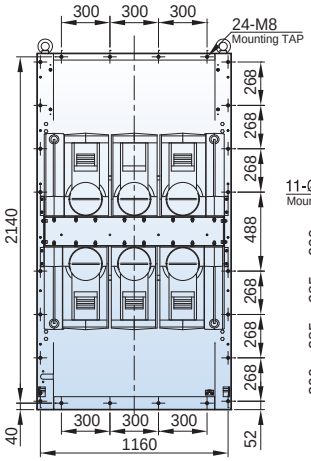

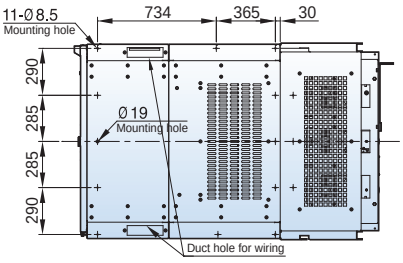

36kV, 25/31.5/40kA, 3150A

Fixed

Type
VH-36P25E32
VH-36P32E32
VH-36P40E32

P type, phase distance 300mm

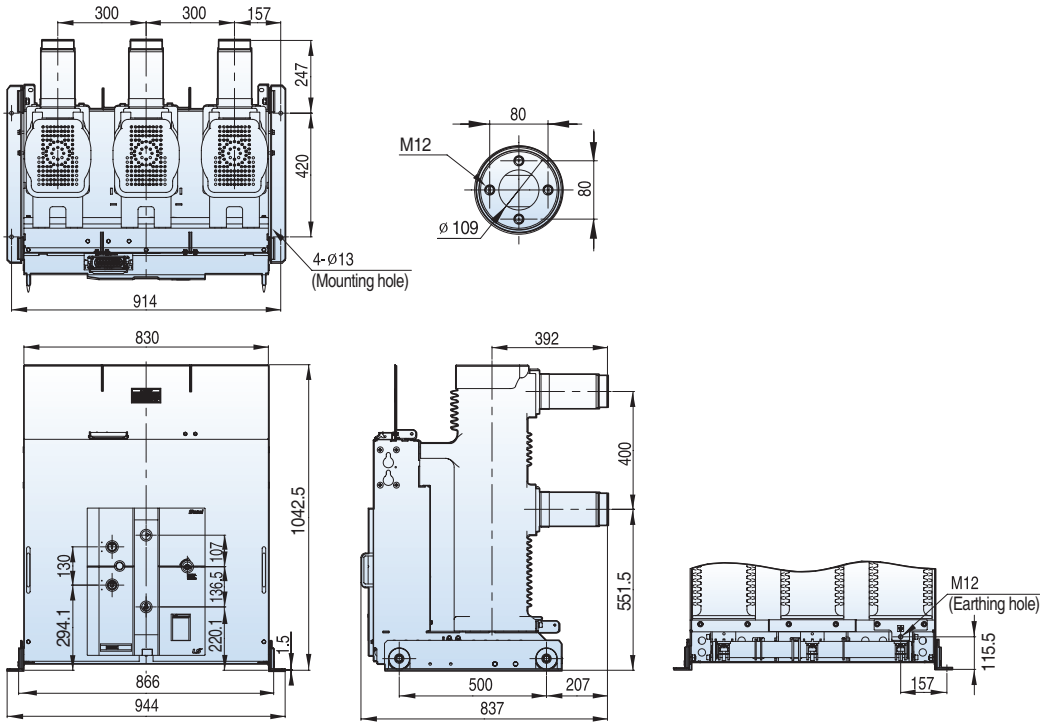

Withdrawable

Type
VH-36H25E32
VH-36H32E32
VH-36H40E32

H type unit, phase distance 300mm

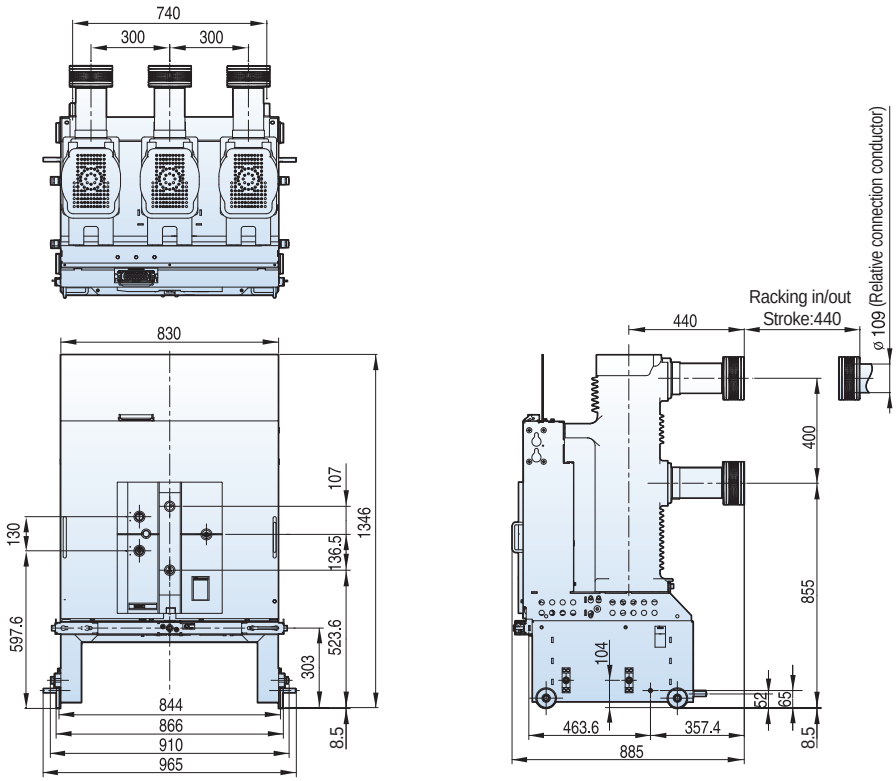

Dimensions - VH type (VH-36)

36kV, 25/31.5/40kA, 3150A

Withdrawable

■ H type cradle, phase distance 300mm

Type
VCH-36H25E32
VCH-36H32E32
VCH-36H40E32

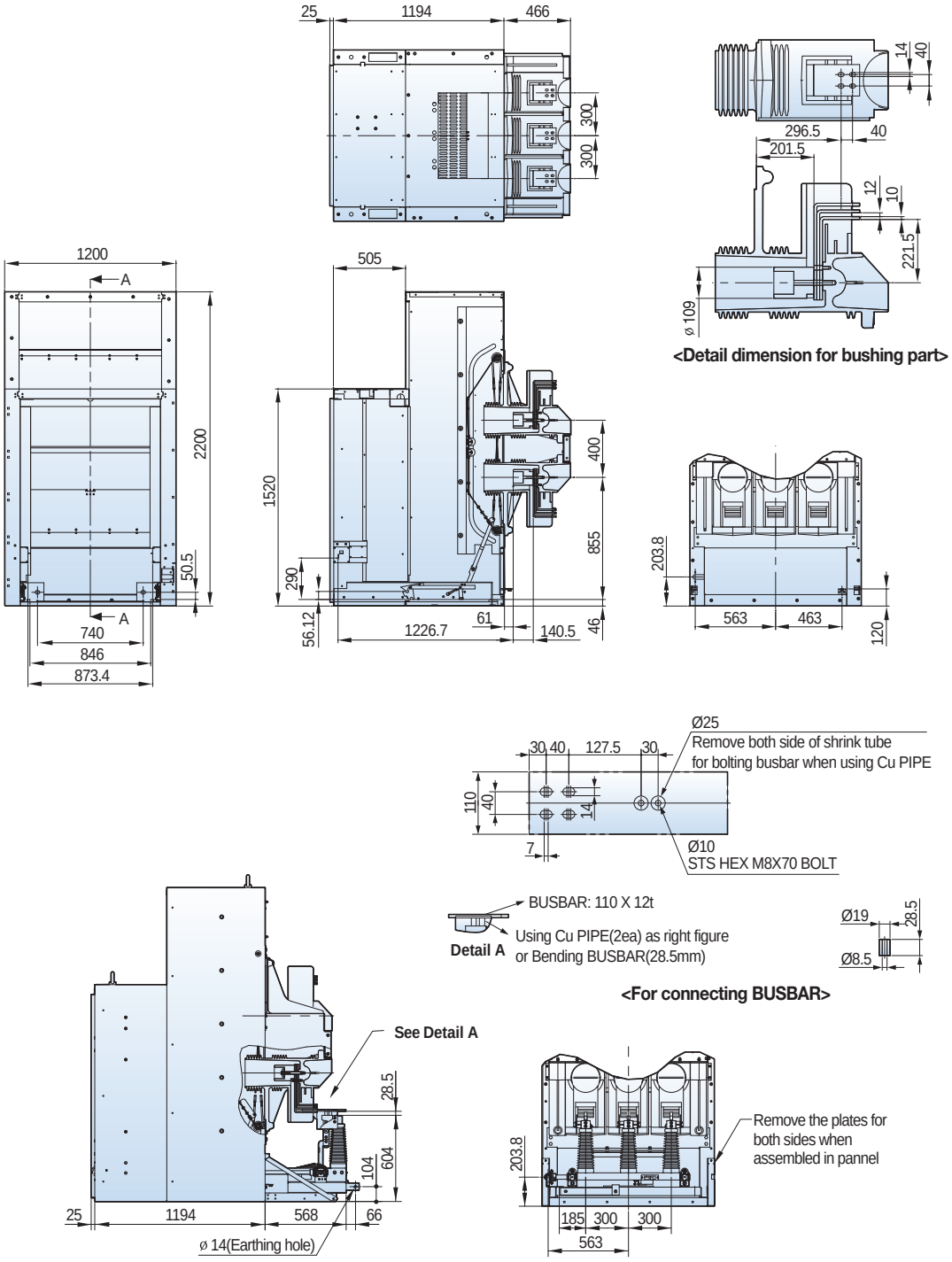

* Mounting information is same as 36kV 25/31.5/40kA 1250/2000A

Electrical endurance by interrupting current

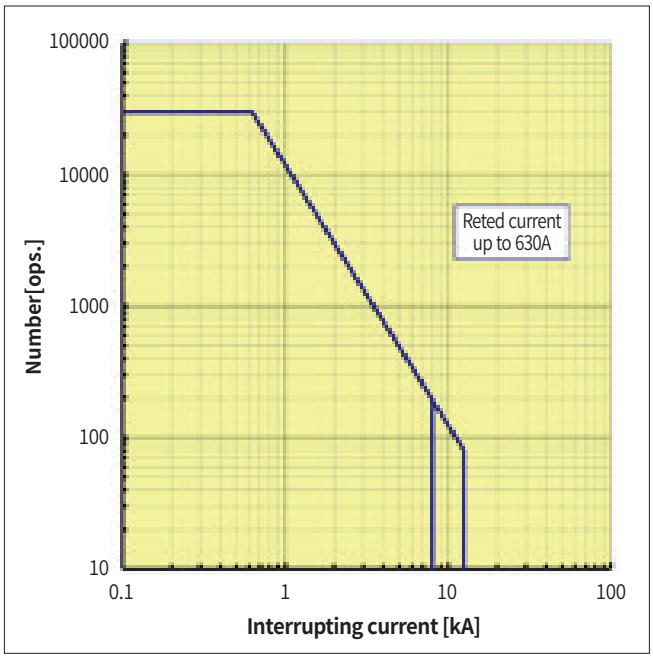

7.2kV 8/12.5kA 400/630A (LV2)

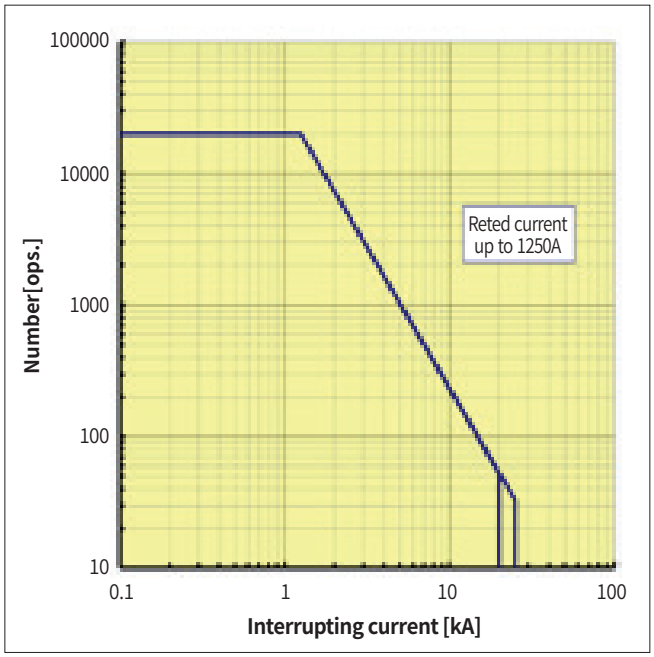

7.2kV 20/25kA 630/1250A (LV3)

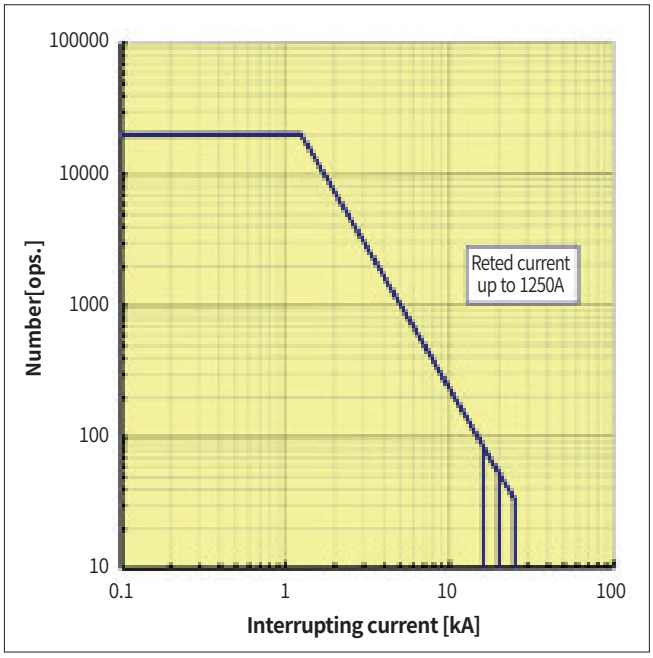

12/17.5kV 20/25kA 630/1250A (LV5-P)

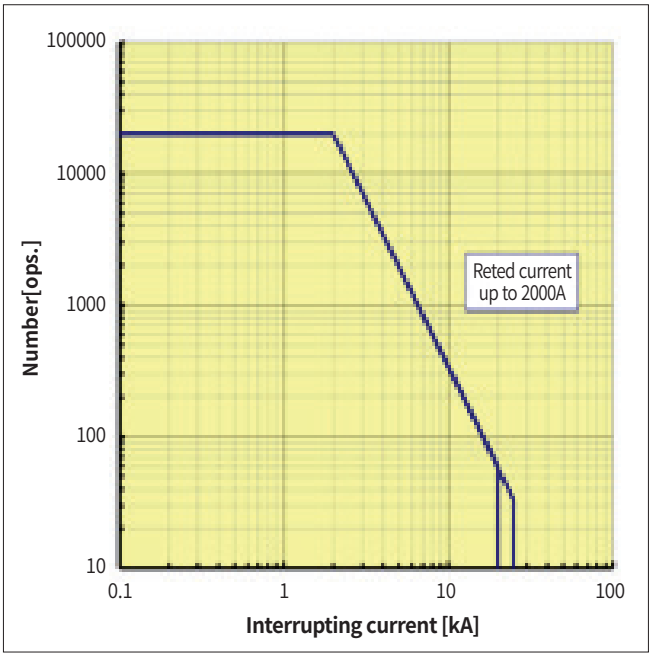

7.2/12/17.5kV 20/25kA 2000A (LV5A)

- N : Operation numbers
- I : Interrupting current

Electrical endurance by interrupting current

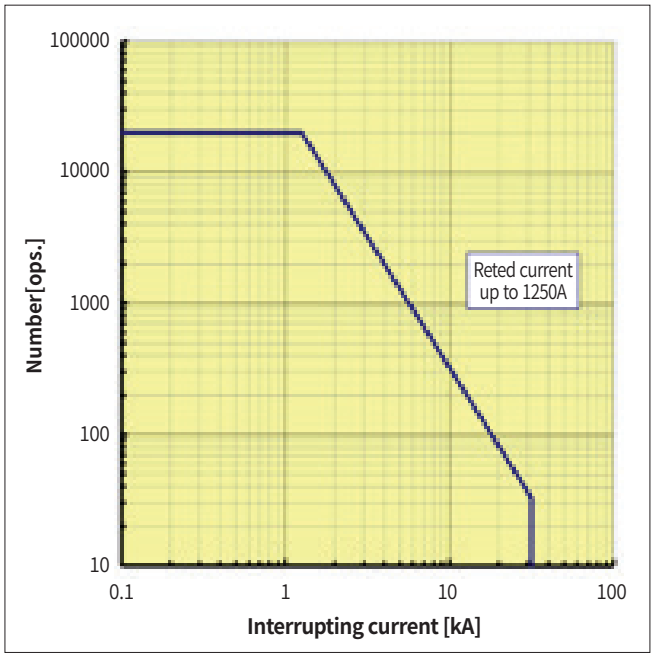

7.2/12/17.5kV 31.5kA 630/1250A (LV6)

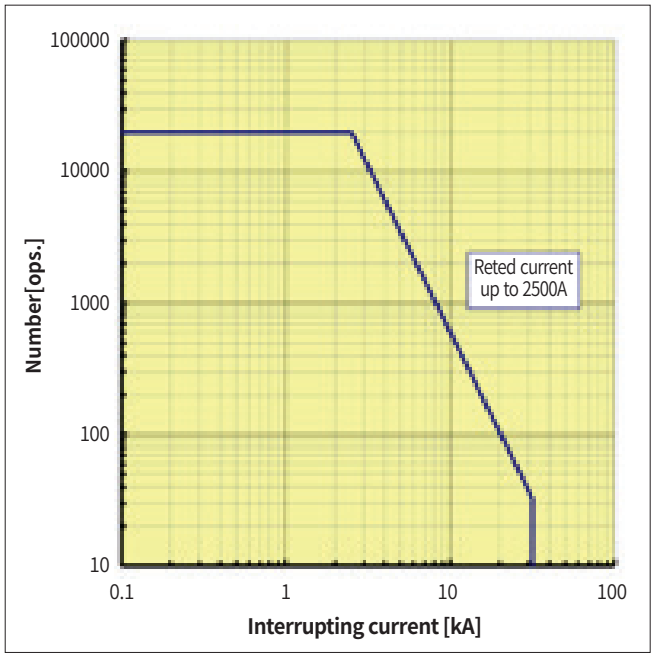

7.2/12/17.5kV 31.5kA 2000/2500A (LV6A)

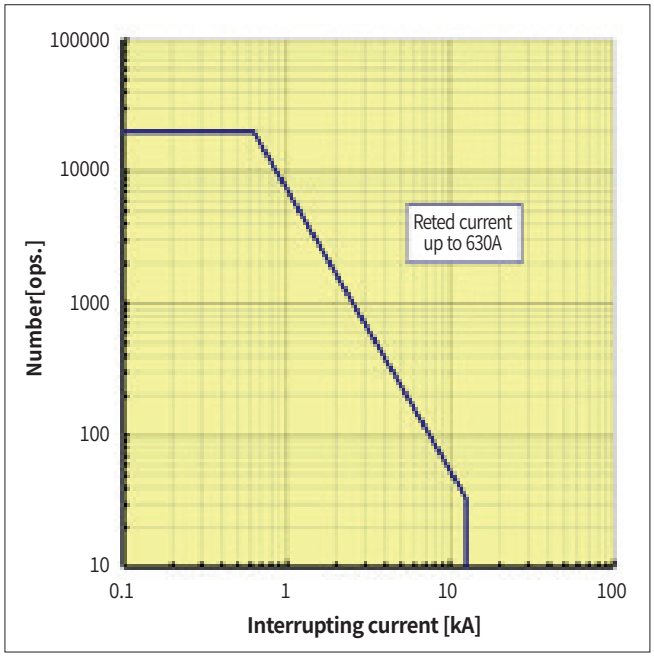

24/25.8kV 12.5kA 630A (LV4A-P1)

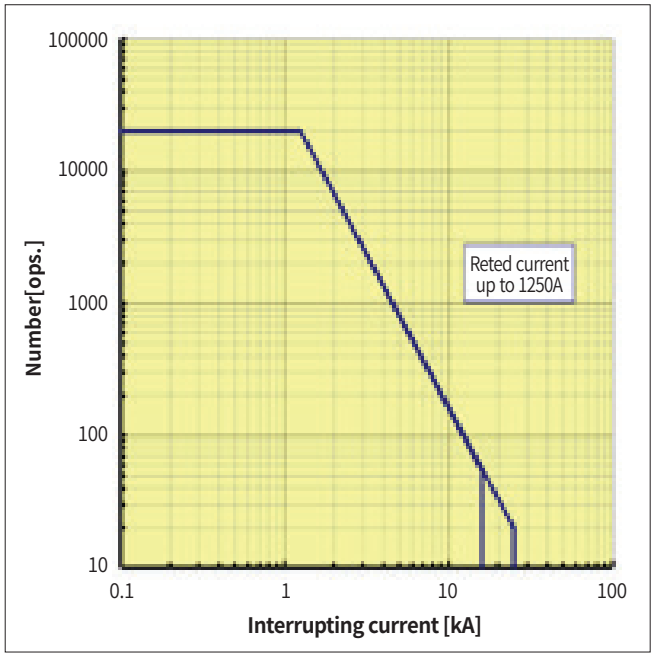

24/25.8kV 12.5kA 1250A
24/25.8kV 16/25kA 630/1250A (LV5-P1)

Note) 1. Above graphs represent the characteristics of the electrical life of LS Susol VCB.
2. Life characteristics of each model in each rating represents the LOG-LOG graphs.

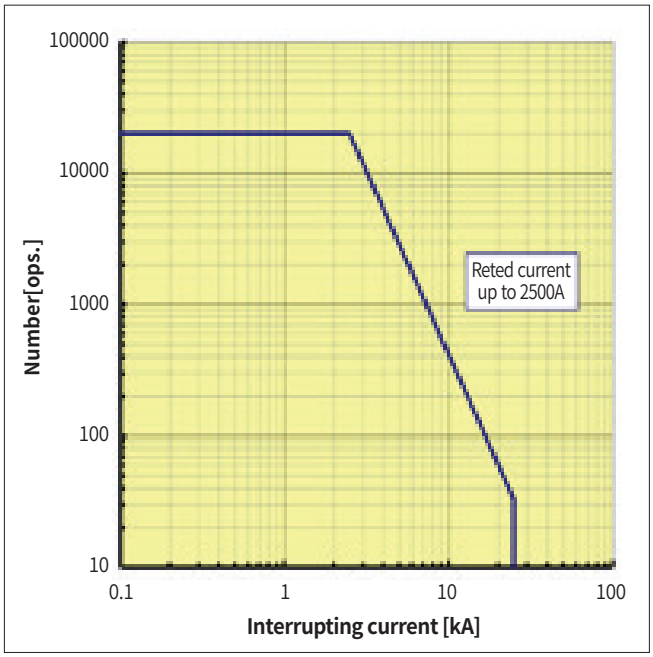

24/25.8kV 25kA 2000/2500A (LV5A-P1)

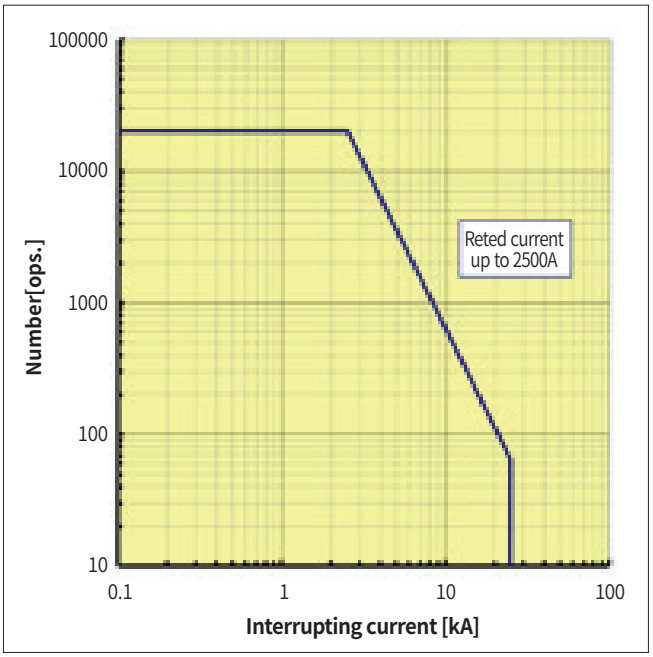

36kV 25kA 630/1250/2000/2500A (LV11-P)

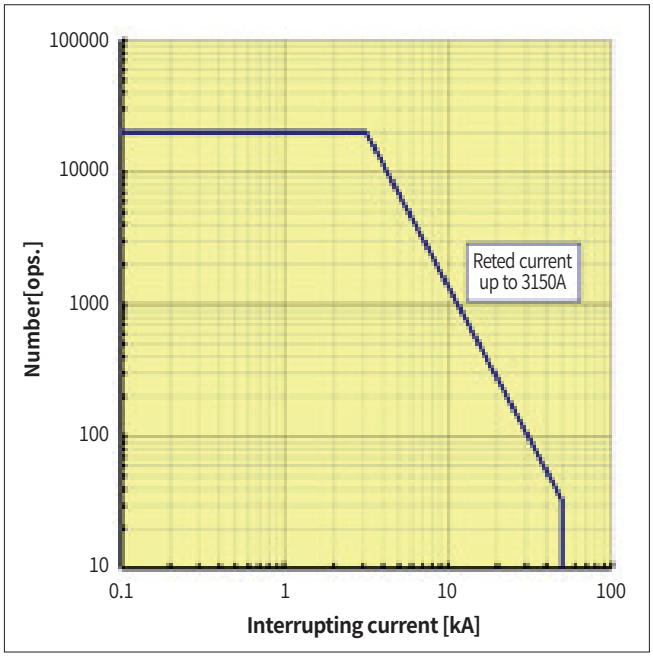

7.2/12/17.5kV 50kA 1250/2000/2500/3150A(LV8)

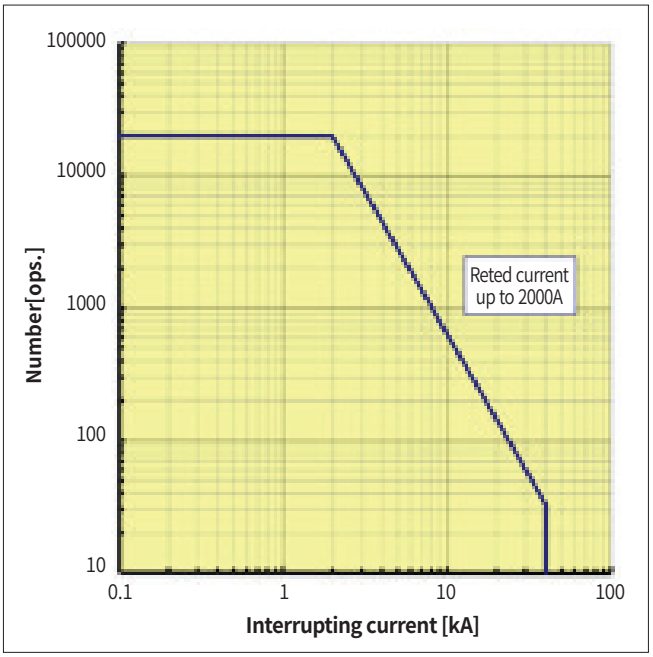

7.2/12kV 40kA 1250/2000A(LV10)

• N : Operation numbers
• I : Interrupting current

Electrical endurance by interrupting current

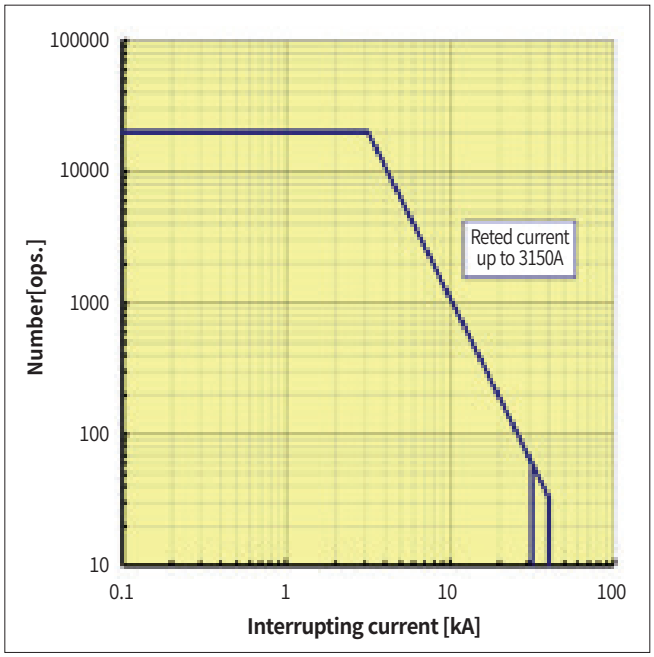

17.5kV 31.5/40kA 1250/2000A
7.2/12/17.5kV 31.5/40kA 3150A (LV8A)

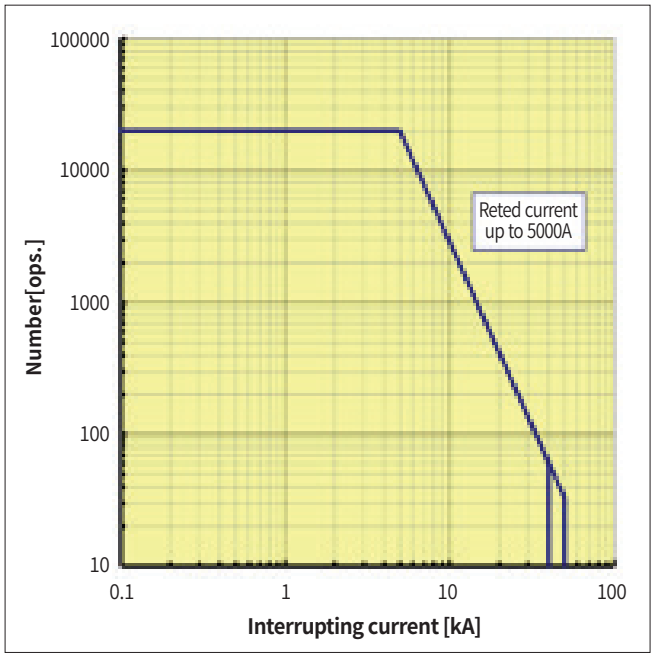

7.2/12/17.5kV 40/50kA 4000/5000A (LV10505)

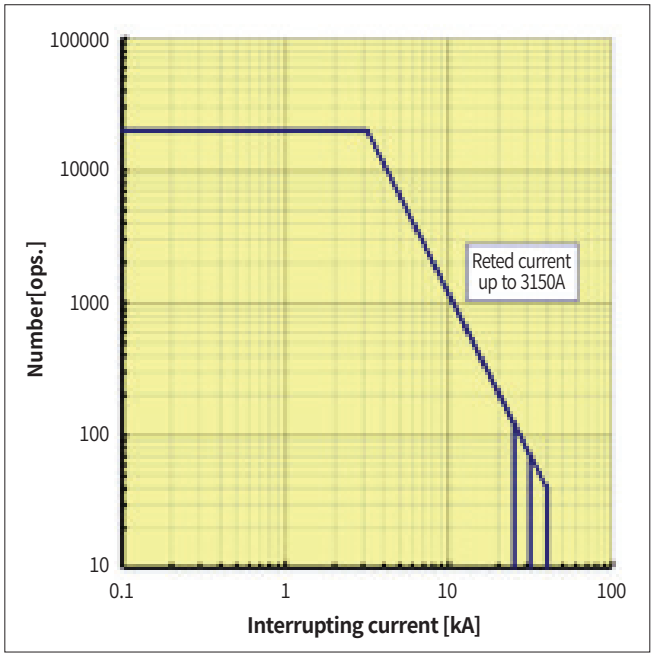

24/25.8kV 25/31.5/40kA 1250/2000/2500/3150A(LV7-P1)

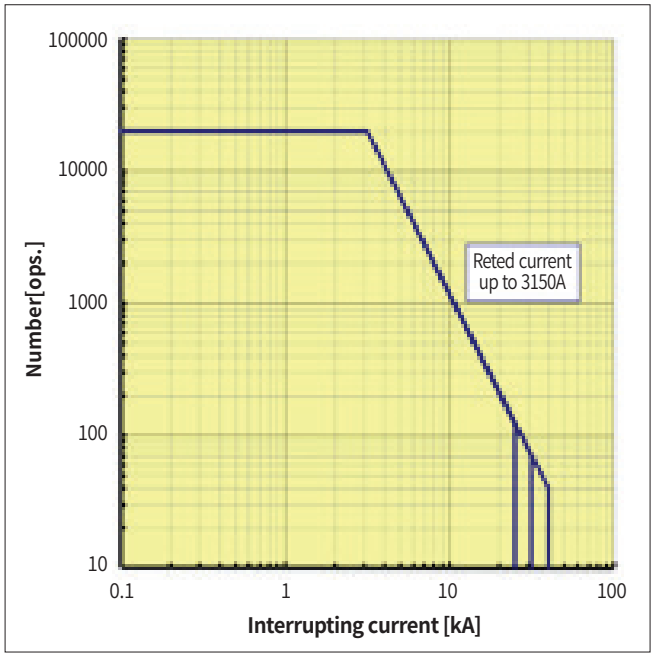

36kV 25/31.5/40kA 1250/2000/3150A (LV8-P)

Note) 1. Above graphs represent the characteristics of the electrical life of LS Susol VCB.
2. Life characteristics of each model in each rating represents the LOG-LOG graphs.

Standard Use Environment for Susol VCB

The operation characteristic of Vacuum Circuit Breaker such as insulation and endurance is often influenced largely by external environment and thus should be applied appropriately with conditions of the place where it is used taken into consideration.

The following values are the limits have been set in accordance with IEC 62271-100 (IEC 62271-1)

Ambient Temperature

- maximum temperature: +40°C
- 24-hour average maximum temperature: +35°C
- minimum temperature: -5°C

Altitude

- 1000m or less above sea level

Relative Humidity

- 24 hours average value: 95% or less
- One month average: 90% or less



- If a standard circuit breaker is used in high temperature exceeding 40°C, you are advised to use it according to the current corrected for each level of ambient temperature in catalog.
- If used in conditions of high humidity, the dielectric strength or electric performance may be degraded.



- It is highly recommended to use a dust cover or anti-humid agent if it is used in dusty and humid conditions.
- Excessive vibration may cause a trip breaker such as connection fault or flaw on mechanical parts.



- If it is left ON or OFF for a long time, it is recommended to switch load current on a regular basis.
- It is recommend to put it in the sealed protection if corrosive gas is prevalent.

Special Use Environment

The circuit breaker is designed for use in standard use environment specified in Section 2.1 of IEC62271-1.
Concerning the special use environments as below the special use conditions are required to be considered, thus please contact us in advance.

- where altitude and ambient temperature are out of standard use environment.(-40°C)
- where a strong sea breeze blows
- when usually used in a humid place
- where a lot of steam or oil steam exists
- where explosive, flammable and other harmful gases might permeate the breaker
- In a dusty place
- where abnormal vibration or shock exists
- where a lot of ice and snow exist
- other special conditions

Withstand voltage compensation according to altitude

If the breaker is used in areas of sea level higher than 1000m the degradation of insulation performance should be taken into consideration.

Ud [kV/1min]	Ur[kV]	Up [kV/1.2 × 50㎲]
70	36	170
50(65)	24	125
38	17.5	95
28(42)	12	75(82)
20	7.2	60
Power Frequency Withstand Voltage		Impulse Withstand Voltage

<Table 1> Criteria of withstand voltages by rated voltages specified in IEC62271-1

Withstand voltage compensation according to altitude

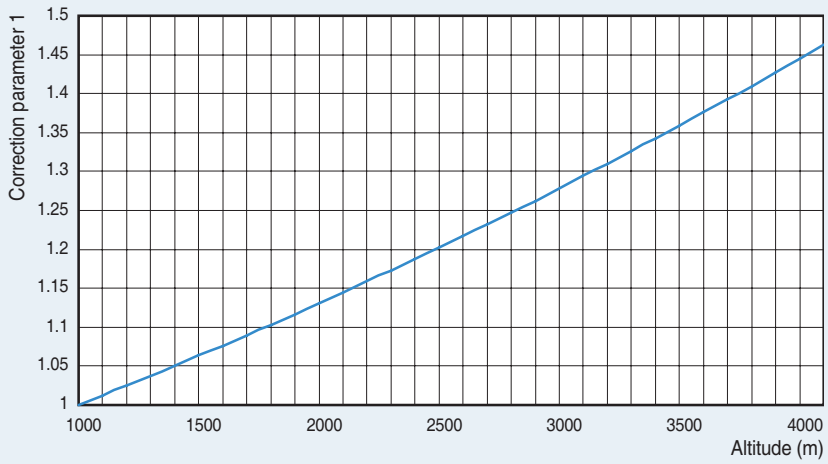

<Fig.1 > withstand voltage correction parameter 1 by altitude (based on a required withstand voltage)

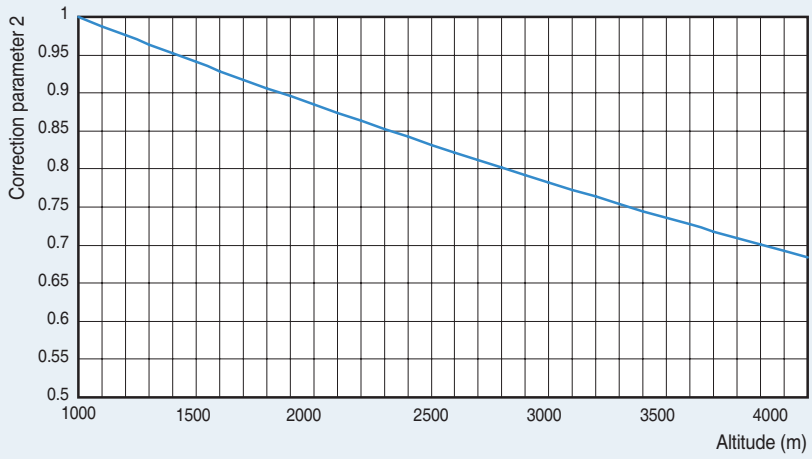

<Fig.2 > withstand voltage correction parameter 2 by altitude (based on a applicable withstand voltage)

Ex) Selecting a breaker to be used in a place of 2500m above sea level with a rated voltage 7.2kV (correction parameter 1 applied)

- Correction parameter at 2500m is 1.2
- Criteria of withstand voltage by rated voltage:
  Power Frequency Withstand Voltage (Ud) = 20kV, Impulse Withstand Voltage (Up) = 60kV
- Requirements withstand voltage criteria:
  Power Frequency Withstand Voltage (Ud) = 20×1.2 = 24kV, Impulse Withstand Voltage (Up) = 72kV
  Therefore rated voltage 12kV breaker shall apply to satisfy the required withstand voltage.

Ex) To apply a breaker with a rated voltage 12kV to the place of 2,500m above sea level (correction parameter 2 applied)

- Correction parameter at 2500m is 0.825
- Dielectric strength of VCB : Power Frequency Withstand Voltage (Ud) = 28×0.825 = 23.1kV,
  Impulse Withstand Voltage (Up) = 75×0.825 = 62kV/1.2×50 μs
  Therefore above breaker with rated voltage 12kV shall apply to rated voltage system 7.2kV at the altitude.

Special Use Environment

Rated current compensation in accordance with ambient temperature

When normal ambient temperature exceeds the temperature specified in the environment the following formula help to select the applicable current.

$$Ia = Ir\left((\Theta max - \Theta a)/\Theta r \right)^{1/2}$$

Ia: allowable continuous current in the actual ambient temperature Θ_a
Ir: rated current at 40°C ambient temperature
Θ_{max}: acceptable overall temperature of the hottest spot
Θ_a: the actual ambient temperature expected at -30°C and 60°C
Θ_r: allowable temperature in the hottest place at rated current

Ex) The calculation of the applicable load current value when a breaker with rated current 2000A is used at 55 °C ambient temperature
$Ia = 2000 \times ((105-55)/65)^{1/2} = 2000 \times 0.87 = 1754A$

Rated current (A	Ambient temperature (°C)								
	20	25	30	35	40	45	50	55	60
4000	4000	4000	4000	4000	4000	3843	3679	3508	3328
3150	3150	3150	3150	3150	3150	3026	2898	2763	2621
2000	2000	2000	2000	2000	2000	1922	1840	1754	1664
1250	1250	1250	1250	1250	1250	1201	1150	1096	1040
630	630	630	630	630	630	605	580	553	524

<Table 2> Allowable load current by ambient temperature

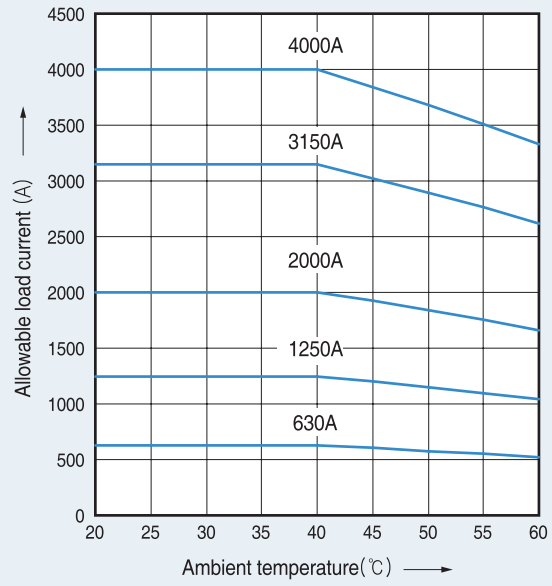

<Figure 3> Allowable load current by ambient temperature

Comparison of GCB & VCB

In the system of medium voltage lines VCB uses a vacuum which is an eco friendly medium for arc extinguishing. It also offers excellent interrupting properties and ease of maintenance and has expanded the area to the scope of the GCB as the overlap increases.

Items	GCB	VCB	Comparison results	Remarks
Images	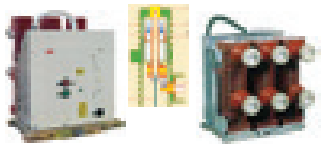	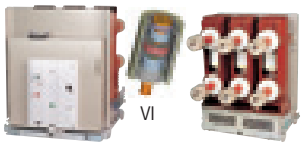 VI		
Arc extinguish medium and characteristics	SF6 gas - Greenhouse gas that causes global warming. - The toxic gas generated by chemical reactions due to arc energy. - 5kgf/㎟ high pressure required.	Vacuum - Green clean medium. - 5×10^{-5} Torr vacuum rate to maintain.	VCB is better than GCB	
Maintenance of the arc media	- Periodic check and supplement the gas pressure required. - Automatic locking if gas pressure In the event of an accident while the gas valve is locked trip is disable and the load equipment can not be protected.	- Available until the product life. - Always keep trip-first feature. When an accident occurs the trip-first feature functions to protect the equipment.	VCB is better than GCB	
Rated voltage range (kV)	3.6~550	3.6~36	GCB is better than VCB	VCB has been increasing rapidly in the medium voltage systems.
Applicable rate of transient recovery voltage (RRRV)	Low	High	VCB is better than GCB	IEC62271-100 Annex M applied/ Interrupting performance verified.
Development and trends	Decline - Company M discontinued producing GCB. - Company A manufactures VCB in medium voltage GCB production factory. - GCB Maker S started the production of VCB.	Increasing - Companies A and S have developed new VCBs. - Development trend that the voltage coverage of VCB expands. - VI increased coverage. (GIS, DAIS, SIS, etc.)	VCB is better than GCB	



Accessories Item Code

Mounting Position	Type	Accessory	Page
 Breaker	CTD	Condenser trip device [CTD]	264
	UDC	UVT Time delay	264
	CTU	Coil Test Unit	264
	AL	Temperature Sensor	264
	TM	Temperature sensor and monitoring unit	264
	-	Lead wire	265
	-	Handle	272

Accessories Item Code

Condenser trip device [CTD]



Accessories		형명	Item Code	
Susol VCB	VL VH	CTD	76113143001	CTD, AC100/110V, CB-T1
			76113143002	CTD, AC200/220V, CB-T2

UVT Time delay [UDC]

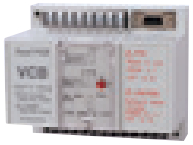

Accessories		Type	Item Code	
Susol VCB	VL VH	UDC	52773171281	DEVICE ASS''Y, DC48~60V, AC48V, UVT DELAY, VCB
			52773171282	DEVICE ASS''Y, ADC100~130V, UVT DELAY, VCB
			52773171283	DEVICE ASS''Y, ADC200~250V, UVT DELAY, VCB

Coil Test Unit [CTU]



Accessories		Type	Item Code	
Susol VCB	VL, VH	CTU	73873171221	CONTROLLER ASS'Y, CTU, VL

Temperature Sensor [AL]

Accessories		Type	Item Code	
Susol VCB	VL, VH	AL	76613172001	CABLE ASS'Y, THERMISTOR, MCSG, VM/VH

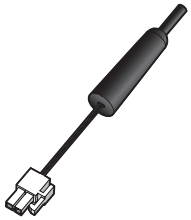

Temperature sensor and monitoring unit [TM]

Accessories		Type	Item Code	
Susol VCB	VL, VH	TM	72313172530	TOTAL ASS'Y, TRIOU, TM, (VCB), VH

Lead wire



A type connector



Q type connector



User Plug

VCB Type	Detailed breaker type	Wiring type	Auxiliary contact connecto	Flammability rating	Color	SA *2)	
						Standard wiring	Option wiring *1) (A1, A2, A3, A4, A5)
VL-Type	VL-06□08□04 VL-06□13□06	Lead Wire	SA1	HB	yellow	70723171101	70723171102
					blue	70723171107	70723171108
				XHHW	yellow	70723171113	70723171114
					blue	70723171120	70723171121
			SA2	HB	yellow	70723171105	70723171106
					blue	70723171111	70723171112
				XHHW	yellow	70723171117	70723171118
					blue	70723171122	70723171123
			SA3	HB	yellow	70723171103	70723171104
					blue	70723171109	70723171110
				XHHW	yellow	70723171115	70723171116
					blue	70723171124	70723171125
		User Plug	SA1 SA2 SA3			77023171003	

*1: If even one of the options A1, A2, A3, A4, A5 is applied to the VCB code, please order with the optional wiring code.
(ex. Wiring (HB/Yellow) code conforming to VL-06F13A06-M1C1T1SA2U0-A4: 70723171106
*2: After April 2021, the B Type connector is changed to Q Type (VL/VH: SB->SQ, LVB: 2G, 2H->2M, 2N), please order with the appropriate wiring.
(ex. Wiring (HB/Yellow) code conforming to VL-06F25A06-M1C1T1SQ2U0: 70723172503

VCB Type	Detailed breaker type	Wiring type	Auxiliary contact connecto	Flammability rating	Color	SA *2)	
						Standard wiring	Option wiring *1) (A1, A2, A3, A4, A5)
VL-Type	VL-06,12,17□20, 25,32□06,13,20,25 VL-20,25□13,16, 25□06,13,20,25 VL-36□25□06,13, 20,25	Lead Wire	SA2	HB	yellow	70723172101	70723172102
					blue	70723172112	70723172113
				XHHW	yellow	70723172116	70723172117
					blue	70723172144	70723172145
			SA4	HB	yellow	70723172103	70723172104
					blue	70723172114	70723172115
				XHHW	yellow	70723172118	70723172119
					blue	70723172146	70723172147
		User Plug	SA2			77023172101	
			SA4			77023172101	

*1: If even one of the options A1, A2, A3, A4, A5 is applied to the VCB code, please order with the optional wiring code.
(ex. Wiring (HB/Yellow) code conforming to VL-06F13A06-M1C1T1SA2U0-A4: 70723171106
*2: After April 2021, the B Type connector is changed to Q Type (VL/VH: SB->SQ, LVB: 2G, 2H->2M, 2N), please order with the appropriate wiring.
(ex. Wiring (HB/Yellow) code conforming to VL-06F25A06-M1C1T1SQ2U0: 70723172503

Accessories Item Code

Lead wire



A type connector



Q type connector



User Plug

VCB Type	Detailed breaker type	Wiring type	Auxiliary contact connecto	Flamma-bility rating	Color	SB Type		SQ Typ *2)	
						Standard wiring	Option wiring *1) (A1, A2, A3, A4, A5)	Standard wiring	Option wiring *1) (A1, A2, A3, A4, A5)
VL-Type	VL-06,12,17□20, 25,32□06,13,20,25 VL-20,25□13,16, 25□06,13,20,25 VL-36□25□06,13, 20,25	Lead Wire	SQ2 (SB2)	HB	yellow	70723172107		70723172503	
					blue	70723172149		70723172519	
				XHHW	yellow	70723172109		70723172505	
					blue	70723172150		70723172521	
			SQ4 (SB4)	HB	yellow	70723172108		70723172504	
					blue	70723172151		70723172520	
				XHHW	yellow	70723172170		70723172506	
					blue	-		70723172522	
		User Plug	SQ2 (SB2)			70723172110		70723172511	
			SQ4 (SB4)			70723172111		70723172512	
VH-Type	VH-06,12,17,20,25, 36□32,40,50□13, 20,25,32,40,50	Lead Wire	SQ2 (SB2)	HB	yellow	70723173109		70723172503	
					blue	70723173111		70723172519	
				XHHW	yellow	70723173119		70723172505	
					blue	70723173112		70723172521	
			SQ4 (SB4)	HB	yellow	70723173110		70723172504	
					blue	70723173113		70723172520	
		User Plug	SQ2 (SB2)			70723173105		70723172511	
			SQ4 (SB4)			70723173106		70723172512	

*1: If even one of the options A1, A2, A3, A4, A5 is applied to the VCB code, please order with the optional wiring code.
(ex. Wiring (HB/Yellow) code conforming to VL-06F13A06-M1C1T1SA2U0-A4: 70723171106
*2: After April 2021, the B Type connector is changed to Q Type (VL/VH: SB->SQ, LVB: 2G, 2H->2M, 2N), please order with the appropriate wiring.
(ex. Wiring (HB/Yellow) code conforming to VL-06F25A06-M1C1T1SQ2U0: 70723172503

VCB Type	Detailed breaker type	Wiring type	Auxiliary contact connecto	Flamma-bility rating	Color	SB Type		SQ Typ *2)	
						Standard wiring	Option wiring *1) (A1, A2, A3, A4, A5)	Standard wiring	Option wiring *1) (A1, A2, A3, A4, A5)
VH-Type	VH-06,12,17,20,25, 36□32,40,50□13, 20,25,32,40,50	Lead Wire	SQ2 (SB2)	HB	yellow	70723173109		70723172503	
					blue	70723173111		70723172519	
				XHHW	yellow	70723173119		70723172505	
					blue	70723173112		70723172521	
			SQ4 (SB4)	HB	yellow	70723173110		70723172504	
					blue	70723173113		70723172520	
		User Plug	SQ2 (SB2)			70723173105		70723172511	
			SQ4 (SB4)			70723173106		70723172512	

*1: If even one of the options A1, A2, A3, A4, A5 is applied to the VCB code, please order with the optional wiring code.
(ex. Wiring (HB/Yellow) code conforming to VL-06F13A06-M1C1T1SA2U0-A4: 70723171106
*2: After April 2021, the B Type connector is changed to Q Type (VL/VH: SB->SQ, LVB: 2G, 2H->2M, 2N), please order with the appropriate wiring.
(ex. Wiring (HB/Yellow) code conforming to VL-06F25A06-M1C1T1SQ2U0: 70723172503

Lead wire



A type connector



Q type connector



User Plug

VCB Type	Detailed breaker type	Wiring type	Auxiliary contact connecto	Flamma-bility rating	Color	SA or SB Type		SA or SQ Typ *2)	
						Standard wiring	Option wiring *1) (A1, A2, A3, A4, A5)	Standard wiring	Option wiring *1) (A1, A2, A3, A4, A5)
VL-Type	VH-06,12 P,E,F,G 32,40 A,B 13,20,32 LVB-06,12 P,E,F-32, 40L/12,20,30 (Pro-MEC & Susol PI)	Lead Wire	VH: SA2 LVB: 2B	HB	yellow	70723143117		70723143117	
					blue	70713143020		70713143020	
				XHHW	yellow	70713143012		70713143012	
					blue	70713143030		70713143030	
			VH: SA4 LVB: 2E	HB	yellow	70723143118		70723143118	
					blue	70713143021		70713143021	
				XHHW	yellow	70713143013		70713143013	
					blue	70713143031		70713143031	
			VH: SQ2 (SB2) LVB: 2M (2G)	HB	yellow	70713143024		70723143524	
					blue	70713143044		70723143544	
				XHHW	yellow	70713143049		70723143549	
					blue	70713143047		70723143547	
			VH: SQ4 (SB4) LVB: 2N (2H)	HB	yellow	70713143025		70723143525	
					blue	70713143045		70723143545	
				XHHW	yellow	70713143048		70723143548	
					blue	70713143046		70723143546	
		User Plug	VH: SA2 LVB: 2B			73263143007		73263143007	
			VH: SA4 LVB: 2E			73263143008		73263143008	
			VH: SQ2(SB2) LVB: 2M(2G)			73263143030		70723143651	
			VH: SQ4(SB4) LVB: 2N(2H)			73263143031		70723143652	

*1: If even one of the options A1, A2, A3, A4, A5 is applied to the VCB code, please order with the optional wiring code.
(ex. Wiring (HB/Yellow) code conforming to VL-06F13A06-M1C1T1SA2U0-A4: 70723171106

*2: After April 2021, the B Type connector is changed to Q Type (VL/VH: SB->SQ, LVB: 2G, 2H->2M, 2N), please order with the appropriate wiring.
(ex. Wiring (HB/Yellow) code conforming to VL-06F25A06-M1C1T1SQ2U0: 70723172503

Accessories Item Code

Lead wire

VCB Type	Breaker type	Code	
VL-Type	VL-06□08□04 VL-06□13□06	70723171101	LEAD WIRE ASS'Y,2A2B,VL,AMP
		70723171102	LEAD WIRE ASS'Y,2A2B,OPTION,VL,AMP
		70723171103	LEAD WIRE ASS'Y,6A6B,VL,AMP
		70723171104	LEAD WIRE ASS'Y,6A6B,OPTION,VL,AMP
		70723171105	LEAD WIRE ASS'Y,4A4B,VL,AMP
		70723171106	LEAD WIRE ASS'Y,4A4B,OPTION,VL,AMP
		70723171107	LEAD WIRE ASS'Y,2A2B,BLUE,VL,AMP
		70723171108	LEAD WIRE ASS'Y,2A2B,BLUE,OPTION,VL,AMP
		70723171109	LEAD WIRE ASS'Y,6A6B,BLUE,VL,AMP
		70723171110	LEAD WIRE ASS'Y,6A6B,BLUE,OPTION,VL,AMP
		70723171111	LEAD WIRE ASS'Y,4A4B,BLUE,VL,AMP
		70723171112	LEAD WIRE ASS'Y,4A4B,BLUE,OPTION,VL,AMP
		70723171113	LEAD WIRE ASS'Y,2A2B,XHHW,VL,AMP
		70723171114	LEAD WIRE ASS'Y,2A2B,XHHW,OPTION,VL,AMP
		70723171115	LEAD WIRE ASS'Y,6A6B,XHHW,VL,AMP
		70723171116	LEAD WIRE ASS'Y,6A6B,XHHW,OPTION,VL,AMP
		70723171117	LEAD WIRE ASS'Y,4A4B,XHHW,VL,AMP
		70723171118	LEAD WIRE ASS'Y,4A4B,XHHW,OPTION,VL,AMP
		70723171120	LEAD WIRE ASS'Y,2A2B,XHHW,BLUE,VL,AMP
		70723171121	LEAD WIRE ASS'Y,2A2B,XHHW,BLUE,OPTION,VL,AMP
		70723171122	LEAD WIRE ASS'Y,4A4B,XHHW,BLUE,VL,AMP
		70723171123	LEAD WIRE ASS'Y,4A4B,XHHW,BLUE,OPTION,VL,AMP
		70723171124	LEAD WIRE ASS'Y,6A6B,XHHW,BLUE,VL,AMP
		70723171125	LEAD WIRE ASS'Y,6A6B,XHHW,BLUE,OPTION,VL,AMP
		77023171003	CIRCUIT ASS'Y,USER JACK,AMP,VL

VCB Type	Breaker type	Code	
VL-Type	VL-06,12,17□20,25,32□06,13,20,25 VL-20,25□13,16,25□06,13,20, 25 VL-36□25□06,13,20,25	70723172101	LEAD WIRE ASS'Y,M,4a4b,AMP,VL
		70723172102	LEAD WIRE ASS'Y,M,4a4b,AMP,OPTION,VL
		70723172103	LEAD WIRE ASS'Y,M,10a10b,AMP,VL
		70723172104	LEAD WIRE ASS'Y,M,10a10b,AMP,OPTION,VL
		70723172112	LEAD WIRE ASS'Y,M,BLUE,4a4b,AMP
		70723172113	LEAD WIRE ASS'Y,M,BLUE,4a4b,AMP,OPTION,VL
		70723172114	LEAD WIRE ASS'Y,M,BLUE,10a10b,AMP,VL
		70723172115	LEAD WIRE ASS'Y,M,BLUE,10a10b,AMP,OPTION
		70723172116	LEAD WIRE ASS'Y,M,XHHW,4a4b,AMP
		70723172117	LEAD WIRE ASS'Y,M,XHHW,4a4b,AMP,OPTION
		70723172118	LEAD WIRE ASS'Y,M,XHHW,10a10b,AMP,VL
		70723172119	LEAD WIRE ASS'Y,M,XHHW,10a10b,AMP,OPTION,VL
		70723172144	LEAD WIRE ASS'Y,M,XHHW,BLUE,4a4b,AMP
		70723172145	LEAD WIRE ASS'Y,M,XHHW,BLUE,4a4b,AMP,OPTION
		70723172146	LEAD WIRE ASS'Y,M,XHHW,BLUE,10a10b,AMP,VL
		70723172147	LEAD WIRE ASS'Y,M,XHHW,BLUE,10a10b,AMP,OPTION,VL
		77023172101	CIRCUIT ASS'Y,USER JACK,M,AMP,VL

Lead wire

VCB Type	Breaker type	Code	
VL-Type	VL-06,12,17□20,25,32□06,13,20,25 VL-20,25□13,16,25□06,13,20,25 VL-36□25□06,13,20,25	70723172107	LEAD WIRE ASS'Y,PHOENIX,4a4b,MALE,VL
		70723172108	LEAD WIRE ASS'Y,PHOENIX,10a10b,MALE,VL
		70723172109	LEAD WIRE ASS'Y,PHOENIX,XHHW,4a4b,MALE,VL
		70723172110	LEAD WIRE ASS'Y,PHOENIX,XHHW,4a4b,MALE,VL
		70723172111	LEAD WIRE ASS'Y,PHOENIX,10a10b,MALE,USER PLUG,VL
		70723172149	LEAD WIRE ASS'Y,PHOENIX,BLUE,4a4b,MALE,VL
		70723172150	LEAD WIRE ASS'Y,PHOENIX,XHHW,BLUE,4a4b,MALE,VL
		70723172151	LEAD WIRE ASS'Y,PHOENIX,BLUE,10a10b,MALE,VL
		70723172170	LEAD WIRE ASS'Y,PHOENIX,XHHW,10a10b,MALE,VL
		70723172503	LEAD WIRE ASS'Y,ILME(CQEE),4a4b,MALE,VL/VH
		70723172504	LEAD WIRE ASS'Y,ILME(CQEE),10a10b,MALE,VL/VH
		70723172505	LEAD WIRE ASS'Y,ILME(CQEE),XHHW,4a4b,MALE,VL/VH
		70723172506	LEAD WIRE ASS'Y,ILME(CQEE),XHHW,10a10b,MALE,VL/VH
		70723172511	LEAD WIRE ASS'Y,ILME(CQEE),4a4b,MALE,USER PLUG,VL/VH
		70723172512	LEAD WIRE ASS'Y,ILME(CQEE),10a10b,MALE,USER PLUG,VL/VH
		70723172519	LEAD WIRE ASS'Y,ILME(CQEE),4a4b,BLUE,MALE,VL/VH
		70723172520	LEAD WIRE ASS'Y,ILME(CQEE),10a10b,BLUE,MALE,VL/VH
		70723172521	LEAD WIRE ASS'Y,ILME(CQEE),XHHW,4a4b,BLUE,MALE,VL/VH
		70723172522	LEAD WIRE ASS'Y,ILME(CQEE),XHHW,10a10b,BLUE,MALE,VL/VH

VCB Type	Breaker type	Code	
VH-Type	VH-06,12,17,20,25,36□32,40,50□13,20,25,32,40,50	70723172503	LEAD WIRE ASS'Y,ILME(CQEE),4a4b,MALE,VL/VH
		70723172504	LEAD WIRE ASS'Y,ILME(CQEE),10a10b,MALE,VL/VH
		70723172505	LEAD WIRE ASS'Y,ILME(CQEE),XHHW,4a4b,MALE,VL/VH
		70723172511	LEAD WIRE ASS'Y,ILME(CQEE),4a4b,MALE,USER PLUG,VL/VH
		70723172512	LEAD WIRE ASS'Y,ILME(CQEE),10a10b,MALE,USER PLUG,VL/VH
		70723172519	LEAD WIRE ASS'Y,ILME(CQEE),4a4b,BLUE,MALE,VL/VH
		70723172520	LEAD WIRE ASS'Y,ILME(CQEE),10a10b,BLUE,MALE,VL/VH
		70723172521	LEAD WIRE ASS'Y,ILME(CQEE),XHHW,4a4b,BLUE,MALE,VL/VH
		70723173105	LEAD WIRE ASS'Y,PHEONIX,4A4B+OPTION,VH,USER PLUG
		70723173106	LEAD WIRE ASS'Y,PHEONIX,10A10B+OPTION,VH,USER PLUG
		70723173109	LEAD WIRE ASS'Y,PHEONIX,4A4B+OPTION,VH,MALE
		70723173110	LEAD WIRE ASS'Y,PHEONIX,10A10B+OPTION,VH,MALE
		70723173111	LEAD WIRE ASS'Y,PHEONIX,4A4B+OPTION,BLUE,VH,MALE
		70723173112	LEAD WIRE ASS'Y,PHEONIX,4A4B+OPTION,BLUE(XHHW),VH,MALE
		70723173113	LEAD WIRE ASS'Y,PHEONIX,10A10B+OPTION,BLUE,VH,MALE
		70723173119	LEAD WIRE ASS'Y,PHEONIX,4A4B+OPTION(XHHW),VH,MALE

Accessories Item Code

Lead wire

VCB Type	Breaker type	Code	
VH-Type	VH-06,12,17,20,25,36□32, 40,50□13,20,25,32,40,50	70723172503	LEAD WIRE ASS'Y,ILME(CQEE),4a4b,MALE,VL/VH
		70723172504	LEAD WIRE ASS'Y,ILME(CQEE),10a10b,MALE,VL/VH
		70723172505	LEAD WIRE ASS'Y,ILME(CQEE),XHHW,4a4b,MALE,VL/VH
		70723172511	LEAD WIRE ASS'Y,ILME(CQEE),4a4b,MALE,USER PLUG,VL/VH
		70723172512	LEAD WIRE ASS'Y,ILME(CQEE),10a10b,MALE,USER PLUG,VL/VH
		70723172519	LEAD WIRE ASS'Y,ILME(CQEE),4a4b,BLUE,MALE,VL/VH
		70723172520	LEAD WIRE ASS'Y,ILME(CQEE),10a10b,BLUE,MALE,VL/VH
		70723172521	LEAD WIRE ASS'Y,ILME(CQEE),XHHW,4a4b,BLUE,MALE,VL/VH
		70723173105	LEAD WIRE ASS'Y,PHEONIX,4A4B+OPTION,VH,USER PLUG
		70723173106	LEAD WIRE ASS'Y,PHEONIX,10A10B+OPTION,VH,USER PLUG
		70723173109	LEAD WIRE ASS'Y,PHEONIX,4A4B+OPTION,VH,MALE
		70723173110	LEAD WIRE ASS'Y,PHEONIX,10A10B+OPTION,VH,MALE
		70723173111	LEAD WIRE ASS'Y,PHEONIX,4A4B+OPTION,BLUE,VH,MALE
		70723173112	LEAD WIRE ASS'Y,PHEONIX,4A4B+OPTION,BLUE(XHHW),VH,MALE
		70723173113	LEAD WIRE ASS'Y,PHEONIX,10A10B+OPTION,BLUE,VH,MALE
		70723173119	LEAD WIRE ASS'Y,PHEONIX,4A4B+OPTION(XHHW),VH,MALE

VCB Type	Breaker type	Code	
VH-Type	VH-06,12 P,E,F,G 32,40 A,B 13,20,32 LVB-06,12 P,E,F-32,40L/ 12,20,30 (Pro-MEC & Susol PI)	70713143012	LEAD WIRE,4A4B+OPTION+P-S/W,XHHW,PRO-MEC
		70713143013	LEAD WIRE,10A10B+OPTION+P-S/W,XHHW,PRO-MEC
		70713143020	LEAD WIRE,4A4B+OPTION+P-S/W,BLUE,PRO-MEC
		70713143021	LEAD WIRE,10A10B+OPTION+P-S/W,BLUE,PRO-MEC
		70713143024	LEAD WIRE,4A4B+Option,PHOENIX,PRO-MEC
		70713143025	LEAD WIRE,10A10B+OPTION,PHOENIX,PRO-MEC
		70713143030	LEAD WIRE,4A4B+P-S/W,XHHW/SIS 1.5SQ,BLUE,PRO-MEC
		70713143031	LEAD WIRE,10A10B+P-S/W,XHHW/SIS 1.5SQ,BLUE,PRO-MEC
		70713143044	LEAD WIRE,4A4B+Option,BLUE,PHOENIX,PRO-MEC
		70713143045	LEAD WIRE,10A10B+OPTION,BLUE,PHOENIX,PRO-MEC
		70713143046	LEAD WIRE,10A10B+OPTION,XHHW/SIS 1.5SQ,BLUE,PHOENIX,PRO-MEC
		70713143047	LEAD WIRE,4A4B+Option,XHHW/SIS 1.5SQ, BLUE,PHOENIX,PRO-MEC
		70713143048	LEAD WIRE,10A10B+OPTION,XHHW/SIS 1.5SQ,PHOENIX,PRO-MEC
		70713143049	LEAD WIRE,4A4B+Option,XHHW/SIS 1.5SQ,PHOENIX,PRO-MEC
		70723143117	LEAD WIRE ASS'Y,4A4B+OPTION+POSITION,PRO-MEC,AMP
		70723143118	LEAD WIRE ASS'Y,10A10B+OPTION+POSITION,PRO-MEC,AMP
		73263143007	PLUG,4A4B+OPTION+POSITION S/W,PRO-MEC
		73263143008	PLUG,10A10B+OPTION+POSITION S/W,PRO-MEC
		73263143030	PLUG,USER,4A4B+OPTION,PRO-MEC,PHEONIX(B-TYPE)
		73263143031	PLUG,USER,10A10B+OPTION,PRO-MEC,PHEONIX(B-TYPE)

Lead wire

VCB Type	Breaker type	Code	
VH-Type LVB-Type	VH-06,12 P,E,F,G 32,40 A,B 13,20,32 LVB-06,12 P,E,F-32,40L/ 12,20,30 (Pro-MEC & Susol PI)	70713143012	LEAD WIRE,4A4B+OPTION+P-S/W,XHHW,PRO-MEC
		70713143013	LEAD WIRE,10A10B+OPTION+P-S/W,XHHW,PRO-MEC
		70713143020	LEAD WIRE,4A4B+OPTION+P-S/W,BLUE,PRO-MEC
		70713143021	LEAD WIRE,10A10B+OPTION+P-S/W,BLUE,PRO-MEC
		70713143030	LEAD WIRE,4A4B+P-S/W,XHHW/SIS 1.5SQ,BLUE,PRO-MEC
		70713143031	LEAD WIRE,10A10B+P-S/W,XHHW/SIS 1.5SQ,BLUE,PRO-MEC
		70723143117	LEAD WIRE ASS'Y,4A4B+OPTION+POSITION,PRO-MEC,AMP
		70723143118	LEAD WIRE ASS'Y,10A10B+OPTION+POSITION,PRO-MEC,AMP
		70723143524	LEAD WIRE ASS'Y,4A4B,ILME(CQEE),PRO-MEC
		70723143525	LEAD WIRE ASS'Y,10A10B,ILME(CQEE),PRO-MEC
		70723143544	LEAD WIRE ASS'Y,4A4B,BLUE,ILME(CQEE),PRO-MEC
		70723143545	LEAD WIRE ASS'Y,10A10B,BLUE,ILME(CQEE),PRO-MEC
		70723143546	LEAD WIRE ASS'Y,10A10B,XHHW/SIS 1.5SQ, BLUE,ILME(CQEE),PRO-MEC
		70723143547	LEAD WIRE ASS'Y,4A4B,XHHW/SIS 1.5SQ, BLUE,ILME(CQEE),PRO-MEC
		70723143548	LEAD WIRE ASS'Y,10A10B,XHHW/SIS 1.5SQ,ILME(CQEE),PRO-MEC
		70723143549	D WIRE ASS'Y,4A4B,XHHW/SIS 1.5SQ,ILME(CQEE),PRO-MEC
		70723143651	LEAD WIRE ASS'Y,4a4b,ILME(CQEE),MALE,USER PLUG,PRO-MEC
		70723143652	LEAD WIRE ASS'Y,10a10b,ILME(CQEE),MALE,USER PLUG,PRO-MEC
		73263143007	PLUG,4A4B+OPTION+POSITION S/W,PRO-MEC
		73263143008	PLUG,10A10B+OPTION+POSITION S/W,PRO-MEC

Accessories Item Code

Handle

Breaker type	Cradle		Code		Appearance
VL-06□08,13	E,F,G		55223171101	HANDLE ASS'Y,DRAWOUT,VL	
VL-06,12,17□ 20,25,31.5 VL-24,25□13, 16,25	E,F,G		55213143005	HANDLE,DRAW OUT,Pro-MEC 24kV E/F	
	H.K	A	55223172407	HANDLE ASS'Y,RACKING IN/OUT,SUSOL,VL	 For medium size CB [Short]
		B	55223172403	HANDLE ASS'Y,VCB,SUSOL,MESG	 For medium size CB [Long
		C	55223172405	HANDLE ASS'Y,VCB,SUSOL,UNIVERSAL,VL	 With universal joint [Short]
		D	55223172406	HANDLE ASS'Y,VCB,SUSOL,UNIVERSAL MESG,VL	 With universal joint [Long]

Breaker type	Cradle	Code		Appearance
VH type	Spring Charge Handle	55213143006	HANDLE,CHARGING,PRO-MEC	
VH-06□32, 40(P,E,F,G) LVB-06,12□ 32,40L(G/T)	E,F,G	55213143005	HANDLE,DRAW OUT,Pro-MEC 24kV E/F	
	G/T	55213143001	HANDLE,DRAW-OUT	
		55213143022	HANDLE,DRAW-OUT,150L	
		55213163003	HANDLE,DRAW-OUT,4.76/15/38kV NUCLEAR	 With universal joint

Handle

Breaker type	Cradle		Code		Appearance
VH-06,12,17 □50 VH-20,25,36 □25,32,40	H	A	55223172407	HANDLE ASS'Y,RACKING IN/OUT,SUSOL,VL	 For medium size CB [Short]
		B	55223172403	HANDLE ASS'Y,VCB,SUSOL,MESG	 For medium size CB [Long]
		C	55223172405	HANDLE ASS'Y,VCB,SUSOL,UNIVERSAL,VL	 With universal joint [Short]
		D	55223172406	HANDLE ASS'Y,VCB,SUSOL,UNIVERSAL MESG,VL	 With universal joint [Long]
		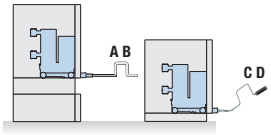			

Panel door type	Code		Appearance
Right open (Standard handle)	55223172701	SUPPORTER ASS'Y,LIFTING(R),17.5kV 50kA	
Right open (Standard handle)	55223172703	SUPPORTER ASS'Y,LIFTING(L),17.5kV 50kA	
Ratchet type (In case of insufficient operating space)	55223172101	SUPPORTER ASS'Y,LIFTING(R),24kV	

Accessories Item Code

Handle

Breaker type	Cradle		Code		Appearance
VL-06□08,13	E,F,G		55223171101	HANDLE ASS'Y,DRAWOUT,VL	
VL-06□20, 25	E,F,G		55213143005	HANDLE,DRAW OUT,PRO-MEC 24KV E/F	
VL-06□20, 25	H,K	A	55223172407	HANDLE ASS'Y,RACKING IN/OUT,SUSOL,VL	
		B	55223172403	HANDLE ASS'Y,VCB,SUSOL,MESG	
VH-06, 12, 17, 24, 35, 36□		C	55223172405	HANDLE ASS'Y,VCB,SUSOL,UNIVERSAL,VL	
		D	55223172406	HANDLE ASS'Y,VCB,SUSOL,UNIVERSAL MESG,VL	
		C, D	55213143006	CHARGING HANDLE	
VL-06□20, 25		A		PERATING HANDLE FOR EARTHING S/W	
		B			
VH-06, 12, 17, 24, 35, 36□		C			
		D			

Racking in/out handle for H, K cradle

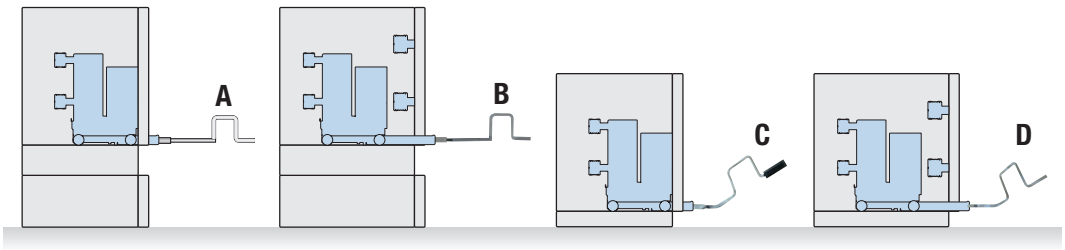

DIGITAL SUPPORT HUB

SCAN THE QR CODE FOR INSTANT PRODUCT INFORMATION AND EXPERT SUPPORT



LSE LENS
One Scan,
More Materials
Scan the QR code to instantly access product materials

Product Finder
Search Smarter.
Find Faster
Quickly discover the best-fit product for your needs

Download Center
Download with
Ease and Speed
Instantly access datasheets, manuals, and CAD files

Tech Hub-Youtube
Expert Guidance,
Now on YouTube
Watch trusted tutorials and product guides from real experts

Headquarter
127 LS-ro (Hogye-dong) Dongan-gu, Anyang-si, Gyeonggi-Do, 14119, Korea

Seoul Office
LS Yongsan Tower, 92, Hangang-daero, Yongsan-gu, Seoul, 04386, Korea
TEL: 82-2-2034-4916, 4684, 4429

C/Montcada 7, Pol. Ind. Les Pereres
08130 Santa Perpètua de Mogoda
Barcelona - Spain

Tel. +34 935 748 206
info@vectorenergy.com
www.vectorenergy.com

Specifications in this catalog are subject to change without notice due to continuous product development and improvement

© 2011. 1 LS ELECTRIC Co., Ltd. All rights reserved. / English (21) 2025. 01 Staffcom