

Beyond X™

Susol VCS

Vacuum Contactor



vector Energy

LS ELECTRIC

Susol Vacuum Contactor

Customer satisfaction through quality and services, Susol Vacuum Contactor

Susol Vacuum Contactor applied with a self-produced Vacuum Interrupter (VI), a device widely recognized for its innovative technology, has passed the authorized agency's development testing, proving their high quality.





Susol Super Solution

Vacuum Contactor

Contents

- Characteristics 04
- Rating 10
- Model classification 12
- External structure 16
- Internal structure 17
- Auxiliary devices 18
- Racking-in/Out operation 25
- Control circuit diagram 26
- Dimensions 30
- Technical data 38
- Current limiting power fuse (PF) 39
- List of current limiting PFs 40
- Protection coordination 42
- Characteristic curve 43

Characteristics

3.6 / 7.2kV

Performance verification within a short time with the developed earthing switch
Dual standard acquisition: IEC/UL





- Rated short time : 1 second
- Standard duty cycle : CO
- Compatible with existing product (Tri-MEC)
- Equipped with a wide range of cradles:
  Fixed type, E, F, G, B, M and H-class
- CB compartment for MCSG (Phase-to-phase 150mm VCS)
  - Box-type cradle available

Diverse control power

- DC 110, 125, 220V - AC 110, 125, 220V

Various auxiliary devices

- VCS Part: Locking magnet, key lock, button cover, button padlock, padlock (H-type door interlock) and fuse checker
- Cradle part: Position switch, earthing switch & accessories, door and door interlock
- Others: Racking in / out Handle, CTD (Condenser trip device) and PT (Potential transformer)

Automatic racking-in / Out display

Applied standards & certification

- IEC62271-106, UL347 - V-check (KTC) certification
- Certification for classification: LR (Lloyd's register), NK (Nippon kaiji kyokai), KR(Korean register), ABS(American bureau of shipping), RS(Russian maritime register of shipping)

Authorized agency's development testing & certification

- Authorized development testing agency based on IEC62271-106
- Verification for PF-50kA short circuit protection coordination
  - Breaking test: 50kA short-circuit breaking successful
  - Making test: 50kA short-circuit making successful
- KAS-certified V-check mark





12kV

GB / T 14808 Standard - Performance verification within a short time (4sec)





- Rated short time : 4 seconds
- Standard duty cycle : CO
- Compatible with existing product (Tri-MEC)
- Equipped with a wide range of cradles: M and H-class
- CB compartment for MCSG (Phase-to-phase 150mm VCS)
  - Box-type cradle available

Diverse control power

- DC 110, 125, 220V - AC 110, 125, 220V

Various auxiliary devices

- VCS Part: locking magnet, key lock, button cover, button padlock, padlock (H-type door interlock) and fuse checker
- Cradle part: Position switch, earthing switch & Accessories, door and door interlock
- Others: Racking in / out handle and lifting hook

Automatic racking-in / Out display applied standards & certification

- IEC62271-106

Authorized agency's development testing & certification

- Authorized development testing agency based on IEC62271-106 (KERI)
- Verification for PF-40kA short circuit protection coordination
  - Breaking test: 40kA short-circuit breaking successful
  - Making test: 40kA short-circuit making successful


TEST REPORT

KERI


TEST REPORT

KERI

Characteristics

Compatible with domestic / Overseas VCS manufacturers'models





Note) Please refer to the contact information for retrofit products.

Integral bushing

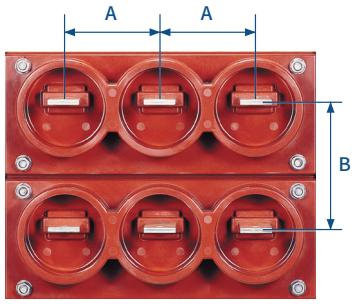

A : Clearance
B : In-phase spacing

Vacuum Interrupters



Compatibility

It is a customer-oriented product considering its easy maintenance and economic feasibility. In particular, it is easy to replace the product because the new / Old model's body, distance between the racking-in / Out rails of cradles, clearance and in-phase spacing are the same.

High-performance, high-reliability and long life

The vacuum interrupter (VI) complies with international standards, including IEC, ANSI and NEMA; and it is highly reliable as it collectively performs brazing at the vacuum furnace.

Outstanding mechanical strength and degassing

It uses a high alumina ceramic tube for better mechanical strength. With superb degassing at high temperature, it demonstrates excellent durability and frequency in switching.

High-speed breaking and arc discharge in a short time

Because of the fast vacuum insulation recovery characteristic,
the current is cut off at the initial current zero point after contact opening,
so contact damage and losses are minimal.

Various safety devices for users



- Racking-i / Out interlock device
- Truck for external racking-in / out
- One-mold fuse holder
- A wide range of dual protective devices
- Power fuse operation indicator (Fuse checker) and micro-switch



Metal clad switchgear

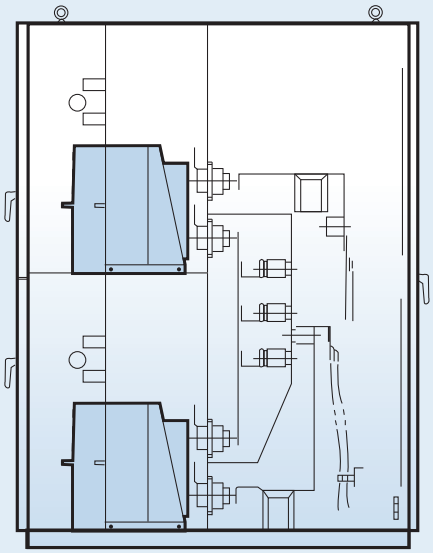

Metal clad switchgear applied

An integral cradle bushing (Class B) and fuse holder are structured in one mold, which can be applied to the metal clad switchgear.

Interlock device

An interlock device is basically built-in for the user's safety when racking in / Out.

Mechanical interlock type

2 VC units are connected with the mechanical interlock device for stable and convenient motor (Reverse) driving and commercial / Back-up power transfer.

Truck for external racking-out and lever device

It is a device that may rack in / Out the VC units without opening the door outside the panel, minimizing the risk of electric shock.

Characteristics

Body & cradle

Fixed type (3.6/7.2/12kV) c UL us

• Fixed type is divided into a standard type and fuse-combined type.



3.6/7.2kV



3.6 / 7.2kV (Fuse-combined)



12kV

Lever type (3.6/7.2kV) c UL us

• Lever type is divided into a standard type and fuse-combined type.
• E / F / G-class cradles are applicable.



3.6/7.2kV



3.6/7.2kV (Fuse-combined)

Cradle

- **E-class cradle:** An economical cradle in a basic structure.
- **F-class cradle:** An E-class cradle attached with an insulating shutter.
- **G-class cradle:** A premium E-class cradle with an insulating shutter and bushing.


E-class cradle


F-class cradle


G-class cradle

Screw type (3.6/7.2kV) c UL us

- Screw type is divided into a standard type and fuse-combined type.
- B / H-class cradles are applicable.



3.6/7.2kV



3.6/7.2kV (Fuse-combined)

Cradle

- **B-class cradle:** A premium E-class cradle with an insulating shutter and bushing.
- **H-class cradle:** A premium cradle with an insulating shutter, bushing and earthing switch.



B-class cradle



H-class cradle

Screw type (12kV)

- 12kV VCS screw type is divided into a standard type and fuse-combined type.
- M / H (12kV)-class cradles are applicable.



12kV

Cradle

- **M-class cradle:** A premium cradle with a metal shutter and bushing.
- **H-class cradle:** A premium cradle with a metal shutter and bushing, bushing and earthing switch.



M-class cradle



H-class cradle

Rating

VC-03/06 c UL us





Type			Fixed type (Z)				Non-fuse lever type (D)				Non-fuse screw type (K)			
Model	Continuous excitation type (E)		VC-03Z -42□E	VC-06Z -42□E	VC-03Z -44□E	VC-06Z -44□E	VC-03D -42□E	VC-06D -42□E	VC-03D -44□E	VC-06D -44□E	VC-03K -42□E	VC-06K -42□E	VC-03K -44□E	VC-06K -44□E
	Latch type (L)													
Rated voltage		Ur(kV)	3.6	7.2	3.6	7.2	3.6	7.2	3.6	7.2	3.6	7.2	3.6	7.2
Rated current		Ie(A)	200		400		200		400		200		400	
Rated frequency		fr(Hz)	50 / 60											
Rated breaking current		(kA, CO)	4											
Rated short time withstand current		(kA-sec)	2.4kA-30s, 4kA-10s, 6kA-2s, 6.3kA-1s											
Rates short time peak current		(kApeak-0.5Cycle)	60											
Operating frequency (AC3])		(op./hour)	E: Continuous excitation 1200, L: Latch 300											
Life	Mechanical	(10,000 times)	E: Continuous excitation 100, L: Latch 30											
	Electrical	(10,000 times)	30											
Lightning impulse		Up (kV)	60											
Power frequency withstand voltage		Ud (kV/1min)	20											
Operating power excitation			E: Continuous excitation, L: Latch											
Operating voltage			DC / AC 110V, 125V, 220V											
Auxiliary contact	Current-carrying capacity	(A)	10(AC)											
	Applied voltage	(V)	600max ~ 48min											
	Number of contacts		Continuous excitation 3a3b, latch 2a2b				2a2b							
Maximum capacity (Three-phase)	Motor	(kW)	750	1,500	1,500	3,000	750	1,500	1,500	3,000	750	1,500	1,500	3,000
	Transformer	(kVA)	1,000	2,000	2,000	4,000	1,000	2,000	2,000	4,000	1,000	2,000	2,000	4,000
	Condenser	(kVA)	750	1,500	1,200	2,000	750	1,500	1,200	2,000	750	1,500	1,200	2,000
Certification	Lloyd's register of shipping		○				○				○			
	Nippon kaiji kyokai		○				○				○			
Weight		(kg)	24				41				56			
Standard			IEC62271-106 / UL347											





Type			Combination lever type (G)				Combination screw type (B, T)				Combination fixed type (F)			
Model	Continuous excitation type (E)		VC-03G -42□E	VC-06G -42□E	VC-03G -44□E	VC-06G -44□E	VC-03B(T) -42□E	VC-06B(T) -42□E	VC-03B(T) -44□E	VC-06B(T) -44□E	VC-03F -42□E	VC-06F -42□E	VC-03F -44□E	VC-06F -44□E
	Latch type (L)													
Rated voltage		Ur(kV)	3.6	7.2	3.6	7.2	3.6	7.2	3.6	7.2	3.6	7.2	3.6	7.2
Rated current		Ie(A)	200		400		200		400		200		400	
Rated frequency		fr(Hz)	50/60											
PF Combination	Short-circuit making	Making	50kA (Max)											
	Short-circuit breaking	Breaking	50kA (Max)											
	Transfer-current breaking	(0-3min-0-3min-0)	4kA											
Rated breaking current		(kA, CO)	4kA (40/50kA with fuse)											
Rated short time withstand current		(kA-sec)	2.4kA-30s, 4kA-10s, 6kA-2s, 6.3kA-1s											
Rates short time peak current		(kApeak-0.5Cycle)	60											
Operating frequency (AC3)		(op. / hour)	E: Continuous excitation 1200, L: Latch 300											
Life	Mechanical	(10,000 times)	E: Continuous excitation 100, L: Latch 30											
	Electrical	(10,000 times)	30											
Lightning impulse		Up (kV)	60											
Power frequency withstand voltage		Ud (kV / 1min)	20											
Operating power excitation			E: Continuous excitation, L: Latch											
Operating voltage			DC/AC 110V, 125V, 220V											
Auxiliary contact	Current-carrying capacity	(A)	10(AC)											
	Applied voltage	(V)	600max ~ 48min											
	Number of contacts		2a2b											
Maximum capacity (Three-phase)	Motor	(kW)	750	1,500	1,500	3,000	750	1,500	1,500	3,000	750	1,500	1,500	3,000
	Transformer	(kVA)	1,000	2,000	2,000	4,000	1,000	2,000	2,000	4,000	1,000	2,000	2,000	4,000
	Condenser	(kVA)	750	1,500	1,200	2,000	750	1,500	1,200	2,000	750	1,500	1,200	2,000
Certification	Lloyd's register of shipping		○				○				○			
	Nippon kaiji kyokai		○				○				○			
Weight		(kg)	46				62				46			
Standard			IEC62271-106 / UL347											

Note) Weight of the combination lever type excludes the PT weight. *Applied load capacity varies according to the PT rating.

VC-12





Type			Fixed type (Z)	Non-fuse screw type (K)	Combination screw type (B)
Model	Continuous excitation type (E)		VC-12Z-44□E	VC-12K-44□E	VC-12B-44□E
	Latch type (L)				
Rated voltage		Ur(kV)	12		
Rated current		Ie(A)	400		
Rated frequency		fr(Hz)	50/60		
Rated breaking current		(kA, CO)	4		
Rated short time withstand current		(kA-sec)	2.4kA-30s, 4kA-10s, 6kA-2s, 6.3kA-4s		
Rates short time peak current		(kApeak-0.5Cycle)	60		
Operating frequency (AC4)		(op. / hour)	E: Continuous excitation 1200, L: Latch 300		
Life	Mechanical	(10,000 times)	E: Continuous excitation 100, L: Latch 30		
	Electrical	(10,000 times)	30		
Lightning impulse		Up (kV)	75		
Power frequency withstand voltage		Ud (kV/1min)	42		
Operating power excitation			E : Continuous exciation, L : Latch		
Operating voltage			Continuous excitation : DC/AC 110V,125V,220V Latch : DC/AC 110V,125V,220V		
Auxiliary contact	Current-carrying capacity	(A)	10(AC)		
	Applied voltage	(V)	600max ~ 48min		
	Number of contacts		Continuous excitation 3a3b, Latch 2a2b	2a2b	
Maximum capacity (Three-phase)	Motor	(kW)	6,000		
	Transformer	(kVA)	8,000		
	Condenser	(kVA)	4,000		
Weight		(kg)	30	60	60
Standard			IEC62271-106		



Power fuse rating

Type		Model	Rated voltage (kV)	Rated current (A)	External diameter (mm)	Length (mm)
DIN type		LFL-3/6G-□B	3.6/7.2	5, 10, 20, 30, 40, 50, 63, 75, 100	45	192
		LFL-3/6G-□B	3.6/7.2	125		292
		LFL-3G-□B	3.6	160, 200		292
		LFL-6G-□B	7.2	160, 200		292
KS type	For general loading	LFL-3/6G-□	3.6/7.2	5(T1.5), 10(T3), 20(T7.5), 30(T15), 40(T20), 50(T30), 60(T30)	50	261
				75(T50), 100(T75)	60	311
		LFL-3G-□	3.6	150(T100), 200(T150)	60	311
				300(T250), 400(T300)	77	311
		LFL-6G-□	7.2	150(T100), 200(T150)	77	311
	For motor protection	LFL-3M-□	3.6	M20, M50, M100	60	200
				M150, M200	77	200
				M300 , (M400)	87	250
		LFL-6M-□	7.2	M20, M50	60	311
				M100, M150 , M200	77	350
				M300 , (M400)	87	450

*LFL-6G-300, 400 cannot be combined with VCS.
*Our 12kV VCS has been tested for s ircuit protection (SCPD: Short circuit protective devices) and completed verification for fuse combination. (Test fuse : SIBA, 12kV, 250A)

Model classification

3.6 / 7.2kV body

VC – 03 G – 4 2 E E D1

Unique identifier	
VC	Vacuum contactor

Rated voltage (kV)	
03	3.6
06	7.2

Connection type	
Z	Fixed type
D	Non-fuse lever type
G	PF-combined lever type
F	PF-combined fixed type
K	Non-fuse screw type
B	PF-combined screw type
P	Non-fuse screw type(P150)
T	PF-combined screw type(P150)

Note)
For P,T type body, 12kV cradle is applicable only.

Breaking current (kA)	
4	4

Rated current (A)	
2	200
4	400

Operating method	
E	Continuous excitation
L	Latch

Measurement No.	
E	Susol

Operating voltage	
D1	DC 110V
D2	DC 220V
D3	DC 125V
A1	AC 110V
A2	AC 220V
A3	AC 125V

C1

Fuse checker	
C0	None
C1	Standard type (KS, LS DIN)
C2	SIBA type

P2

PT	
P0	None
P1	100Var, 1EA, 60Hz
P2	100Var, 2EA, 60Hz
P3	200Var, 1EA, 60Hz
P4	200Var, 2EA, 60Hz
P5	100Var, 1EA, 50Hz
P6	100Var, 2EA, 50Hz
P7	200Var, 1EA, 50Hz
P8	200Var, 2EA, 50Hz

Note)
PT is available only for G type at the operating AC.

T1

Truck	
T0	Standard type
T1	Earthing switch

Note)
When applying D/G type, select T0 option.
When applying K/B type, select T0 or T1 option.
When applying P/T type, select T1 option.

F01

Fuse								
Standard	Code	Description	External diameter	Assembled length	VC Rating 3.6kV / 200A	3.6kV / 400A	7.2kV / 200A	7.2kV / 400A
IEC	F00	"When Z, D or K type is selected"	-	-	-	-	-	-
	F01	LFL-3/6G-5~60	Ø50	261mm	●	●	●	●
	F02	LFL-3M-20~100	Ø60	200mm	●	●	-	-
	F03	LFL-3/6G-75~100	Ø60	310mm	●	●	●	●
		LFL-3G-150~200			●	●	-	-
		LFL-6M-20~50			-	-	●	●
	F04	LFL-3M-150~200	Ø77	202mm	●	●	-	-
	F05	LFL-3G-300~400	Ø77	307mm	-	●	-	-
		LFL-6G-150~200			-	-	●	●
	F06	LFL-6M-100~200	Ø77	344mm	-	-	●	●
	F07	LFL-3M-300~400	Ø87	252mm	-	●	-	-
	F08	LFL-6M-300~400	Ø87	450mm	-	-	-	●
	F09	LFL-3/6G-5~100B	Ø45	258mm	●	●	●	●
	F10	LFL-3/6G-125B~200B	Ø45	358mm	●	●	●	●
UL	F13	Mersen Fuse A072F	Ø77	403mm	●	●	●	●

Note)
1. This table is about fuse clip and fuse should be ordered separately.
2. When applying SIBA Fuse, select F09 for 192mm and F10 for 292mm.

BI

Accessory	
Code	Description
A	Padlock
B	Button padlock
C	Button cover
D	Lead wire(3M)
E	Plug,pin(21pin)
G	Blue, flame-retardant wire (Lead wire)
H	Yellow, flame-retardant wire (Lead wire)
I	Position S / W
J	Additional 3a3b auxiliary contact
K	3Position S / W
L	CTD
P	Top protruding lead wire

Note)
1. Accessory 'B' and 'C' are not available at the same time.
2. When accessory 'I' is applied, cradle accessory PS-related items should be added. ('A, B, Q, R, S and T')
3. When accessory 'J' is applied, the auxiliary contact is 6a6b for the fixed type continuous excitation and it is 5a5b for the fixed type latch and lever type.
4. Accessory 'L' is the default setting only for 3.6 / 7.2kV VCS latch type with the operating voltage AC.
5. Accessory 'J' and 'L' are not available at the same time.
6. Accessory 'K' is available for 3.6 / 7.2kV G type and cradle accessory 'C' should be selected.
7. Accessory 'D', 'E', 'G' and 'H' are lead wire for users. When not selected, a basic wire (1.5m) is applied.
8. The position S/W option for P/T type, choose 12kV body's position S/W option(M, N or O)
9. The Option P is applicable P/T type only. (See page33)

Accessory option table

Type	VC type								
	Z	D	G	F	K	B	P	T	Remarks
A					●	●	●	●	-
B	●	●	●	●	●	●	●	●	Latch type
C	●	●	●	●	●	●	●	●	Latch type
D	●	●	●	●	●	●	●	●	-
E	●	●	●	●	●	●	●	●	-
G	●	●	●	●	●	●	●	●	-
H	●	●	●	●	●	●	●	●	-
I		●	●		●	●	●	●	-
J	●	●	●	●	●	●	●	●	-
K			●						-
L	●	●	●	●	●	●	●	●	Latch type AC
M							●	●	-
N							●	●	-
O							●	●	-
P							●	●	-



12kV body

VC – 12 B – 4 4 E E D1

Unique identifier	
VC	Vacuum contactor

Rated voltage (kV)	
12	12

Connection type	
Z	Fixed type
K	Non-fuse screw type
B	PF-combined screw type

Note)
1. C0, P0, T0, F00 is the default setting for type Z.
2. C0, P0, F00 is the default setting for type K.

Breaking current (kA)	
4	4

Rated current (A)	
4	400

Operating method	
E	Continuous excitation
L	Latch

Measurement No.	
E	Susol

Operating voltage	
D1	DC 110V
D2	DC 220V
D3	DC 125V
A1	AC 110V
A2	AC 220V
A3	AC 125V

C3

Fuse checker	
C0	None
C3	Standard / SIBA type (12kV)

P0

PT	
P0	None

T1

Truck	
T0	Standard type
T1	Earthing switch

Note)
T (Truck) is available only for K and B types.

F11

Fuse				
Code	Description	External diameter	Assembled length	VC rating (Voltage / Current)
F00	When Z, D or K type is selected			
F11	DIN type 292mm	Φ45	358mm	12kV 400A
F12	DIN type 442mm	Φ45	508mm	12kV 400A

Note)
This table is about fuse clip and fuse should be ordered separately. LS does not have a 12kv fuse, so choose it from other manufacturers.

BJ

Accessory	
Code	Description
A	Padlock
B	Button padlock
C	Button cover
D	Lead wire(3M)
E	Plug, Pin(21Pin)
F	Lifting hook
G	Blue, flame-retardant wire (Lead wire)
H	Yellow, flame-retardant wire (Lead wire)
J	Additional 3a3b auxiliary contact
L	CTD (Condenser Trip Device)
M	Position S / W (Test : 1a1b, Service : 2b)
N	Position S / W(Test : 2a, Service : 2a)
O	Position S / W (Test : 1a1b, Service : 1a1b)

Note)
1. Accessory 'B' and 'C' are not available at the same time
2. When accessory 'J' is applied, the auxiliary contact is 6a6b for the fixed type continuous excitation and it is 5a5b for the fixed type latch and lever type.
3. Accessory 'D', 'E', 'G' and 'H' are lead wire for users. When not selected, a basic wire (1.5m) is applied.
4. Accessory "L" is the default setting only for 12kV VCS latch type with the operating voltage AC.

Accessory option table

Type	VC type			
	Z	K	B	Remarks
A		●	●	-
B	●	●	●	Latch type
C	●	●	●	Latch type
D	●	●	●	-
E	●	●	●	-
G	●	●	●	-
H	●	●	●	-
J	●	●	●	-
L	●	●	●	Latch type AC
M		●	●	-
N		●	●	-
O		●	●	-



Model classification

3.6 / 7.2kV cradle

VCL – 3/6 – 42/44 – E – A

Unique identifier	
VCL	VCS cradle

Rated voltage (kV)	
3 / 6	3.6 / 7.2

Breaking current & rated current	
42 / 44	Breaking current 4kA
	Rated current 200 / 400A

Cradle type	
E	E-class (Body: D,G)
F	F-class (Body: D,G)
G	G-class (Body: D,G)
B	Screw type (Body: K,B)
H	Earthing S / W Combination type (Body: K,B)

Accessory	
A	PS1 : 1a1b
B	PS2: 2a2b
C	3 Position S / W
D	Earthing S/W without Aux S/W
E	Earthing S/W with Aux S/W (2a2b)
F	Earthing S/W with Aux S/W (4a4b)
H	ES with locking magnet (DC 110V)
I	ES with locking magnet (DC 220V)
J	ES with locking magnet (DC 125V)
K	ES with locking magnet (AC 110V)
L	ES with locking magnet (AC 220V)
M	ES with locking magnet (AC 48V)
N	ES with locking magnet (DC 24V)
O	ES with locking magnet (DC 48V)
Q	PS1 : 1a1b (Flame-resisting, blue)
R	PS1 : 1a1b (Flame-resisting, yellow)
S	PS2 : 2a2b (Flame-resisting, blue)
T	PS2 : 2a2b (Flame-resisting, yellow)

Accessory option table

Type	Cradle				
	E	F	G	B	H
A	●	●	●	●	●
B	●	●	●	●	●
C			●		
D					●
E					●
F					●
H					●
I					●
J					●
K					●
L					●
M					●
N					●
O					●
Q	●	●	●	●	●
R	●	●	●	●	●
S	●	●	●	●	●
T	●	●	●	●	●

Note)
1. When applying accessories 'A, B, Q, R, S, T,' body accessory 'I' should be selected.
2. Accessory 'C' is available only for G-class cradle and body accessory 'K' should be selected.
3. Accessory 'D ~ O' is available only for H-type cradle.
4. When H-class is chosen, one of the accessories, 'D,' 'E' or 'F' should be selected.

Flowchart on ordering MI models for 7.2kV VC

VC – MI – 62E – D1 – 62E – D1

Unique identifier	
VC	VC

Product name	
MI	VC type MI

Vacuum contactor (VC1)	
32E	VC-3Z-42EE
34E	VC-3Z-44EE
62E	VC-6Z-42EE
64E	VC-6Z-44EE
32L	VC-3Z-42LE
34L	VC-3Z-44LE
62L	VC-6Z-42LE
64L	VC-6Z-44LE

Operating voltage	
D1	DC 110V
D2	DC 220V
D3	DC 125V
A1	AC 110V
A2	AC 220V
A3	AC 125V

Vacuum contactor (VC2)	
32E	VC-3Z-42EE
34E	VC-3Z-44EE
62E	VC-6Z-42EE
64E	VC-6Z-44EE
32L	VC-3Z-42LE
34L	VC-3Z-44LE
62L	VC-6Z-42LE
64L	VC-6Z-44LE

Operating voltage	
D1	DC 110V
D2	DC 220V
D3	DC 125V
A1	AC 110V
A2	AC 220V
A3	AC 125V

12kV cradle

VCL – 12 – 44 – M – A1

Unique identifier	
VCL	VCS cradle

Rated voltage (kV)	
12	12

Breaking current & rated current	
44	Breaking current 4kA
	Rated current 400A

Cradle type	
M	Metal shutter screw type
H	H type screw type

Accessory	
1	ES(Standard earthing switch) without option
2	ES with position S / W(2a2b)
4	ES with position S / W(6a6b)
6	Locking magnet for ES: DC 110V
7	Locking magnet for ES: DC 220V
8	Locking magnet for ES: DC 125V
9	Locking magnet for ES: DC 24V
A	Locking magnet for ES: DC 48V
B	Locking magnet for ES: AC 48V
C	Locking magnet for ES: AC 110V
D	Locking magnet for ES: AC 220V
L	Temperature monitoring sensor

Note)
Accessories are available only for H type cradle.



External structure

3.6 / 7.2kV lever type



Combination screw type

1. Cradle
2. Fuse case
3. Fuse checker
4. Front cover
5. Aux switch
6. On / Off display
7. Counter
8. Manual trip button
9. Interlock lever
10. Standard racking-in / Out truck

12kV screw type



Single screw type

1. Fuse case
2. Front cover
3. On / Off display
4. Counter
5. Manual trip button
6. Racking-in / Out handle
7. Racking-in / Out handle mounting hole
8. Test/Run position checker
9. Truck for external racking-in / Out

Internal structure

Main circuit

The main circuit part supports the VI main circuit terminal and shunt inside the three-phase, integral insulating mold, and the VI's operating part is connected to the operating equipment with the insulating rod. The VI's operating part is switched on and off by the operating devices in the lower section based on the insulating rod.

Operating equipment

The operating equipment is a simple structure taking into account its frequent use and long life. A link equipment is not used and an electromagnet, operating mainly the core rotates the cross bar and the lever fixed to the axis moves up and down, in order to switch (Make and break) the contact based on an appropriate level of pressure, stabilizing its operation.

Operating method

Continuous excitation

The operating core is suctioned into the fixed core only when the operating coil is under excitation so as to turn on the contactor. When the excitation ends, the operating coil rotates based on the cross bar (Spring) to open and the contactor turns off.

Latch type

This method has a latch to disconnect the coil current and to mechanically hold the equipment after closing (Making) is completed. The trip coil is excited and the latch is mechanically disconnected to turn off the contactor. In case of manual tripping, the manual trip button should be turned on to disconnect the latch and trip the contactor.

Model	Operating method	Control voltage (V)	Making current (A)/ Making time (ms)	Trip current (A)/ Trip time (ms)	Holding current (A)/ Holding time (ms)
VC-3/6□-42/44 E/L E	Continuous excitation type (E)	DC / AC 110V	3 / 100	-	0.6/40
		DC / AC 125V	3 / 100	-	0.6/40
		DC / AC 220V	2 / 100	-	0.6/40
	Latch type (L)	DC 110V	5 / 100	3 / 35	-
		DC 125V	5 / 100	3 / 35	-
		DC 220V	10 / 100	6 / 35	-
	Latch type (L) (With CTD)	AC 110V	5 / 100	5 / 35	-
		AC 125V	5 / 100	5 / 35	-
		AC 220V	10 / 100	10 / 35	-
VC-12□-44 E/L E	Continuous excitation type (E)	DC / AC 110V	7 / 145	-	1.2 / 40
		DC / AC 125V	7 / 145	-	1.2 / 40
		DC / AC 220V	7 / 145	-	1.2 / 40
	Latch type (L)	DC 110V	7 / 160	3 / 40	-
		DC 125V	7 / 160	3 / 40	-
		DC 220V	7 / 160	6 / 40	-
	Latch type (L) (With CTD)	AC 110V	7 / 160	5 / 40	-
		AC 125V	7 / 160	5 / 40	-
		AC 220V	7 / 160	10 / 40	-

VI: Vacuum interrupter

- The arc generated between the contact surfaces diffuses on the plate-shaped contact to prevent the contact from being locally heated and damaged.
- The metal vapor that forms the arc condenses on the shield and the arc disappears at current zero, stopping the metal vapor to occur. The generated metal vapor quickly condenses and the contact restores insulation , enduring the recovery voltage (Transient recovery voltage).

Main circuit

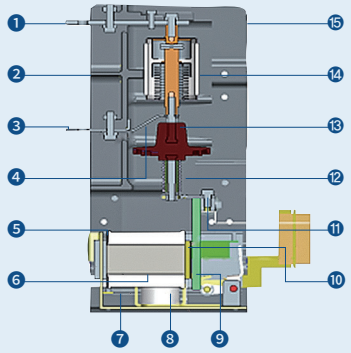

1. Upper terminal
2. Insulating mold
3. Lower terminal
4. Shunt
5. Operating coil
6. Spring for opening
7. Spring guide
8. Spring spacer
9. Operating core
10. Fixed core
11. Lever
12. Contact pressure spring
13. Insulating rod
14. Vacuum interrupter
15. Protective cover

Latch

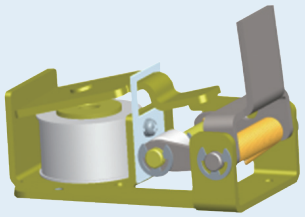

VI Internal structure

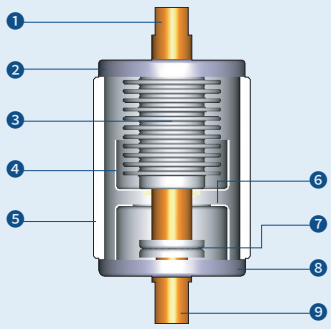

1. Operating electrode
2. Operating part's seal cup
3. Bellows
4. Bellows shield
5. Ceramic
6. Arc shield
7. Contact
8. Fixed part's seal cup
9. Fixed electrode

Auxiliary devices (Body)

3.6/7.2/12kV

Susol VC (Vacuum contactor) offers a wide range of auxiliary devices depending on your preferences. the auxiliary devices attached the VCS body will upgrade its functions.



Auxiliary devices

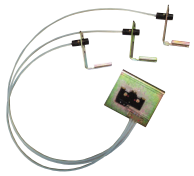
Fuse checker / Micro-switch


Potential transformer (PT)


Fuse clip

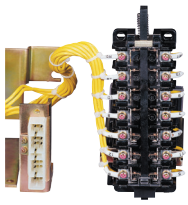
Aux switch


Padlock & door racking interlock


Push bar

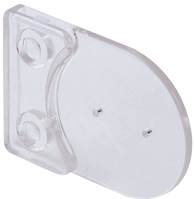
Button cover

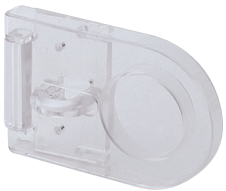
Button padlock



CTD (Condensor trip device)

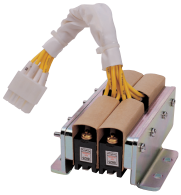
Position switch (12kV)

Note)
PT are only available for 3.6 / 7.2kV.

3.6/7.2/12kV

The auxiliary devices attached to the cradle will upgrade its function. Susol VC (Vacuum contactor) offers a wide range of auxiliary devices depending on your preference.



E-class cradle

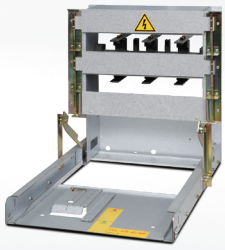

F-class cradle



G-class cradle

Auxiliary devices

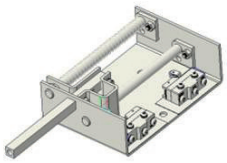

Position switch (PS1,2)

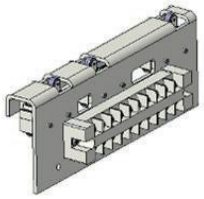

Position switch (PS3)

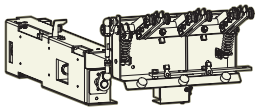

Earthing switch

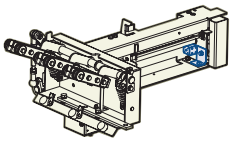

Locking magnet of the earthing switch

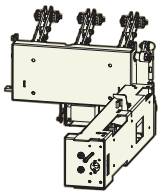

Keylock of the earthing switch

Note)
1. The position switch can be only assembled with 3.6 / 7.2kV cradles. (PS3 only with G-class cradles.)
2. The auxiliary devices related to the earthing switch can be only assembled with H-class cradles.

Auxiliary devices

Fuse checker / Micro-switch (C1~C3)

The fuse checker operates upon fusing and mechanical signals are output. The micro-switch is a part of the fuse checker that converts the mechanical signal input into the electrical signal output.

※ It is used for displaying alarm messages on fusing.

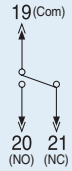

Potential transformer (PT: P1~P4)

The potential transformer is only available for the combination lever type (G). Its rating is 3.6 / 7.2kV with a capacity of 100Var or 200Var. Up to 2 units can be attached. PT supplies VCS control power and only VCS control voltage AC is available.

Rated voltage (V)	Secondary voltage (V)	Class	Burden (VA)	Frequency (Hz)
3300 / 6600	110 / 220	1	100 / 200	50 / 60

Fuse clip

The fuse clip is used to attach the fuse link to the holder or remove it from the holder.
Its size varies depending on the fuse type, so pay attention to its size.
(There is only one type (D45) for DIN type clip.)

Aux switch (J)

The auxiliary contact is either 2a2b or 3a3b.

Position switch

It is a device that shows the body position upon racking in and out. Signals are sent to the terminal block from each position using the micro-switch. Its position can be checked from remote places.
For 3.6 / 7.2kV models, the position switch are installed on the cradle and for 12kV model, it is installed on the body. (For 3.6/7.2kV P/T type, 12kV body's position S/W option is applicable.)

3.6/7.2kV

	Test Position	Service Position
Closed	2-3, 4-6, (8-9), (10-12)	1-3, 4-5, (7-9), (10-11)
Opened	1-3, 4-5, (7-9), (10-11)	2-3, 4-6, (8-9),(10-12)

Note) ( )The number inside the parenthesis is the contact number for PS 2.

12kV

Test : 1a1b, Service : 2b

	Test Position	Service Position
Closed	34-35, 36-37, 40-41	38-39
Opened	38-39	34-35, 36-37, 40-41

Test : 2a, Service : 2a

	Test Position	Service Position
Closed	34-35, 38-39	36-37, 40-41
Opened	36-37, 40-41	34-35, 38-39

Test : 1a1b, Service : 1a1b

	Test Position	Service Position
Closed	34-35, 40-41	36-37, 38-39
Opened	36-37, 38-39	34-35, 40-41

Fuse checker / Micro-switch

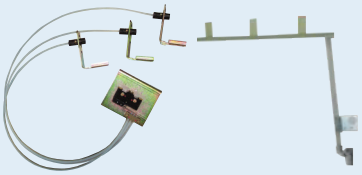

3.6 / 7.2kV 12kV

PT: Potential transformer (PT)



Fuse clip



Aux switch

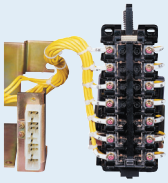

Position Switch

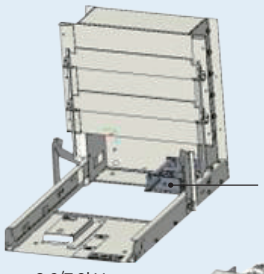

3.6/7.2kV

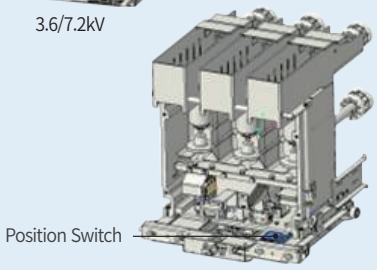

12kV

CTD (Condenser trip device: L)



For latch type AC operation, the CTD is built in so that tripping is possible within 30 seconds even under instantaneous interruption. However, after interruption, an automatic trip circuit should be arranged separately on the panel.

Rating	Specifications
Rated input voltage (V)	AC 110~220
Frequency (Hz)	50 / 60
Rated impulse voltage (V)	DC 110
Charging time	5second within
Available trip time	30second within
Input voltage regulation	85%~110%
Condenser capacity (μF)	1000

Note) The CTD is assembled on the left side of the VCS as a frontal reference. Please refer to P35 for the outer dimensions assembled in the product.

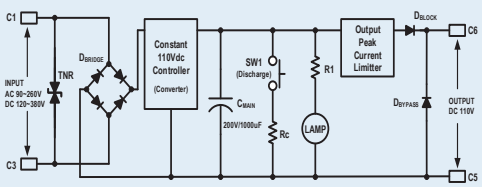

Control circuit diagram

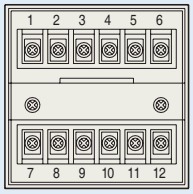

CTD terminal

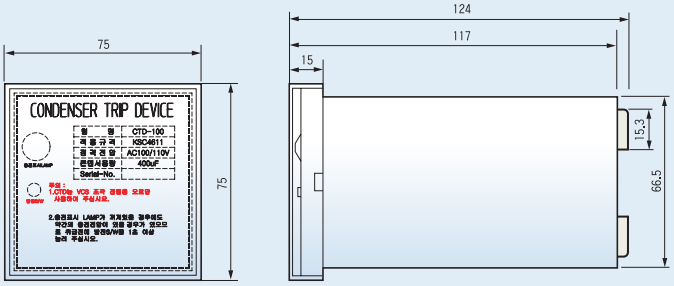

Dimensions



Fuse case

It is made of BMC for 3.6 / 7.2kV models and nylon for 12kV models. Safety has been improved with its excellent dielectric strength.

Note) Available for fuse-combined types



Counter

It is a device that mechanically displays the number of On / Off operations in 5-digit display.



Bushing

It is a mono-block bushing that is applied to lever-type cradles. It demonstrates a superb performance with its improved dielectric strength.

Note) Available for G, B, M and H-class cradles.



Test / Run position checker

Position of the body racking in and out is visually displayed on this device.

Note) Available for external racking-in/out

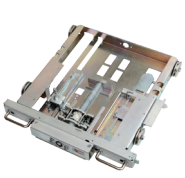

Truck for external racking-in / Out

It is a screw-type racking-out device for the user safety. It allows the user to rack in and out outside the panel. It is only available for the single lever and power fuse-combined types.

Note) Available for K and B types.



On / Off display

Power On / Off status is visually displayed.



Racking-in / Out handle

It is a refraction-type rack-in / Out handle applied to the truck for external racking-in / Out. When K or B-type VCS is used, the screws are turned for racking in and out.



Check display

The fuse appearance and state may be checked from 3.6 / 7.2kV fuse-combined types (G, B and F types).

Auxiliary devices

Padlock & door racking interlock (A)

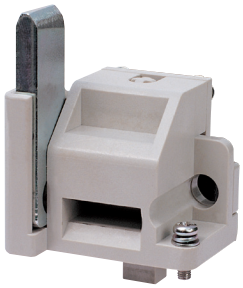

- When installing the key according to the position of the padlock on the PNL door, it is possible to perform raking-in / Out only when the door is completely closed.
- When racking-in / Out is needed with the door open, a handy lever mounted on the body's handle insertion part should be inserted to the hole at the lower section of door lock.
- There is a locking padlock device that prevents racking-in / Out at the test and service modes using a key.



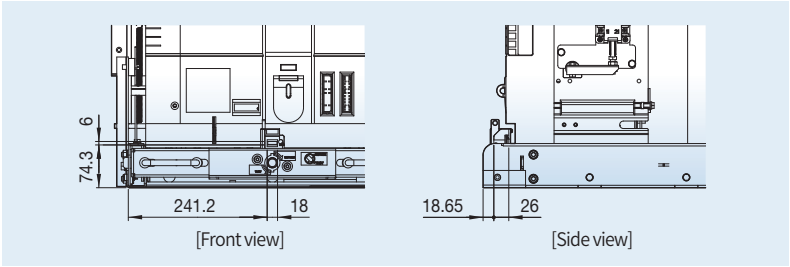

Assembly dimension (Padlock, 3.6/7.2kV)

Trip coil monitoring contact

- It is a contact that monitors the trip coil.
- The trip coil monitoring contact display terminal is connected to the trip coil monitoring relay to monitor the trip coil status.
  - When the trip coil is normal: Closed circuit
  - When the trip coil is damaged: Open circuit
    1) Monitoring the trip coil at the closing state by terminals -2 and +5
    2) Monitoring the trip coil at the trip state by terminals -2 and +3
- The coil test unit is also available for coil testing. It is parallel-connected to the trip coil operating switch.
- No power should be applied to the trip coil monitoring contact.

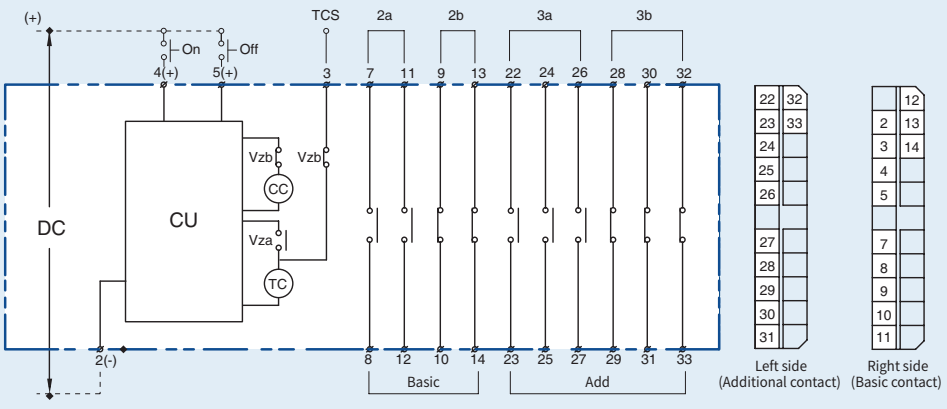

Button cover (C)

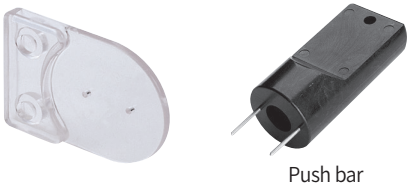

Push bar

- It is a cover that protects the On / Off button to prevent accidents that may occur during VC operation.
- Operates only with the push bar.

Button padlock (B)

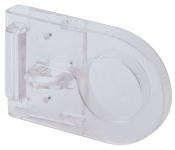

- It is a device that prevents the On / Off button be manually pushed by user's mistake.
- At the button lock mode, manual closing / Tripping is not possible.



Earthing switch

- Wiring diagram

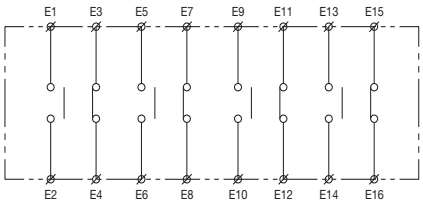

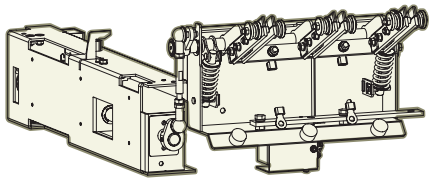

- It is a safety device to discharge the load part's charging current upon maintenance of the switchgear at the VC's test and racking-out states. It can only be installed on the earthing truck of the K and B types.

* Please refer to the User Manual for further details on operation of the earthing switch and related auxiliary devices.
*Applied standard: IEC 62271-102



Earthing switch

Auxiliary devices

Locking magnet of earthing switch (H~O)

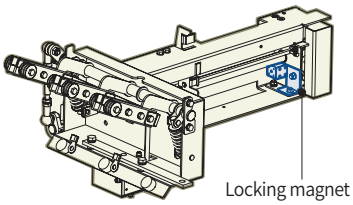



- It applies only when the earthing switch is used. It is an auxiliary device that allows the earthing switch to open and earth itself after the control power is applied to its locking magnet.
- Please check whether the control power is input or not before opening or earthing the earthing switch installed with the locking magnet.
- Applicable control voltage
  - DC 24, 48, 110, 125, 220V
  - AC 48, 110, 220V

Keylock of earthing switch

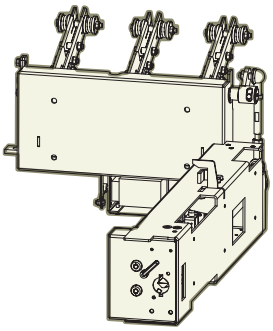



- It is a standard auxiliary device applied only when the earthing switch is used. It has two interlock functions.
  1) Interlock maintaining the open state
  2) Interlock maintaining the earthing state

Racking-in / Out operation

Lever (D, G) type

Racking in

1. Check whether the contactor is at the trip mode (Open). (Test position)
2. Lift the interlock lever and rack in about 50mm.
3. After racking in, rack in the body until it reaches the run position without lifting the interlock lever.

Racking out

1. Check whether the contactor is at the trip mode (Open). (Run position)
2. Lift the interlock lever. (The interlock will be cancelled when the lever is lifted.)
3. Rack out the body until it reaches the test position.

Cross-sectional drawing of test / Run position

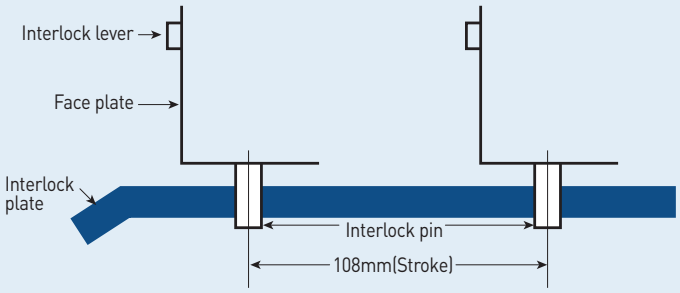

Screw (K, B) type

Racking in

1. Hold both levers at the lower section of the contactor with two hands.
2. Pull the levers and then push them forward.
3. Install the handle.
4. Turn the handle clockwise to move forward. (About 11 turns)
5. When it reaches the access point, the racking-in / Out handle idles and the contactor no longer racks in.

Racking out

1. Check whether the contactor is at the trip mode (Open). (Run position)
2. Insert the racking-in / Out handle in the handle mounting hole.
3. Turn the handle counterclockwise to rack out to the test position.
4. When it reaches the test position, the racking-in / Out handle idles.

Note) Please check the power status when racking in and out.

Test position

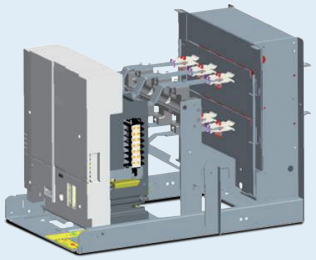

Run position

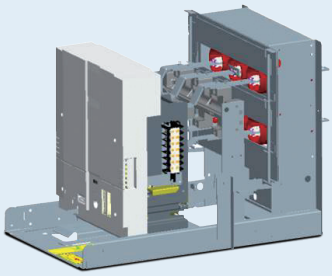

Test position

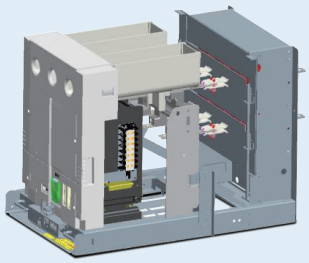

Run position

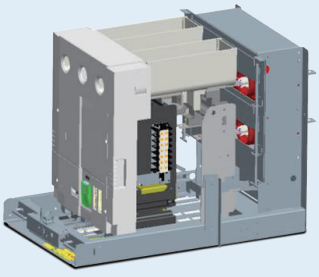

Control circuit diagram (3.6/7.2/12kV)

Continuous excitation (DC/ AC 110~220V): Fixed type

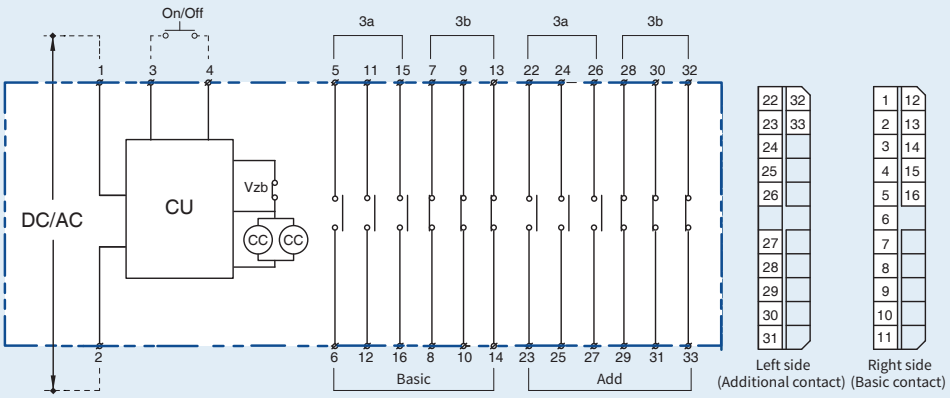

Apply power to terminals #1 and #2.
Make and break using #3 and #4 terminal contacts.

Do not perform insulation testing on power supply terminals.
Continuously fixed: 1, 2, 3 and 4

Latch type (DC 110~220V): Fixed type

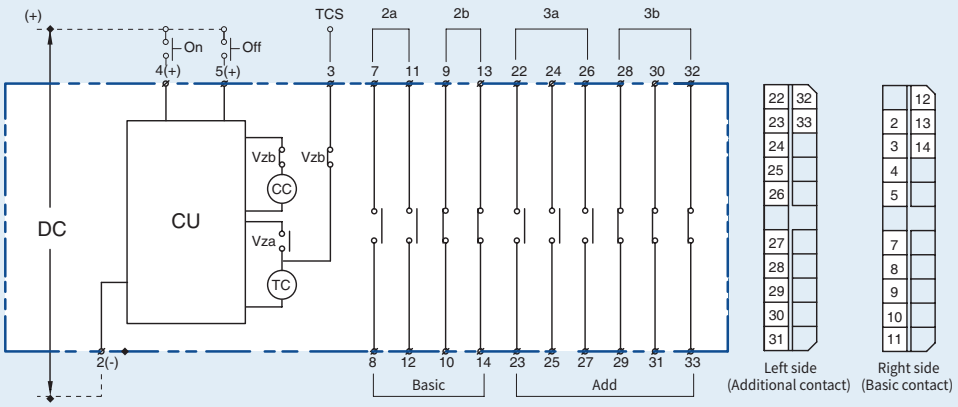

When closing: Make and break using terminals #4(+) and #2(-).
When tripping: Make and break using terminals #5(+) and #2(-).

Do not perform insulation testing on power supply terminals.
Instantaneously (latch) fixed: 2, 4 and 5

Do not apply power to the TCS line.

Latch type CTD (AC 110~220V): Fixed type

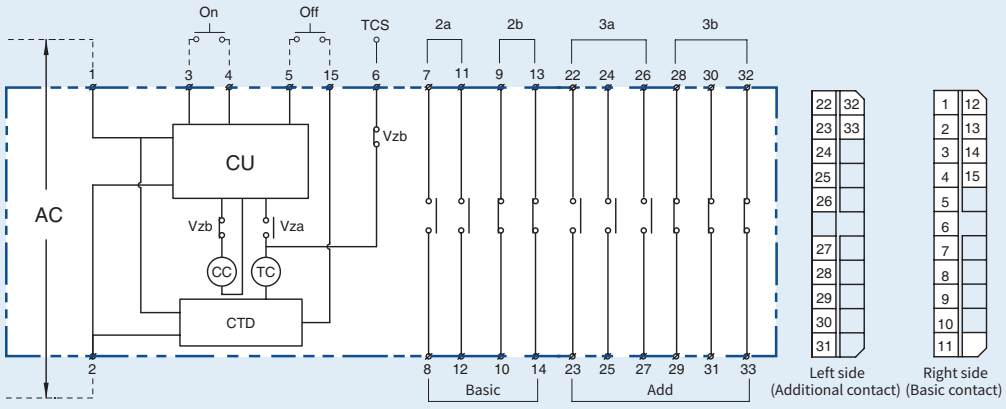

Apply power to terminals #1 and #2.
When closing): Make and break using #3 and #4 terminal contacts.
When tripping): Make and break using #5 and #15 terminal contacts.

Do not perform insulation testing on power supply terminals.
Instantaneous CTD: 1, 2, 3, 4, 5 and 15
Do not apply power to the TCS line.

Continuous excitation (DC / AC 110~220V): Lever type

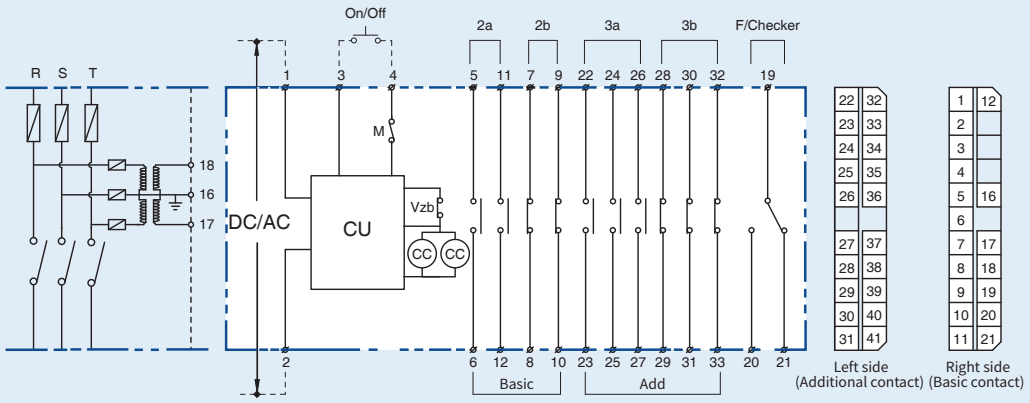

Apply power to terminals #1 and #2.
Make and break using #3 and #4 terminal contacts.

Do not perform insulation testing on power supply terminals.
Continuous: 1, 2, 3 and 4

The additional contact housing's No.34~41
is 12kV Position Switch Numbers.

Latch type (DC 110~220V): Lever type

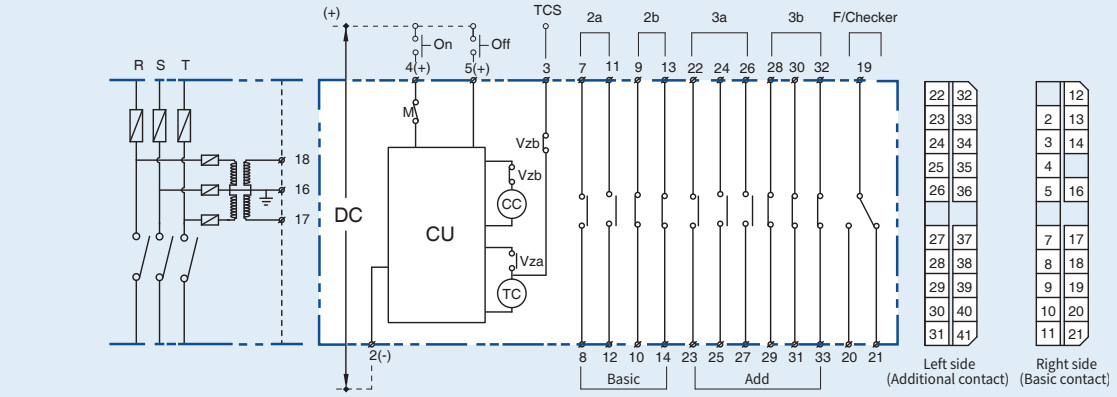

When closing: Make and break using terminals #4(+) and #2(-).
When tripping: Make and break using terminals #5(+) and #2(-).

Do not perform insulation testing on power supply terminals.
Instantaneous (latch): 2, 4 and 5

Do not apply power to the TCS line.
The additional contact housing's No.34~41
is 12kV Position Switch numbers.

Latch type CTD (AC 110~220V)

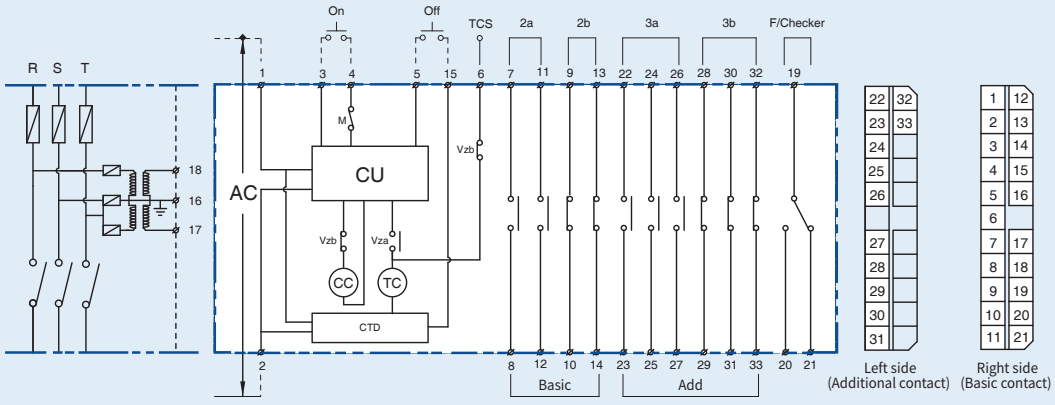

Apply power to terminals #1 and #2.
When closing): Make and break using #3 and #4 terminal contacts.
When tripping): Make and break using #5 and #15 terminal contacts.

Do not perform insulation testing on power supply terminals.
Instantaneous CTD: 1, 2, 3, 4, 5 and 15
Do not apply power to the TCS line.

Control circuit diagram (3.6/7.2kV mechanical interlock type)

Continuous excitation (DC/AC 110~220V): Fixed type

VC1

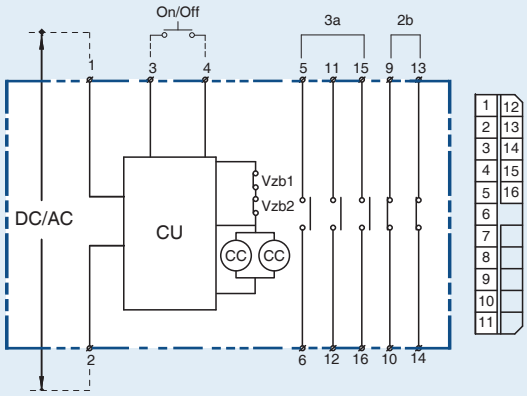

VC2

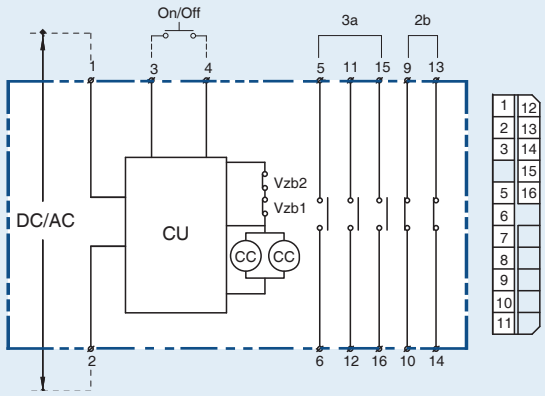

Latch type (DC 110~220V): Fixed type

VC1

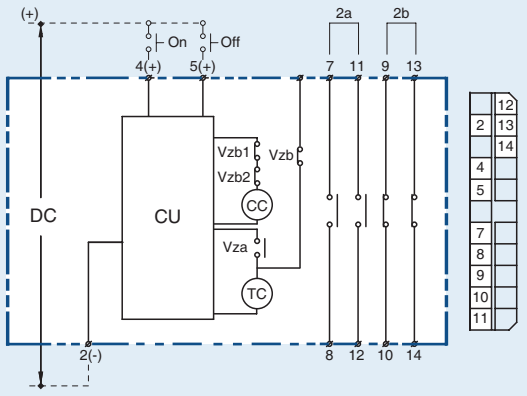

VC2

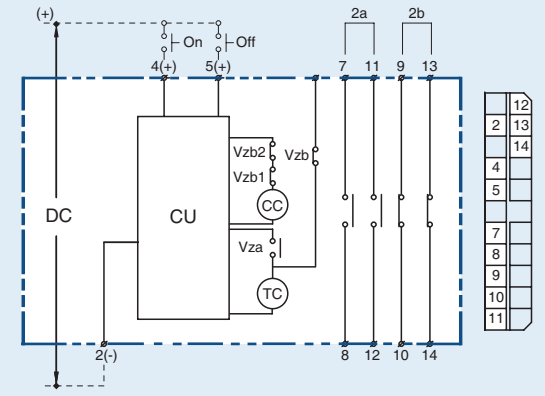

Latch type CTD(AC 110~220V): Fixed type

VC1	VC2
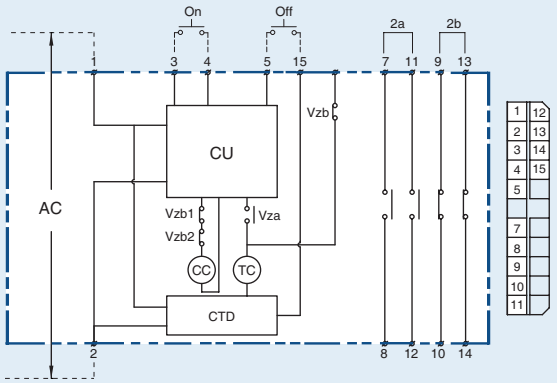	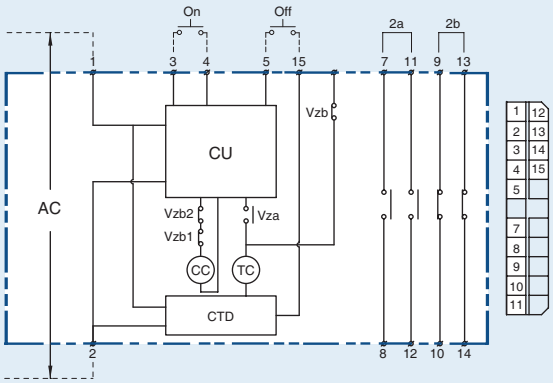

Outside drawing on mechanical interlock type

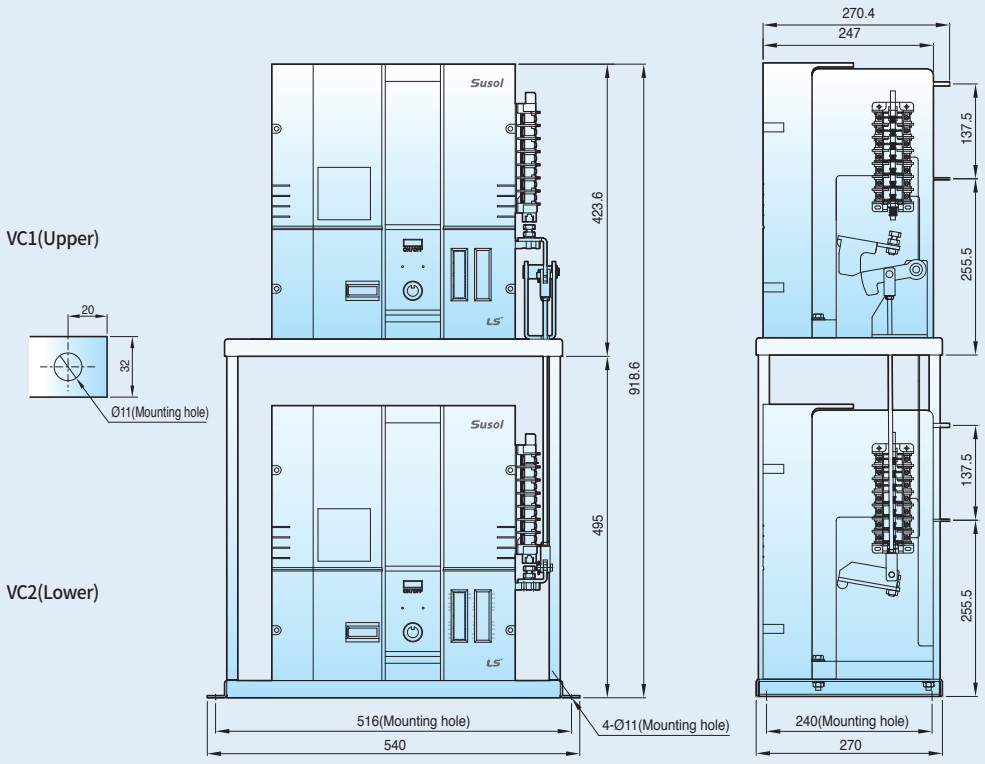

3.6/7.2kV body–dimensions

Fixed type

(Unit: mm)

VC-3/6Z-42/44E/LE

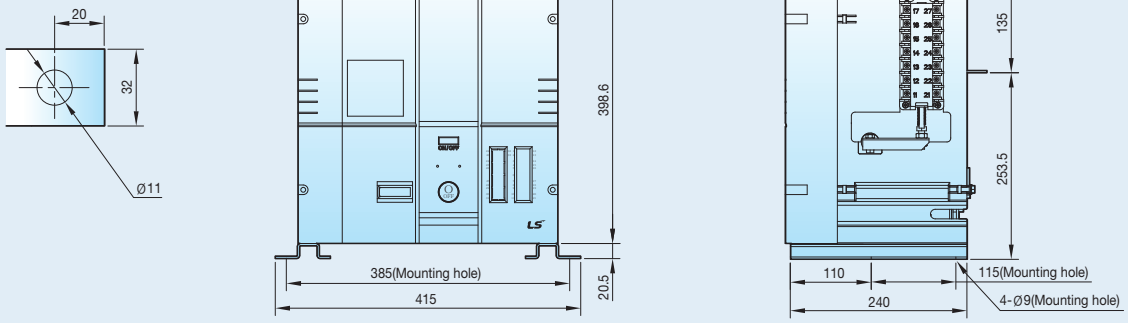

Non-fuse lever type

(Unit: mm)

VC-3/6D-42/44E/LE

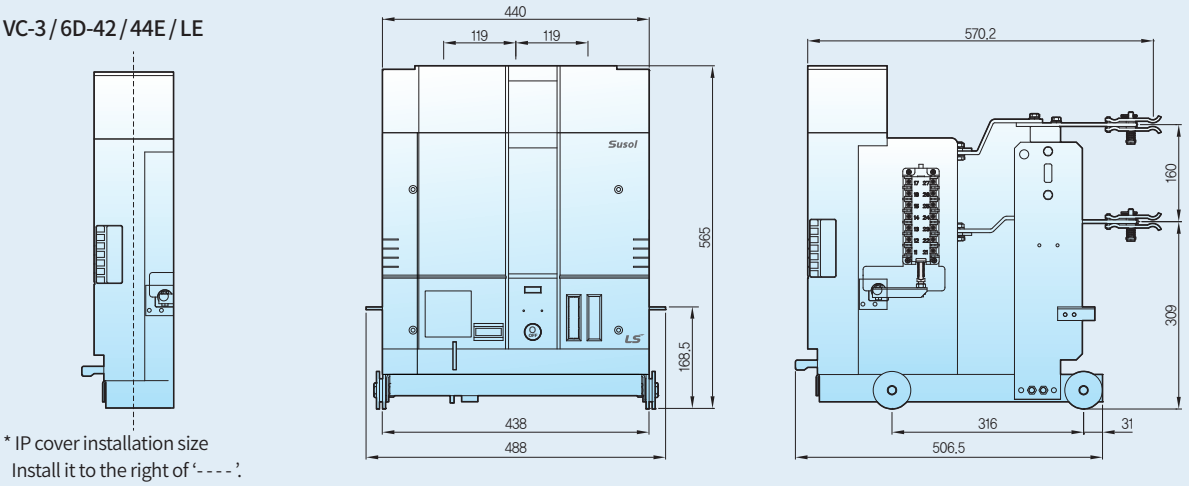

* IP cover installation size
Install it to the right of '- - - - '.

Non-fuse screw type

(Unit: mm)

VC-3/6K-42/44E/LE

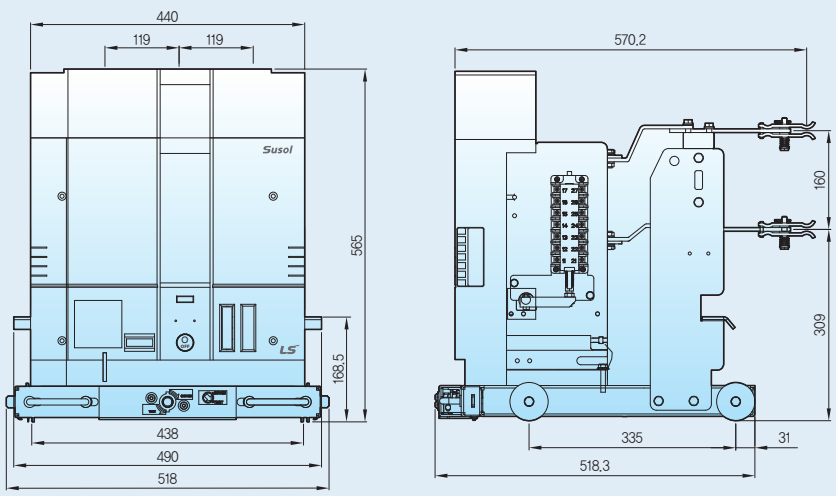

Fuse-combined (Combination) fixed type

(Unit: mm)

VC-3 / 6F-42 / 44E / LE

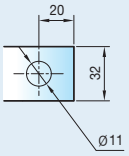

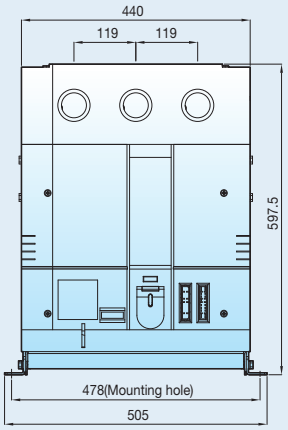

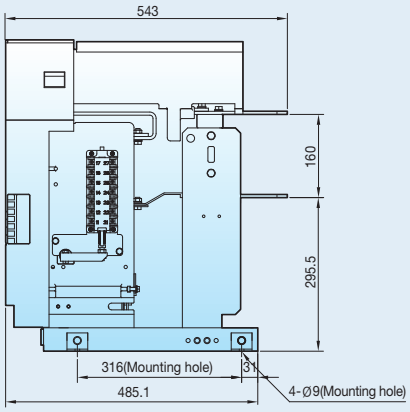

* When 6M- 300/400 Fuse is applied, change from 543mm to 613mm.

Fuse-combined (Combination) lever type

(Unit: mm)

VC-3 / 6G-42 / 44E / LE

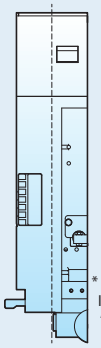

* IP cover installation size Install it to the right of '----'.

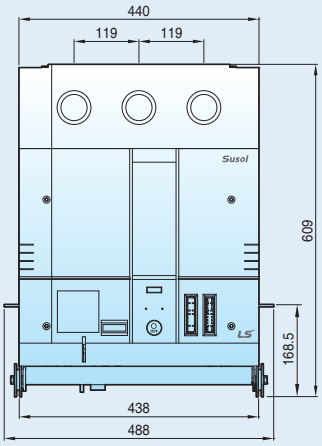

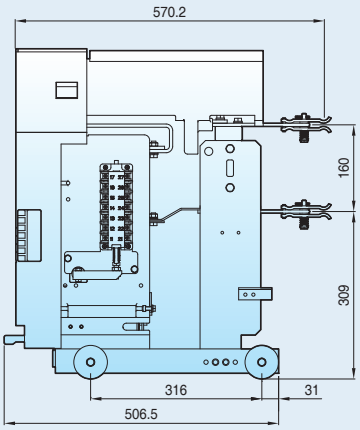

* When 6M- 300/400 is applied, change from 570.2mm to 640.2mm.

Fuse-combined (Combination) screw type

(Unit: mm)

VC-3 / 6B-42 / 44E / LE

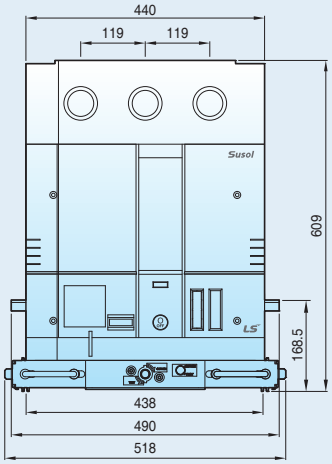

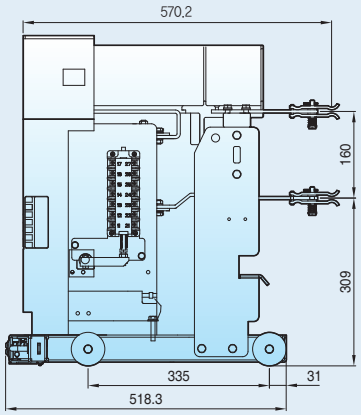

* When 6M- 300 / 400 Fuse is applied, change from 570.2mm to 640.2mm.

3.6/7.2kV cradle–dimensions

E-class cradle type (Non-fuse lever type)

(Unit: mm)

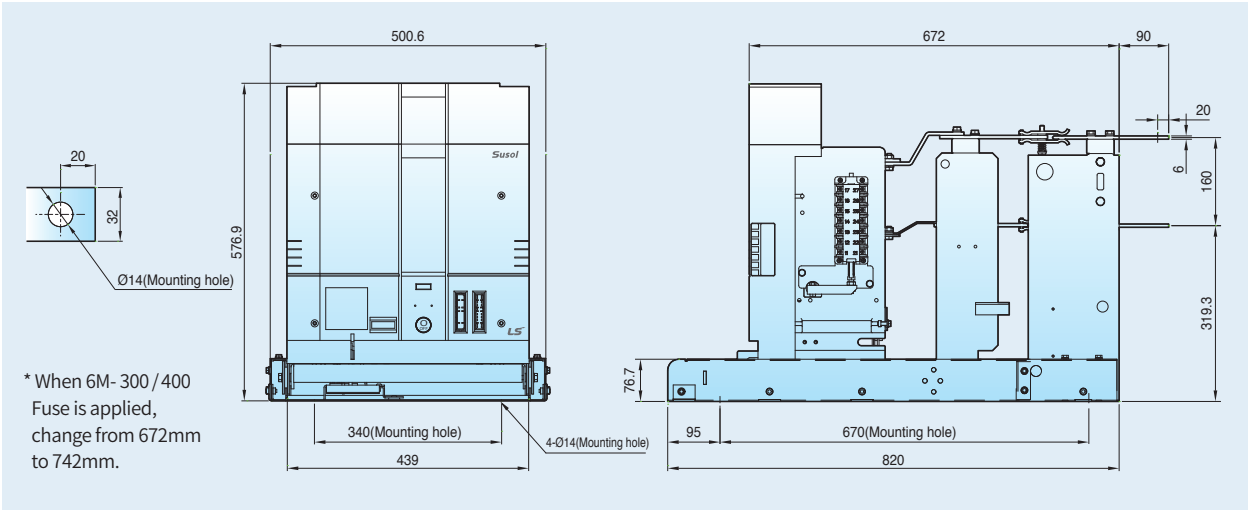

* When 6M- 300 / 400 Fuse is applied, change from 672mm to 742mm.

B-class cradle type (Non-fuse screw type)

(Unit: mm)

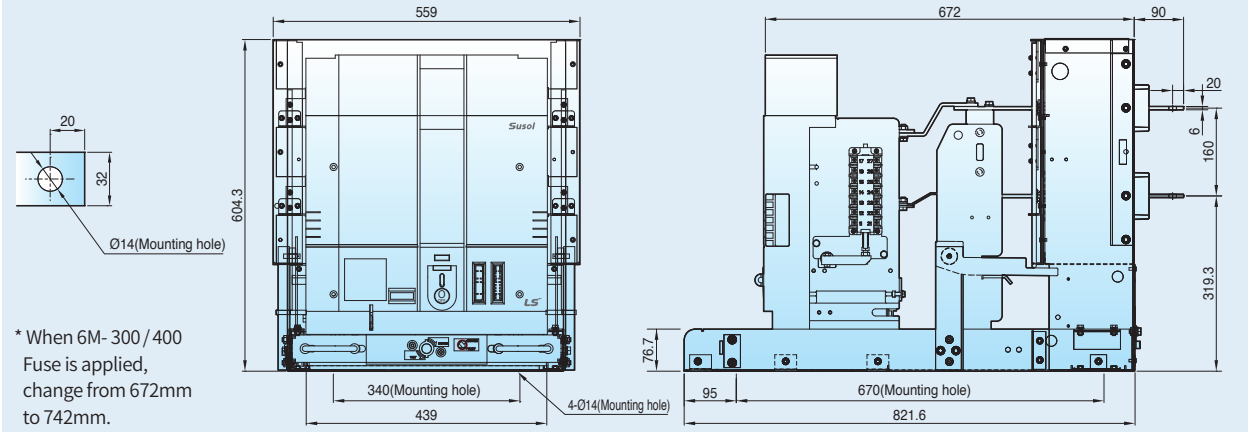

* When 6M- 300 / 400 Fuse is applied, change from 672mm to 742mm.

F-class cradle type (Non-fuse lever type)

(Unit: mm)

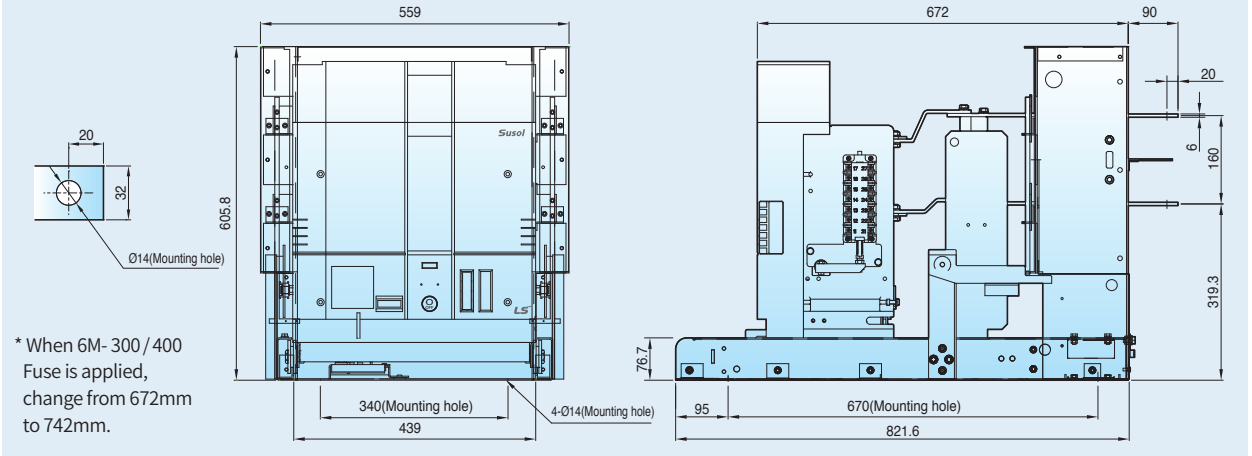

* When 6M- 300 / 400 Fuse is applied, change from 672mm to 742mm.

G-class cradle type (Non-fuse lever type)

(Unit: mm)

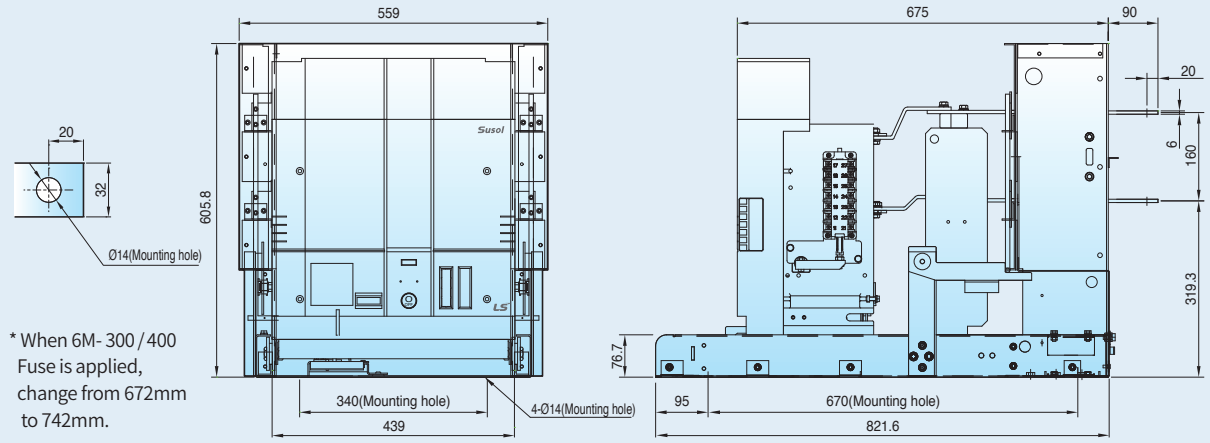

* When 6M- 300 / 400 Fuse is applied, change from 672mm to 742mm.

H-class cradle type (Non-fuse screw type)

(Unit: mm)

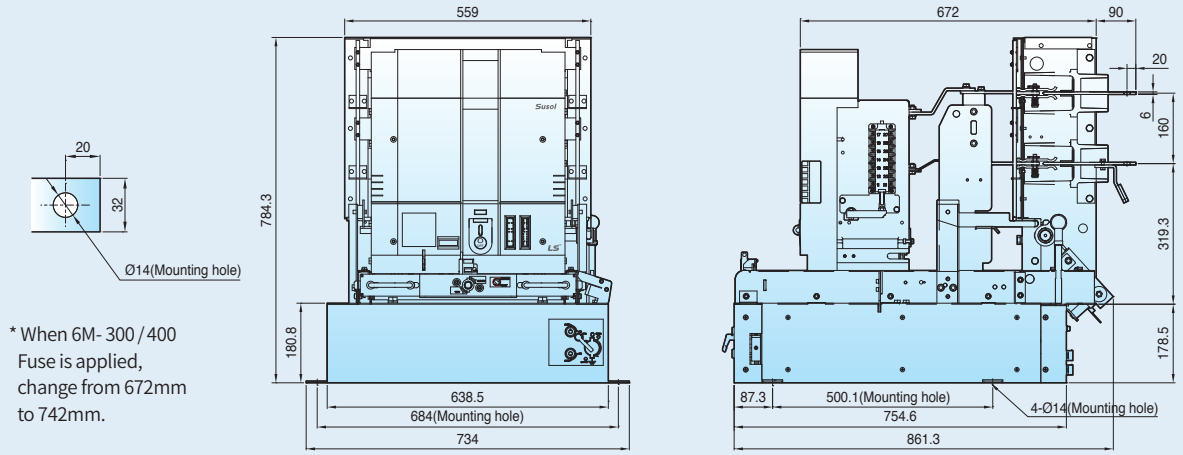

* When 6M- 300 / 400 Fuse is applied, change from 672mm to 742mm.

Phase-to-phase 150mm pull-out type (P, T type)

(Unit: mm)

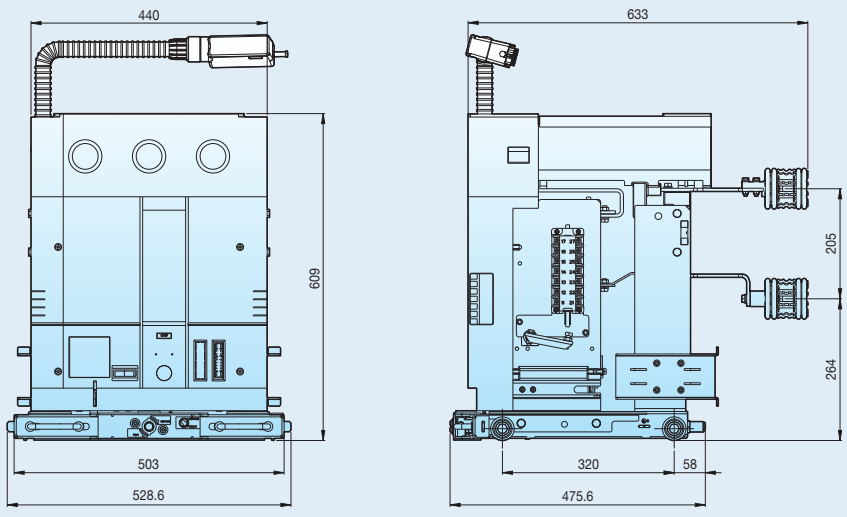

Note)
If 3.6/7.2kV P/T type body with option P, the pin plug type lead wire is applicable.

3.6/7.2kV cradle–dimensions

E-class cradle type (Combination lever type)

(Unit: mm)

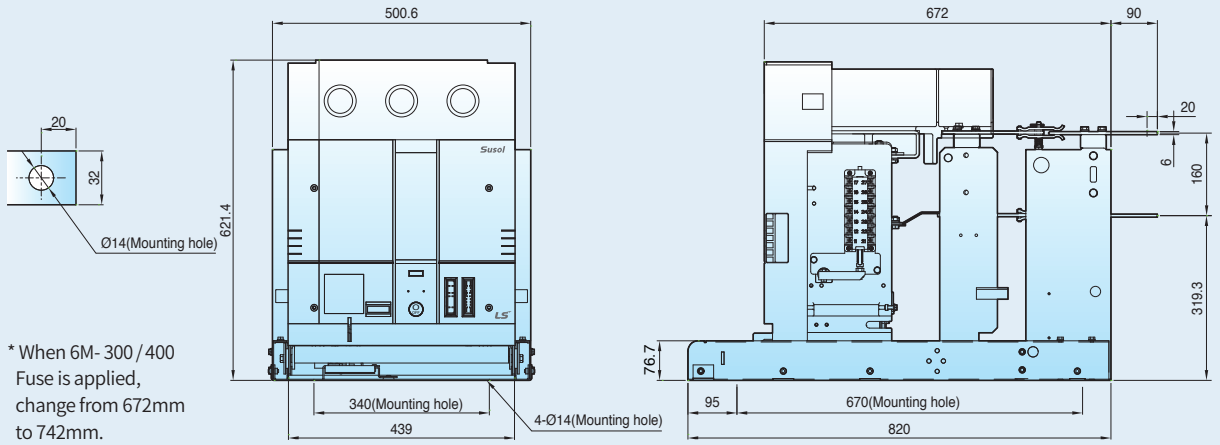

* When 6M- 300 / 400 Fuse is applied, change from 672mm to 742mm.

B-class cradle type (Combination screw type)

(Unit: mm)

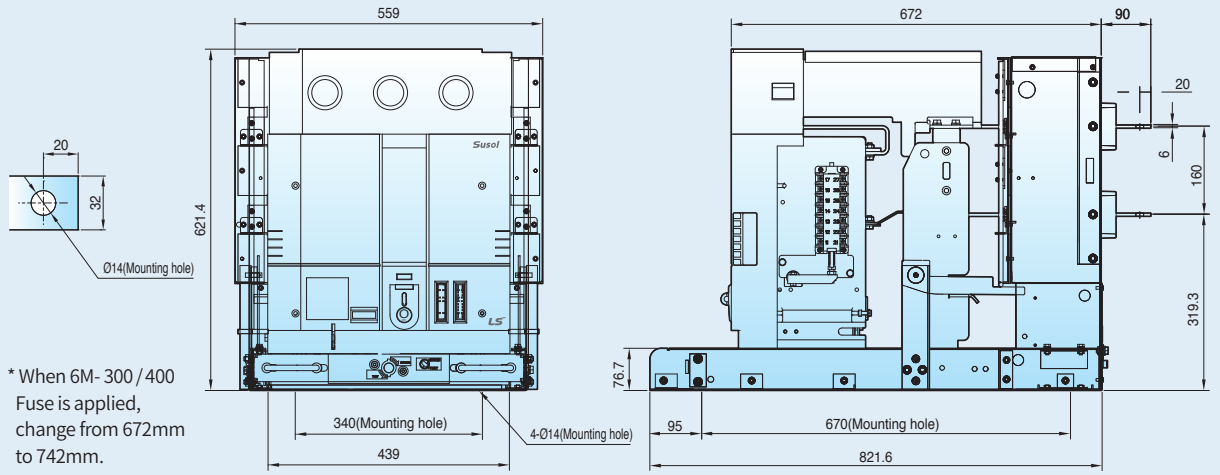

* When 6M- 300 / 400 Fuse is applied, change from 672mm to 742mm.

F-class cradle type (Combination lever type)

(Unit: mm)

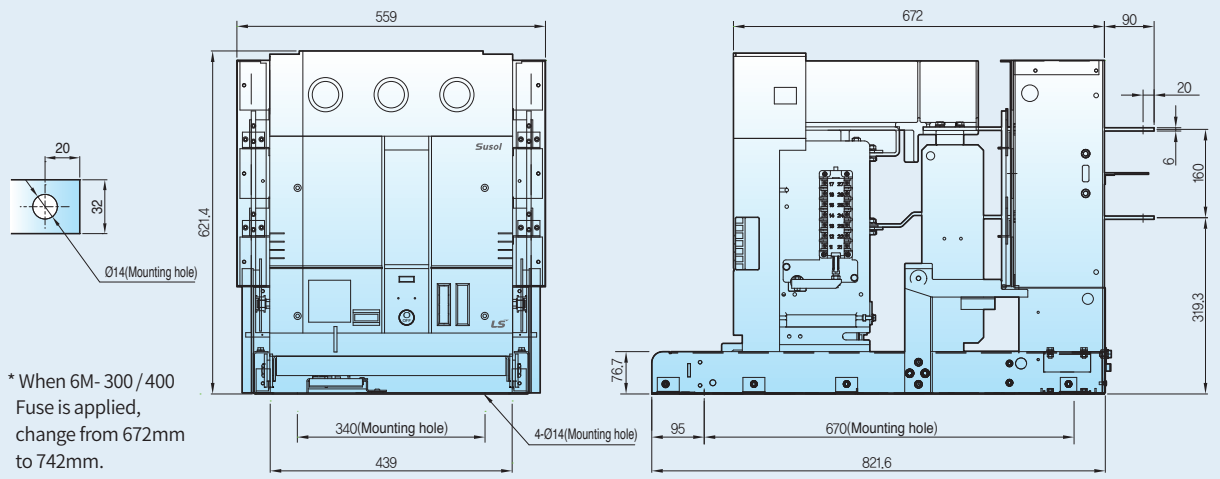

* When 6M- 300 / 400 Fuse is applied, change from 672mm to 742mm.

G-class cradle type (Combination lever type)

(Unit: mm)

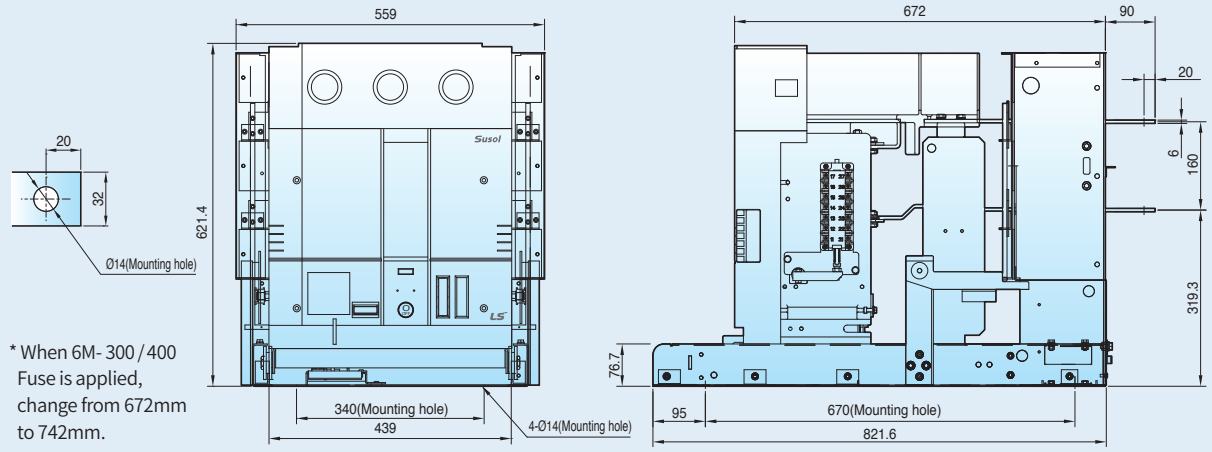

* When 6M- 300 / 400 Fuse is applied, change from 672mm to 742mm.

H-class cradle type (Combination screw type)

(Unit: mm)

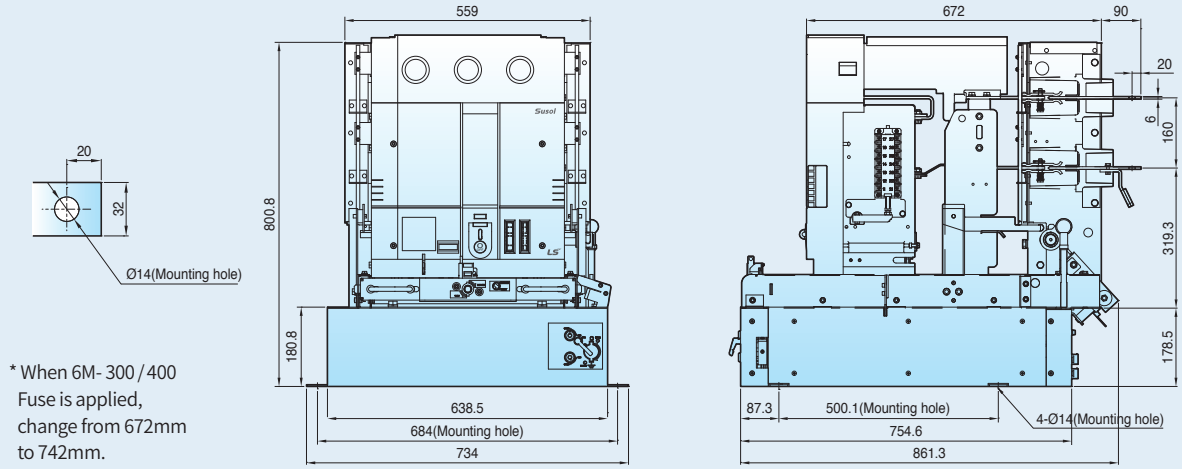

* When 6M- 300 / 400 Fuse is applied, change from 672mm to 742mm.

CTD Dimension when attached with option

(Unit: mm)

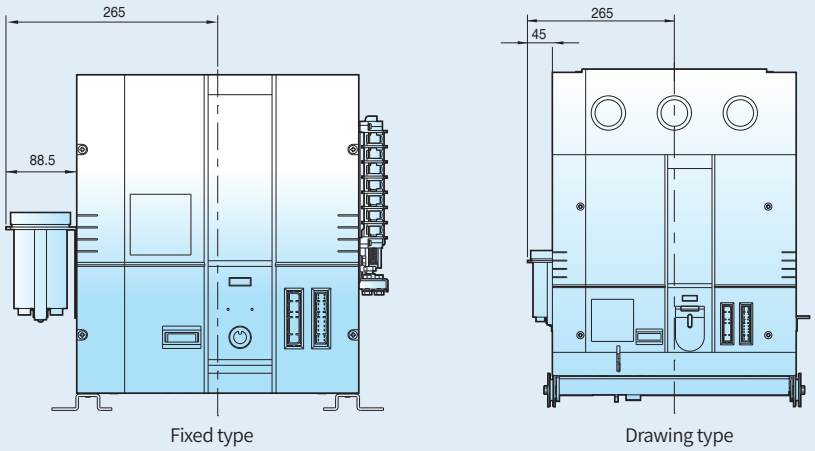

Fixed type

Drawing type

12kV body–dimensions

Fixed type

(Unit: mm)

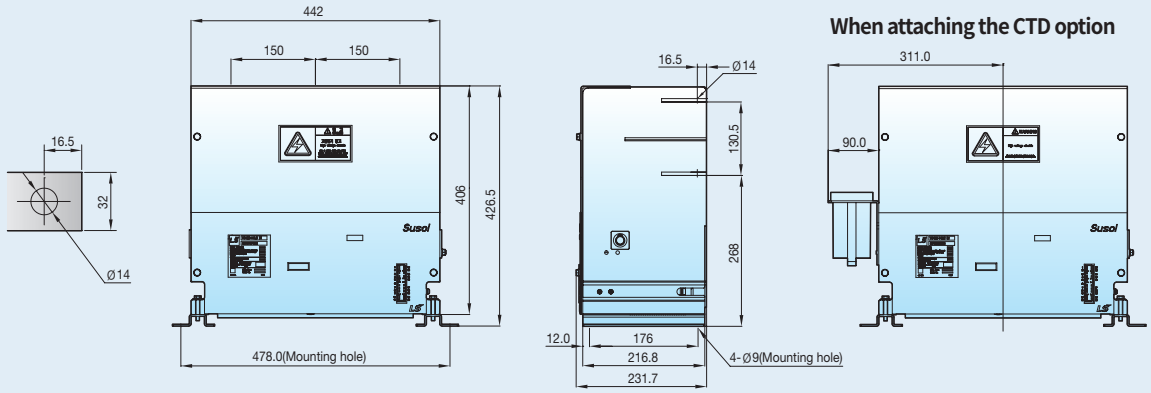

Non-fuse screw type

(Unit: mm)

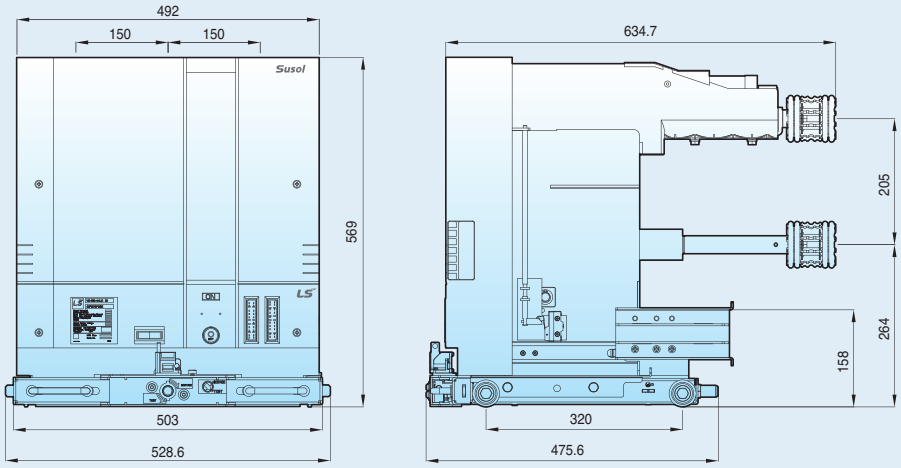

Fuse-combined (Combination) screw type

(Unit: mm)

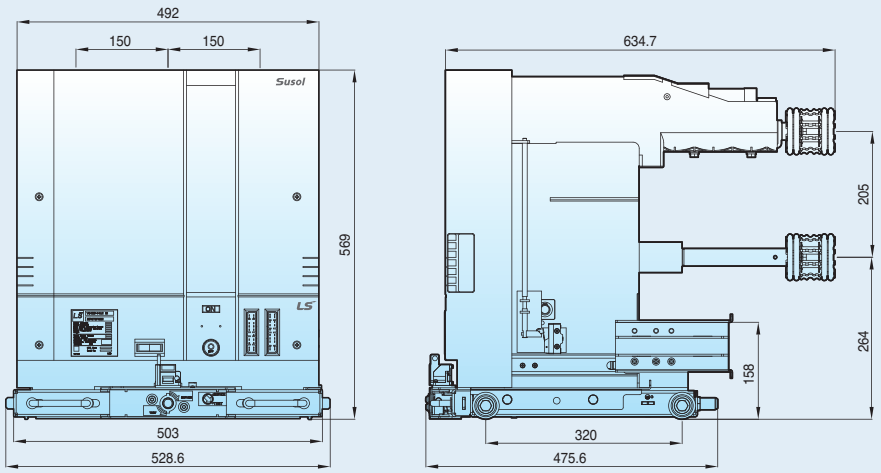

12kV cradle-dimensions

M-class cradle type (Combination screw type)

(Unit: mm)

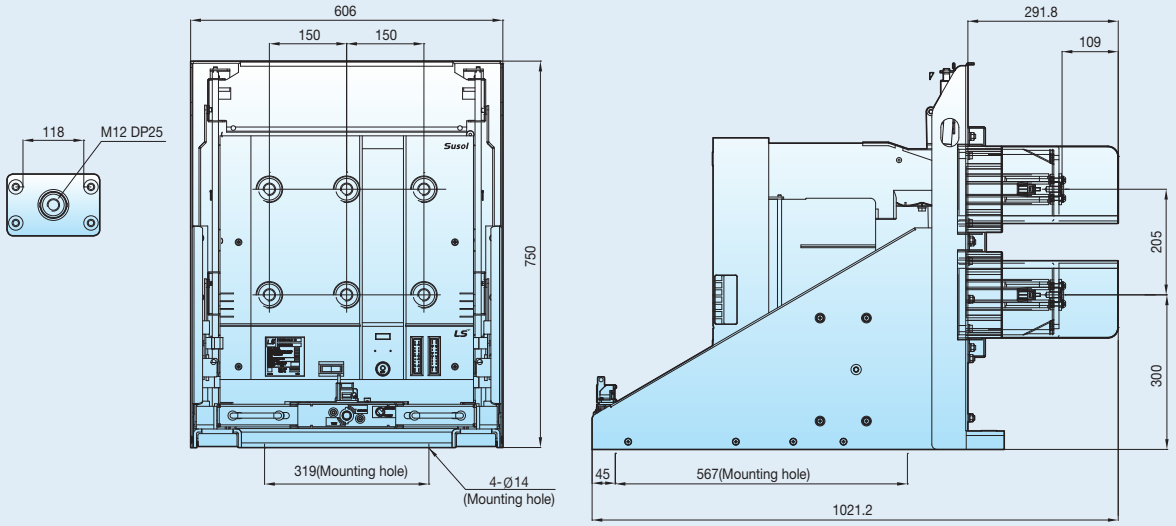

H-class cradle type

(Unit: mm)

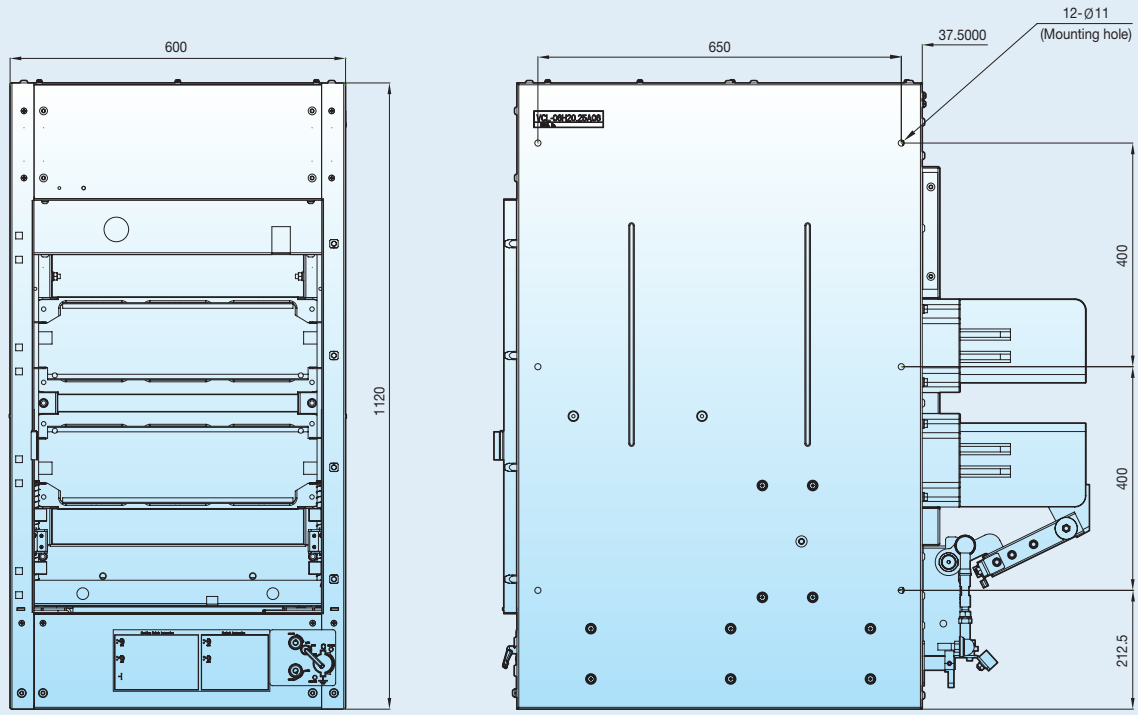

Rated current calibration based on the ambient temperature

When the ambient temperature exceeds the normal setting temperature, the equation below may be used to estimate the applicable current value.

$$Ia = Ir(\Theta max - \Theta a) / \Theta r)^{1/2}$$

Ia : Allowable, constant transport current at the actual ambient temperature θa
Ir : Rated current at the ambient temperature 40°C
Θmax : Total temperature at the available hottest spot
Θa : Ambient temperature expected at -30°C and 60°C
Θr : Allowable temperature at the hottest spot from rated current

Ex) Estimating the load current that may be applied at the contactor (Rated current: 400A)'s ambient temperature 55°C
Ia = 400×((105-55)/65)1/2 = 400×0.87=351A

Applicable load current according to changes in the ambient temperature

Rated current (A)	Ambient temperature (°C)								
	20	25	30	35	40	45	50	55	60
400	400	400	400	400	400	384	368	351	333
200	200	200	200	200	200	192	184	175	166

Applicable load current according to changes in the ambient temperature

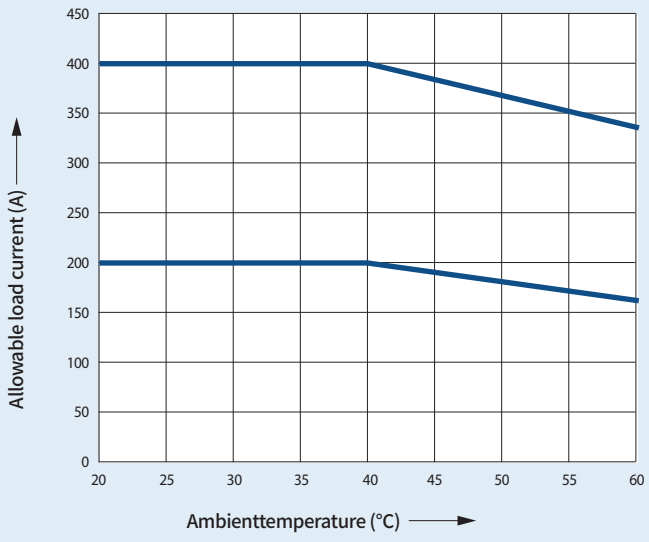

Current limiting power fuse (PF)

LS current limiting PF is used to protect circuits and electric power systems from fault current.
It is used to protect condenser circuits, motor circuits, transformers and cables.
* LS Current limiting PF applied for 3.6 / 7.2kV models is KS-certified.

Precautions for use

- PF should be used for short-circuit protection.
- PF cannot be re-closed after it operates.
- Establish an appropriate level of rated current so that transient current does not operate or degrade the PF.
- The PF operating characteristics are fixed, so the most suitable PF should be chosen considering its use and circuit characteristics.
- Protection coordination with other devices should be established for protection at the minimum breaking current or below.
- All phases should be replaced when fused.

Selection by power fuse usage

1. PF for transformer

- Select PF with the appropriate level of rated current considering the PF deterioration caused by the transformer's allowable overload.
- Make sure that the transformer's magnetizing inrush current-time is within the PF's permissible time-current characteristics. Rated current of PF for transformer ≥ Transformer's rated current
- For collective protection of two or more transformers:
- After setting the maximum rated current for each phase, PF with the maximum rated current is applied to all 3 phases.
- Secondary short-circuit of transformer PF's minimum breaking current < Current at the primary short-circuit
- PF for potential transformer (PT)
- PF for PT is selected to prevent transformer breakdown, or for the primary short-circuit protection without considering the secondary short-circuit protection.
- Make sure that the operating characteristic of PF is below the over-current characteristic of protected devices and circuits.
- Make sure that it is smaller than the electromagnetic force based on PF's current limit and the short-circuit strength of circuits or devices based on operation 12t.

2. PF for motor

- Select PF with an appropriate level of rated current considering the PF deterioration caused by the motor's starting current.
- Make sure that the starting current-time characteristic is within the PF's permissible time-current characteristics. (Rated current of PF for motor ≥ Motor's full load current
- The intersection point of the PF's permissible time-current characteristic and contactor's operating characteristic should be above the minimum breaking current of PF, and the intersection point of the PF's operating characteristic and contactor's minimum operating (contact parting) characteristic should be below the rated breaking current of contactor.
- Check protection coordination of PF-contactor.ad.

3. PF for condenser

- Select PF with an appropriate rating considering the PF deterioration caused by the condenser's allowable overload.
- Make sure that the condenser's inrush current-time is within the PF's permissible time- current characteristic. Rated current of PF for condenser ≥ Condenser's rated current.
- When there is a shunt capacitor, the PF that is capable of enduring the inrush current from the capacitor upon closing should be chosen.

KS certificate

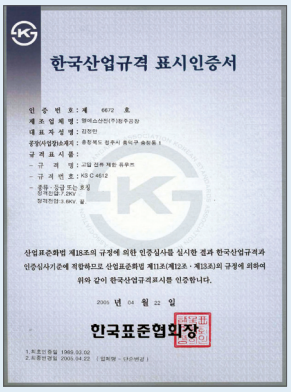

Power fuse for transformer



Power fuse for motor



List of current limiting PFs

Selection criteria & precautions for use

Selection criteria on transformer protection

1. Inrush current that is 10 times the rating may be applied for 0.1 sec.
2. Current that is 1.5 times the transformer's rating may be continuously applied. Here, the *list shows current that is 1.3 times.
3. Breaking of the current that is 25 times of the transformer's rated current is possible within 2 seconds.

Selection criteria on motor protection

1. Starting current that is 5 times the rated current may be applied for 10 seconds.
2. A separate relay is needed for short-circuit protection in coordination with VC.

Selection criteria on condenser protection

1. Inrush current that is 71 times the rating may be applied for 0.002 sec.
2. Current that is 1.43 times the condenser's rating may be continuously applied.
3. A list of M-type PFs is applied when repeated breaking-making is 1,000 times or more.

※( ): The value in the parenthesis is for the 7.2kV model.

The conditions described above are based on the KS standard, and may change according to load conditions.



G-type PF	Applied / Model name	Rated voltage (kV)	Rated current (A)	Rated breaking current (kA)	Minimum breaking current (A)
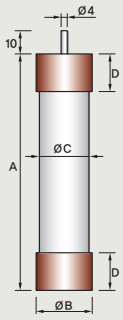 KS size	LFL - 3 / 6G - 5	3.6 (7.2)	5	40	5In
	LFL - 3 / 6G - 10		10		
	LFL - 3 / 6G - 20		20		
	LFL - 3 / 6G - 30		30		
	LFL - 3 / 6G - 40		40		
	LFL - 3 / 6G - 50		50		
	LFL - 3 / 6G - 60		60		
	LFL - 3 / 6G - 75		75	40	5In
	LFL - 3 / 6G - 100		100		
	LFL - 3G - 150	3.6	150		
	LFL - 3G - 200		200		
	LFL - 3G - 300		300	40	5In
	LFL - 3G - 400		400		
	LFL - 6G - 150	7.2	150		
	LFL - 6G - 200		200		
	LFL - 6G - 300		300	40	5In
	LFL - 6G - 400		400		
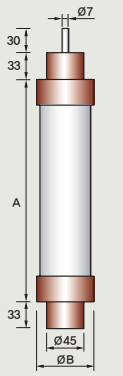 DIN size	LFL - 3 / 6G - 5B	3.6 (7.2)	5	40	4In
	LFL - 3 / 6G - 10B		10		
	LFL - 3 / 6G - 20B		20		
	LFL - 3 / 6G - 30B		30		
	LFL - 3 / 6G - 40B		40		
	LFL - 3 / 6G - 50B		50		
	LFL - 3 / 6G - 60B		63		
	LFL - 3 / 6G - 75B		75		
	LFL - 3 / 6G - 100B		100		
	LFL - 3 / 6G - 125B		125		
	LFL - 3G - 160B	3.6	160	40	4In
	LFL - 3G - 200B		200		
	LFL - 6G - 160B	7.2	160		
	LFL - 6G - 200B		200		

※( )The number in the parenthesis is for the 7.2kV model.
G-type PFs may be applied for motor load, but M-type PFs are recommended for use.

M-type PF	Applied / Model name	Rated voltage (kV)	Rated current (A)	Rated breaking current (kA)	Minimum breaking current (A)
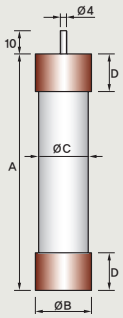 KS size	LFL - 3M - 20	3.6	20	40	7In
	LFL - 3M - 50		50		
	LFL - 3M - 100		100		
	LFL - 3M - 150		150		
	LFL - 3M - 200		200		
	LFL - 3M - 300		300		
	LFL - 3M - 400		400		
	LFL - 6M - 20	7.2	20	40	7In
	LFL - 6M - 50		50		
	LFL - 6M - 100		100		
	LFL - 6M - 150		150		
	LFL - 6M - 200		200		
	LFL - 6M - 300		300		
	LFL - 6M - 400		400		

Transformer load (kVA)		Condenser load (kVA)	Dimensions (mm)				Applied holder
Single-phase	Three-phase	Three-phase	A	B	C	D	
- ※(5or under)	15or under ※(15or under)	- ※(-)	261	50	47	25	LFH-6G-D60
10or under (15or under)	15or under (30or under)	10or under (25or under)					
20or under (50or under)	30or under (75or under)	30or under (50or under)					
30or under (75or under)	75or under (150or under)	50or under (100or under)					
50or under (100or under)	100or under (200or under)	75or under (150or under)					
75or under (150or under)	150or under (300or under)	100or under (200or under)					
- (-)	- (-)	- (-)					
150or under (200or under)	200or under (400or under)	200or under (400or under)	311	60	57	30	LFH-6G-D1H
200or under (400or under)	375or under (750or under)	300or under (600or under)					
300or under (-)	500or under (-)	400or under (-)					
400or under (-)	750or under (-)	600or under (-)					
625or under (-)	1,000or under (-)	1,000or under (-)	311	77	73	43	LFH-6G-D2H
750or under (-)	1,500or under (-)	- (-)					
- (500or under)	- (1,000or under)	- (800or under)					
- (750or under)	- (1,500or under)	- (1,200or under)					
- (1,250or under)	- (2,000or under)	- (-)	350	110	108	55	LFH-6G-D4H
- (-)	- (2,500or under)	- (-)					
4 ~ 8 ※(8 ~ 16)	6.7 ~ 14 ※(13 ~ 28)	9.8or under ※(9.8or under)	195	55	-	-	LFH-6G-D1HB
6 ~ 13(13 ~ 25)	11 ~ 22(21 ~ 44)	9.8 ~ 12(19 ~ 24)					
15 ~ 31(30 ~ 62)	25 ~ 53(51 ~ 107)	12 ~ 31(24 ~ 61)					
21 ~ 42(40 ~ 84)	35 ~ 73(70 ~ 145)	31 ~ 46(61 ~ 92)					
40 ~ 82(80 ~ 165)	69 ~ 143(137 ~ 286)	46 ~ 64(92 ~ 128)					
49 ~ 102(98 ~ 204)	85 ~ 117(170 ~ 354)	64 ~ 81(128 ~ 163)					
66 ~ 137(132 ~ 275)	114 ~ 238(229 ~ 476)	181 ~ 105(163~ 210)	192	77	-	-	
68 ~ 165(134 ~ 330)	117 ~ 285(233 ~ 571)	105 ~ 150(210 ~ 300)					
128 ~ 220(256 ~ 440)	222 ~ 381(443 ~ 762)	150 ~ 222(300 ~ 445)					
151 ~ 275(302 ~ 550)	261 ~ 476(522~ 952)	222 ~ 275(445~ 550)	292	77	-	-	LFH-6G-D2HB
211 ~ 352(-)	365~610(-)	275 ~ 370(-)					
265 ~ 440(-)	495 ~ 762(-)	370 ~ 550(-)					
- (425 ~ 704)	- (735 ~1,220)	- (550 ~ 742)					
- (437 ~ 880)	- *(755 ~1,520)	- (742 ~1,000)					

Motor load(kW)	Condenser load (kVA)	Dimensions (mm)				Applied holder
Three-phase	Three-phase	A	B	C	D	
37 ~ 75	50or under	200	60	58	30	LFH-3M-100
90 ~ 200	150or under					
220 ~ 400	300or under					
450 ~ 630	400or under	200	77	73	43	LFH-3M-200
710 ~ 800	800or under					
900 ~ 1,250	1,000or under	250	87	84	50	LFH-3M-400
1,500	-					
75 ~ 160	100or under	311	60	58	30	LFH-6M-50
185 ~ 400	300or under					
450 ~ 800	600or under	350	77	73	43	LFH-6M-200
900 ~ 1,250	800or under					
1,500	-					
2,500	-	450	87	84	50	LFH-6M-400
3,000	-					

Protection coordination

Current-time relation of PF for motor protection

- Motor's full load current (①) ≤ PF's rated current (②)
- The operating characteristic of VC (ⓑ) should be under (on the left) the motor's load characteristic (ⓒ).
- The 'A' point should be on the right side of the PF's minimum breaking current (④) and the 'B' point should be on the left side of the VC's rated breaking current (⑤).

Note) The current range larger than the 'B' point is protected by PF.

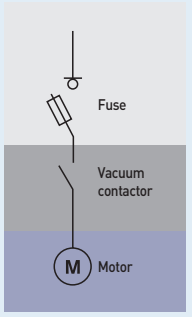

① Motor's full load current
② PF's rated current
③ Motor's starting current
④ PF's minimum breaking current
⑤ VC's rated breaking current
⑥ Short-circuit current

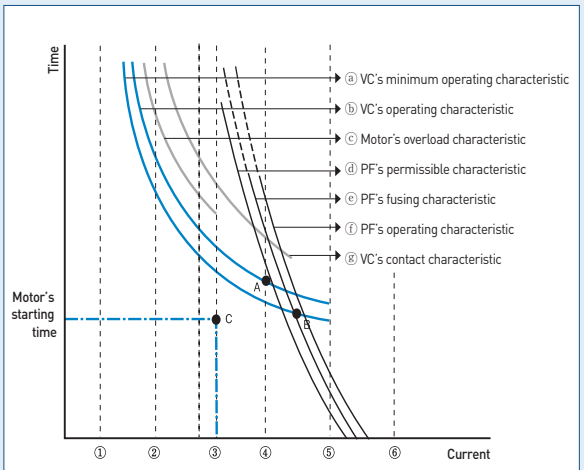

A: Intersection point of the VC's operating characteristic and PF's permissible characteristics
B: Intersection point of the VC's minimum operating characteristic and PF's operating characteristics (transfer current)
C: Motor's starting current-time characteristics

Current-time relation of the PF for transformer protection

When the secondary protective devices are not taken into consideration

- The transformer's allowable overload current (③) should be on the left side of the PF's permissible time-current characteristic (ⓒ); the transformer's full load current (①) ≤ PF's rated current (④)
- The 'C' point should be on the left side of the PF's permissible time-current characteristic.
- Secondary short-circuit current (⑧) > PF's minimum breaking current (⑥)

When a breaker is used for the secondary short-circuit protection

- It should satisfy the conditions specified in clause 1
- The operating characteristics of a breaker for the secondary short-circuit protection (ⓐ) should be on the left side (Under) of the transformer's allowable overload current characteristic (ⓑ) at the current that is smaller than the 'B' point.
- The operating characteristic of a low-voltage breaker(ⓐ) should be on the left side (Under) of the PF's permissible time-current characteristic(ⓒ) at the current that is smaller than the secondary short-circuit current (⑧).

※ Protecting relationship in a drawing
- Ⅰ range: PF protects the power system from short circuits.
- Ⅱ range: PF protects the transformer.
- Ⅲ range: PF does not operate.
- Ⅳ range: Fusing occurs, but breaking is not guaranteed.
- Ⅴ range: Breaking is guaranteed, but the transformer is not protected.
- Ⅲ+Ⅳ+Ⅴ: Transformer is not protected. (Backup measure: A breaker is used for coordination of the secondary short-circuit protection.

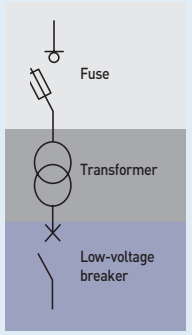

① Transformer's full load current
② Low-voltage breaker's minimum breaking current
③ Transformer's allowable o verload current
④ PF's rated current
⑤ PF's minimum fusing current
⑥ PF's minimum breaking current
⑦ Transformer's no-load magnetizing inrush current
⑧ Secondary short-circuit current
⑨ Low-voltage breaker's rated breaking current
⑩ Primary short-circuit current

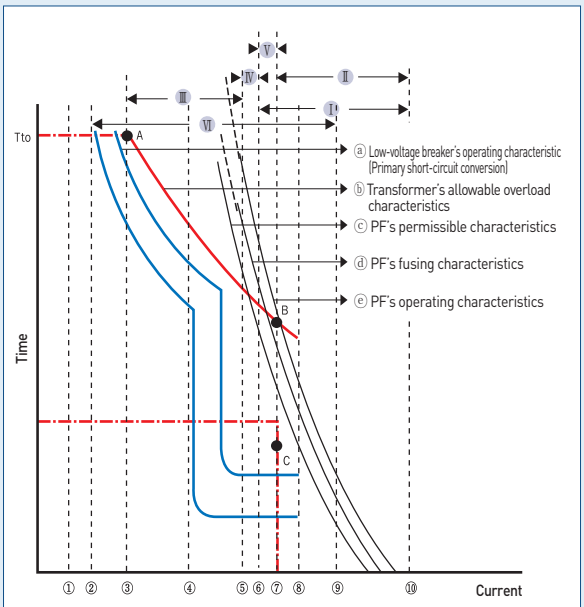

A: Transformer's allowable overload current
B: Intersection point of the transformer's allowable overload current characteristic and PF's operating characteristic
C: Transformer's no-load magnetizing inrush current, continuous time

Characteristic curve

Din type

3.6 / 7.2kV Current characteristic

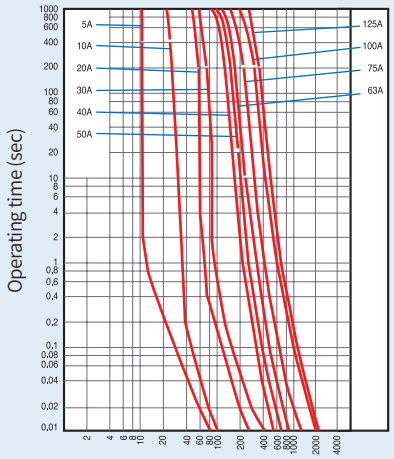

Conventional current (Effective value: A)

3.6 / 7.2kV Current limiting characteristics

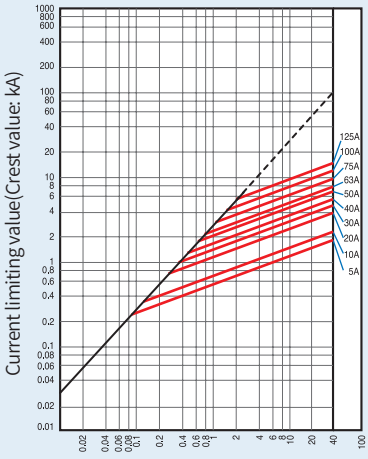

Conventional current (Effective value: kA)

3.6kV Current characteristic

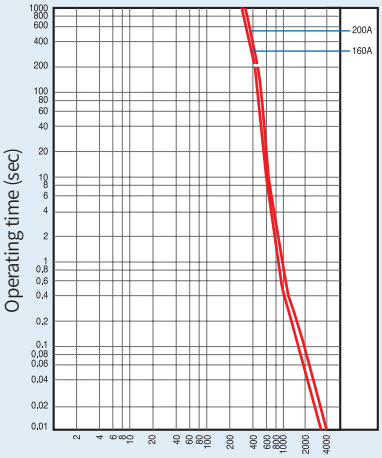

Conventional current (Effective value: A)

3.6kV Current limiting characteristics

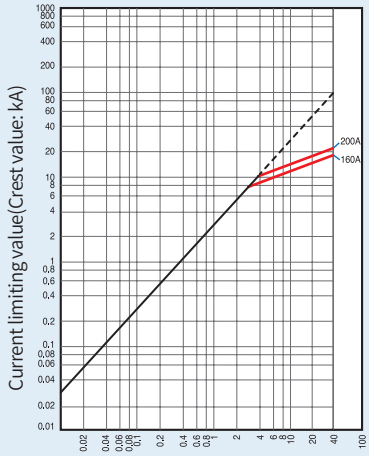

Conventional current (Effective value: kA)

7.2kV Current characteristic

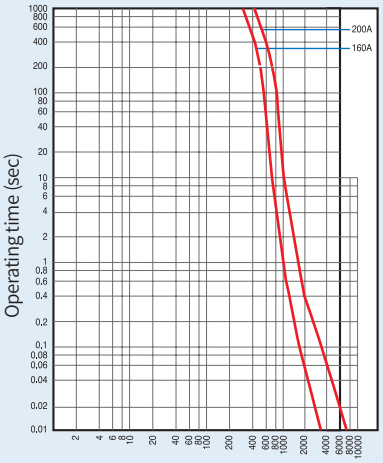

Conventional current (Effective value: A)

7.2kV Current limiting characteristics

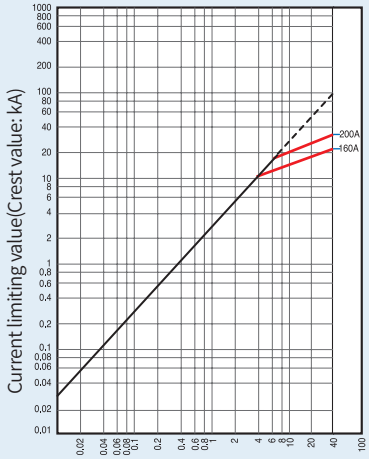

Conventional current (Effective value: kA)

Characteristic curve

KS type

3.6 / 7.2kV Current characteristic G-type fuse (Standard type)

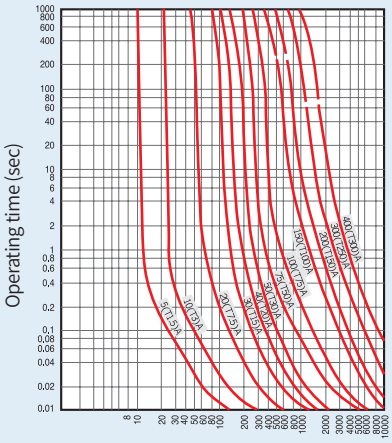

3.6 / 7.2kV Current limiting characteristic G-type fuse (Standard type)

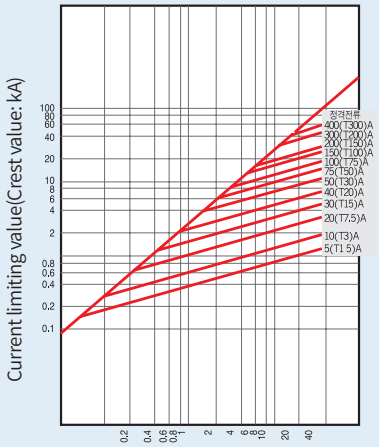

3.6kV Current characteristic M-type fuse (For motor protection)

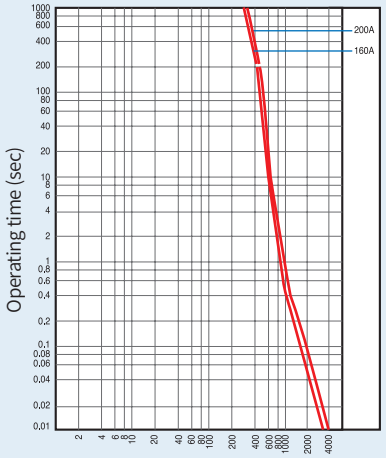

7.2kV Current characteristic M-type fuse (For motor protection)

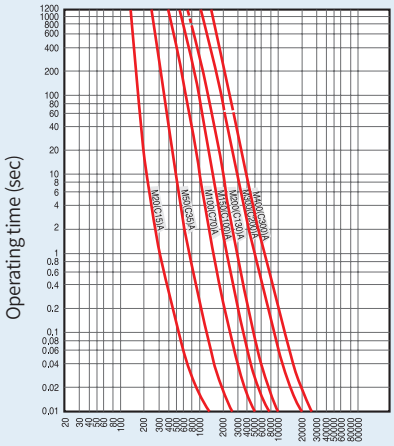

7.2kV Current limiting characteristic M-type fuse (For motor protection)

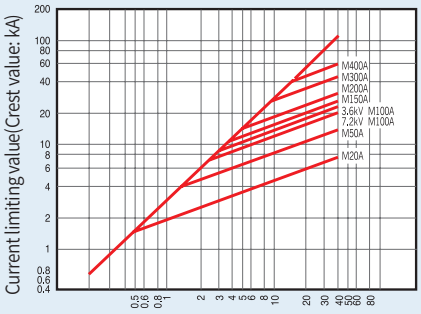

Memo

Global Network

LS is engaged in business all over the world.
LS global network includes 7 overseas corporations,
12 overseas branches, and 224 clients in 77 countries.



▶R&D

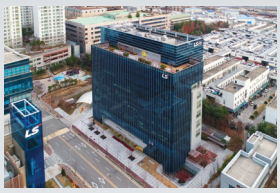

R&D campus

Focuses on gaining competitive advantages through development of next generation platforms



Power device R&D center

Leading technology in electric industry and continuously developing future-growth dynamic engines



Automation R&D center

Serves as the main research institute for LS



PT&T (Testing laboratory)

Internationally-renowned testing center that has formed partnerships with the UL, CE, KEMA and CESI

▶Factory



Cheongju factory (Korea)

Electric products, mold TR, MV / LV switchgear, HV GIS



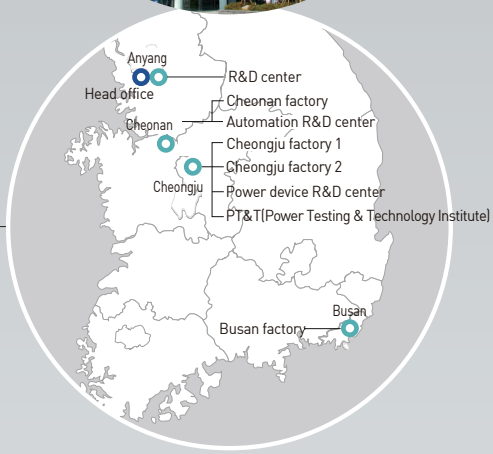



Cheonan factory (Korea)
PLC, AC drive, HMI, DCS, PV module



Busan factory (Korea)
HV TR, HVDC, FACTS



Wuxi factory (China)
Electric products



Dalian factory (China)
MV / LV switchgear,
MV contactor



Hanoi factory (Vietnam)
MV / LV switchgear,
Mold TR

Headquarter
127 LS-ro (Hogye-dong) Dongan-gu, Anyang-si, Gyeonggi-Do, 14119, Korea

Seoul Office
LS Yongsan Tower, 92, Hangang-daero, Yongsan-gu, Seoul, 04386, Korea
TEL: 82-2-2034-4916, 4684, 4429

C/Montcada 7, Pol. Ind. Les Pereres
08130 Santa Perpètua de Mogoda
Barcelona - Spain

Tel. +34 935 748 206
info@vectorenergy.com
www.vectorenergy.com

Specifications in this catalog are subject to change without notice due to continuous product development and improvement

© 2 015. 09 LS ELECTRIC Co., Ltd. All rights reserved. / English (11) 2025. 10 Staffcom