

Beyond X™

XGB Series

Programmable Logic Controller



vector Energy

LS ELECTRIC

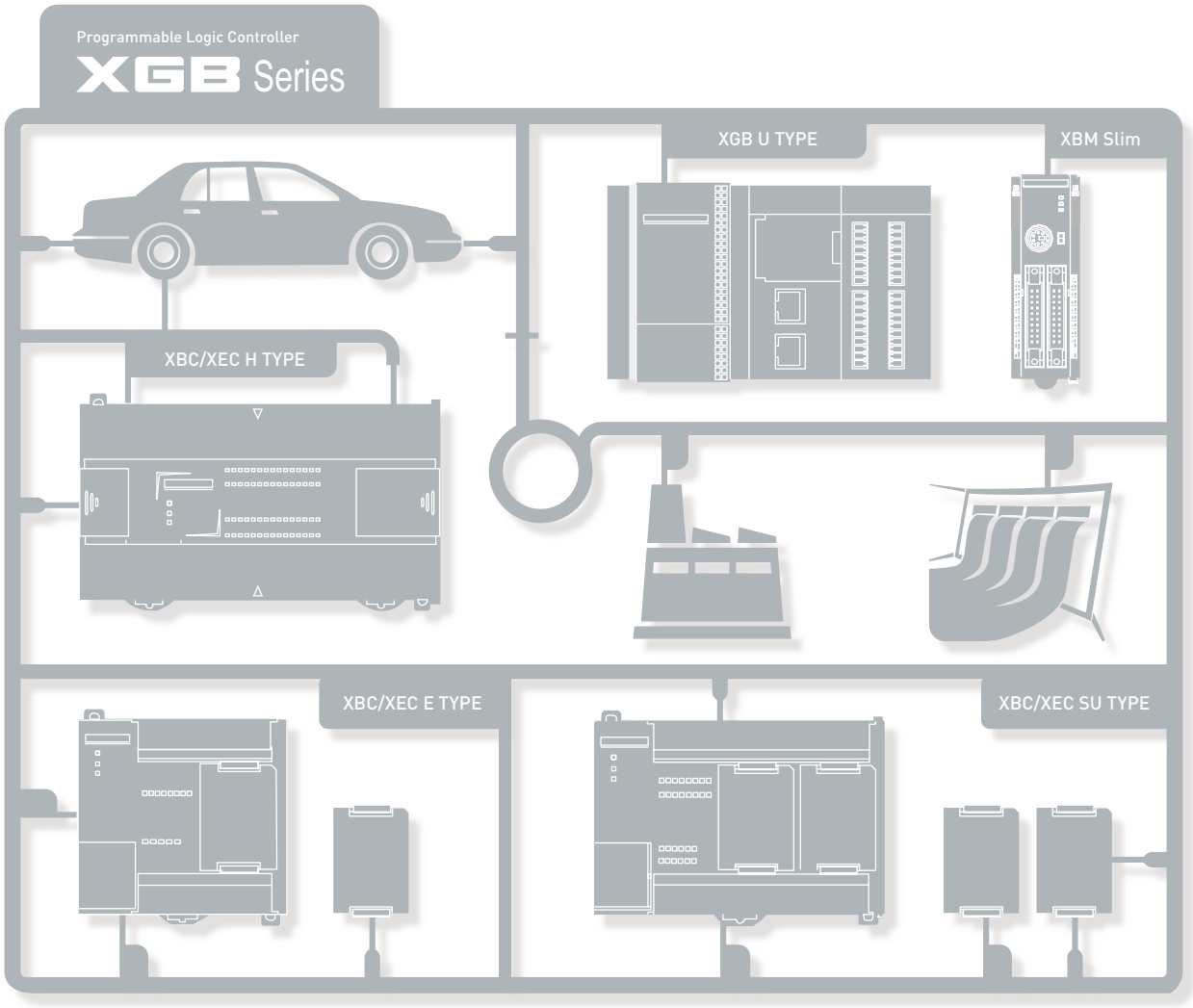

EASINESS
COMPACTNESS
FUNCTIONALITY
CONVENIENCE
HIGH PERFORMANCE

Programmable Logic Controller

XGB Series



FEATURES
4 ~ 15

FEATURES



XBC/XEC U
16 ~ 25

XGB U



XBC/XEC H
26 ~ 35

XBC/XEC H

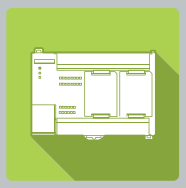

XBC/XEC SU
36 ~ 45

XBC/XEC SU



XBC/XEC E
46 ~ 53

XBC/XEC E

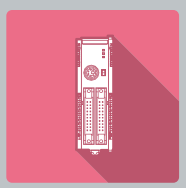

XBM Slim
54 ~63

XBM Slim



APPLICATION
64 ~ 132

APPLICATION

All-In-One PLC

With Next Generation Technology









XGB

XGB is a micro PLC that offers maximum performance at minimum cost.

With its high functionality, XGB supports from simple control system to complex task.

Strengthening its communication functions, XGB offers user-oriented integrated control.

Based on its strengths, XGB can be used in many application fields.



Series

It's Slim
It's Powerful

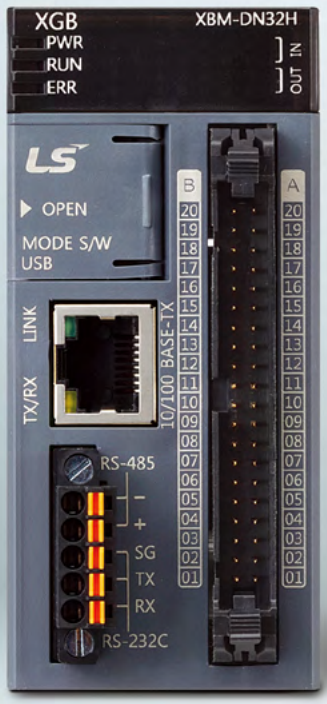

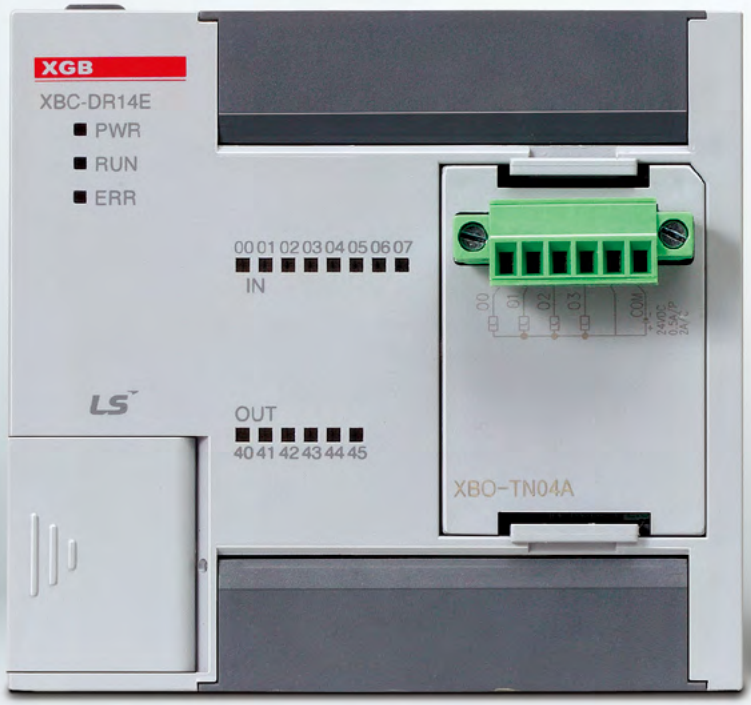

It's Slim

Item Size (W×H×D)	XBC/XEC U Type (Standard)	XBC/XEC H Type	XBC/XEC SU Type	XBC/XEC E Type	XBM Slim Type
Size (W×H×D)	150×64×90	114×64×90	135×64×90	100×64×90	30×60×90

Expansion	Special Module	Communication Module
Size (W×H×D)	20×63×90	27×63×90

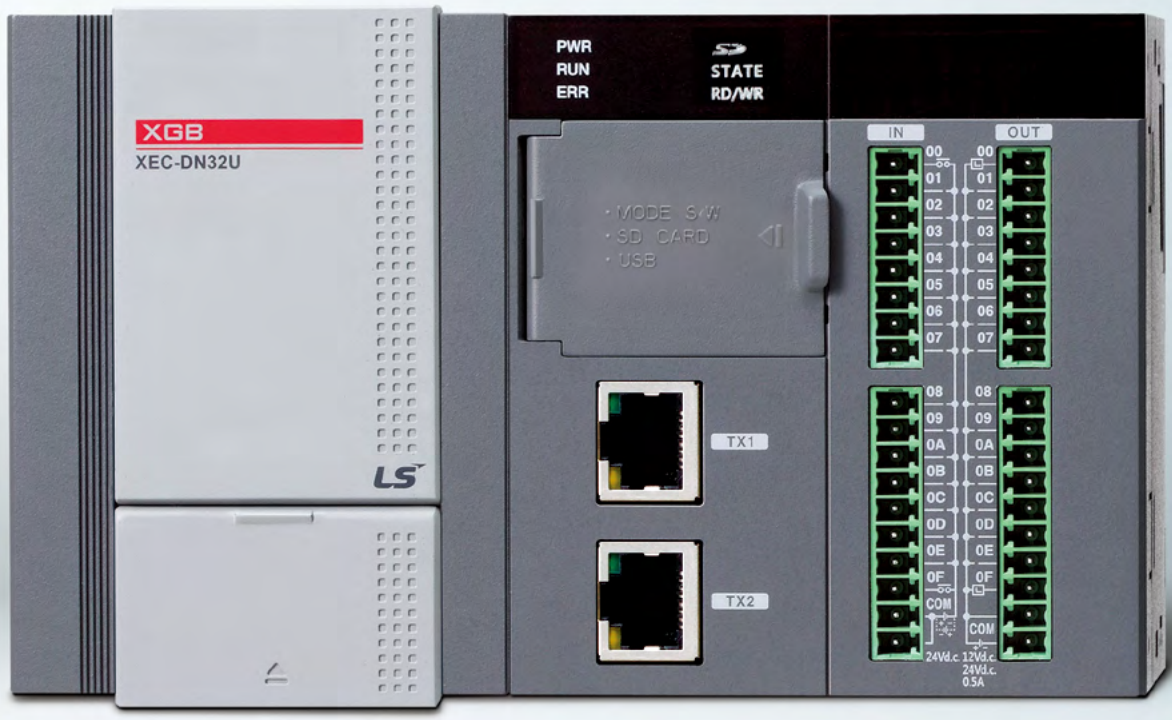

※ The actual size of the product

It's Powerful

- Ethernet 1 Ch. (Dual Port)
- RS-232C 1 Ch.
- RS-485 1 Ch.
- PID
- Web Server
- Data Log
- USB
- Pulse catch
- High speed counter 8 Ch. HSC
- Analog input/ output 8 Ch. IN OUT
- Positioning 4 axes
- External interrupt

※ XBC/XEC U Type

PLC Advances Beyond Imagination! Your Choice Has Never Been Clearer.

A future-ready total solution combining cutting-edge technology with user-oriented integrated control, enhanced performance and greater ease of use.



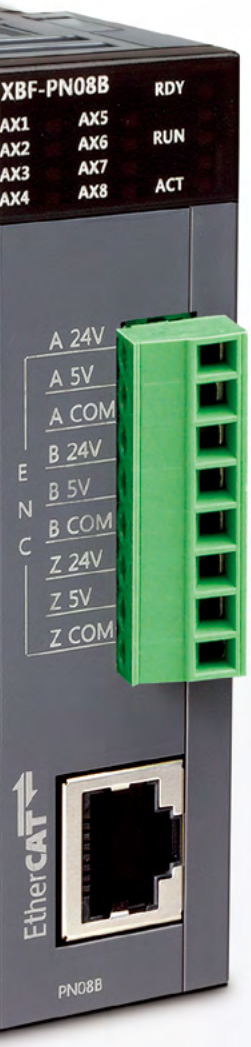

Expanded Applications with Various Expansion Modules

- Various expansion modules with different numbers of I/O points are provided.
- 8-point, 16-point and 32-point modules are available (relay output: 8 and 16 points only).
- Input-only, output-only and mixed I/O modules enable various I/O configurations.
- Multi-channel analog control is possible using up to 10 analog modules.Note
- Analog I/O and temperature controllers enable the configuration of multi-channel analog control systems.
- Dedicated parameter settings and special-module dedicated registers (U) simplify programming.
- Parameter setting and trial operation can be performed simultaneously through the special module monitoring window.

Note: Maximum number of modules — XBC/XEC "U": 10; XBC/XEC "H": 10; XBC/XEC "SU": 7; XBM: 7.

Various Expansion Options

- Compatible with XGB expansion modules
- Max. 2 high-speed backplane expansion modules
- Max. 10 expansion modules
- Max. 352 I/O points
- Expansion I/O module
  - DC24 input, Transistor output, Relay output
- Special module
  - Analog input, Analog output, RTD, Thermocouple, High-speed counter, Positioning (Line drive 2 axes, EtherCAT network 8 axes)
- Communication modules
  - RS-232C, RS-422/485, Ethernet, CANopen (Master/Slave), Profibus-DP (Master/Slave), DeviceNet (Slave), EtherNet/IP, RAPIEnet

Expansion(XBC/XEC U Type)

- Max. 10 expansion modules
  - Max. 2 high-speed backplane modules
  - Max. 2 Communication modules

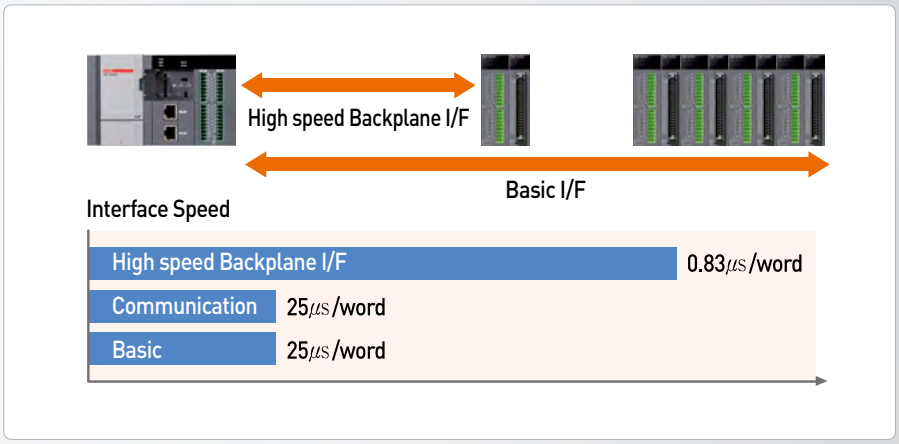

Optimal Communication Environment

- 3 built-in communication channels: loader port (1 CH), RS-232C (1 CH) and RS-485 (1 CH).
- The "E" type provides 2 channels: a loader port (1 CH) and one selectable RS-232C or RS-485 channel.
- Up to 5 communication channels with 2 expansion modules (expansion is not supported by the "E" type).
- Various communication modules available: Ethernet, Cnet, RAPIEnet, EtherNet/IP, CANopen (Master/Slave), Profibus-DP (Master/Slave) and DeviceNet (Slave).

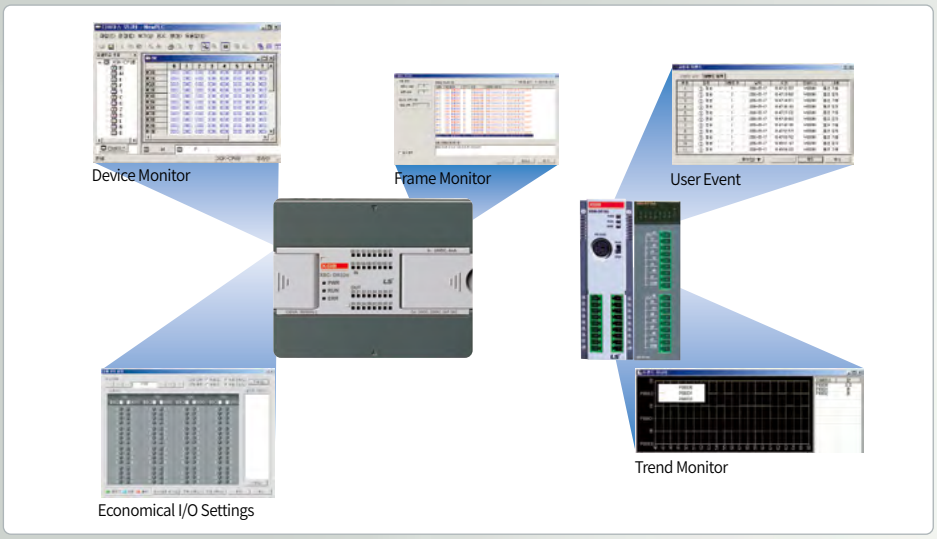

Web Server

- Monitoring of PLC information and data through a web browser (PLC basic info., module info., diagnosis, device monitoring, flag monitoring, data log file download, O/S update, ladder program update, etc.)
- Time synchronization by setting basic parameters (SNTP: Simple Network Time Protocol)
- Email service through commercial email (SMTP: Simple Mail Transfer Protocol)

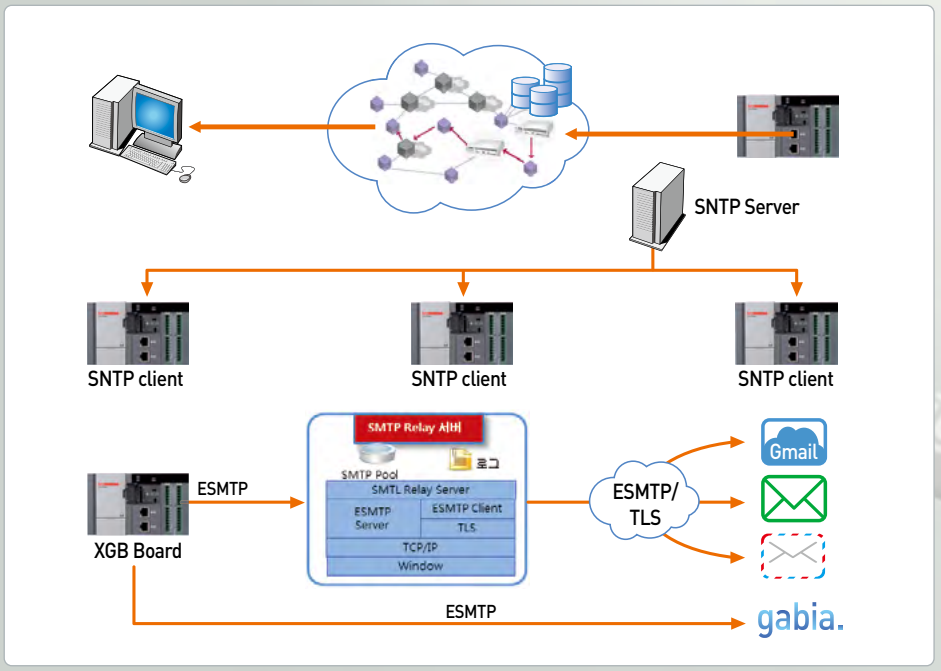

Provides an intuitive user interface for easy operation, with a wide range of network diagnostics, monitoring and backup functions.



Designed for next-generation applications, it offers a wide range of powerful built-in functions that set it apart from conventional PLCs.

Powerful built-in function

Built-in high speed counter

Phase	XBC/XEC				XBM
	U	H	SU	E	
1 Phase	100kHz(8Ch)	100kHz(4Ch)	100kHz(2Ch)	4kHz	20kHz
		20kHz(4Ch)	20kHz(6Ch)		
	8Ch	8Ch	8Ch	4Ch	4Ch
2 Phase	50kHz(4Ch)	50kHz(4Ch)	50kHz(1Ch)	2kHz	2 multiplication: 10kHz 4 multiplication: 8kHz
		10kHz(4Ch)	8kHz(3Ch)		
	4Ch	4Ch	4Ch	2Ch	2Ch



Built-in PID function

- It supports built-in PID control function up to 16 loops.
  - It provides parameter setting using XG5000, convenient loop state monitoring through trend monitor.
  - It can simply get a coefficient value by improved auto-tuning algorithm
  - Control accuracy improvement by using various additional functions such as PWM output, ΔMV, ΔPV, SV Ramp, etc.
  - It provides various control modes such as forward/reverse mixed operation, 2-stage SV PID control, cascade control, etc.
  - Various alarm functions such as MV high/low limit, PV high/low limit, PV variation

Built-in analog I/O function (Available for XBC/XEC-DN32UA type only)

- Built-in analog input 4 channels (voltage/current, 14bit)
- Built-in analog output 4 channels (voltage/current 14bit)

Built-in position control function (Available for XBC/XEC-DN32UP type only)

- Line drive output positioning function with up to 2 Mpps, 4-axis
- Parameter set up by XG-PM providing operation data edition, divers monitoring and diagnosis functions.

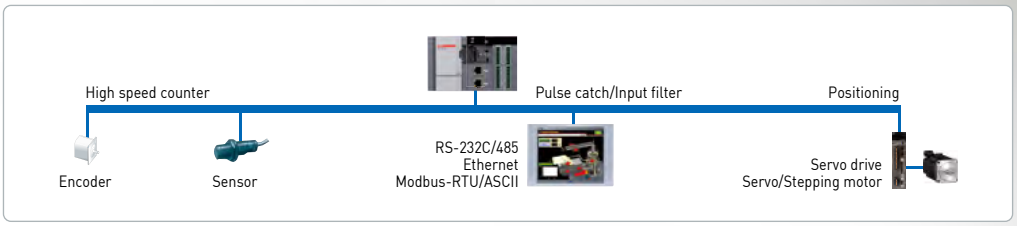



With its high-speed processing and system capability, XGB offers the utmost efficiency for your applications.



XBC/XEC U

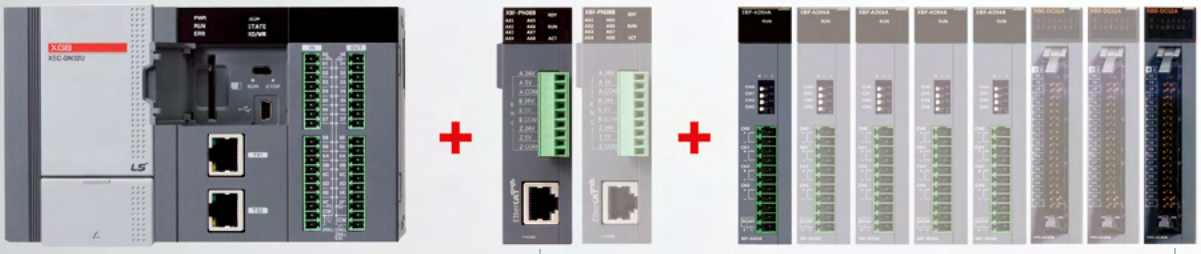

Standard type

Max. 10 stages (High speed interface module : Max. 2 stages)

XBC/XEC H



Max. 10 stage (Including communication 2 stages)

XBC/XEC SU

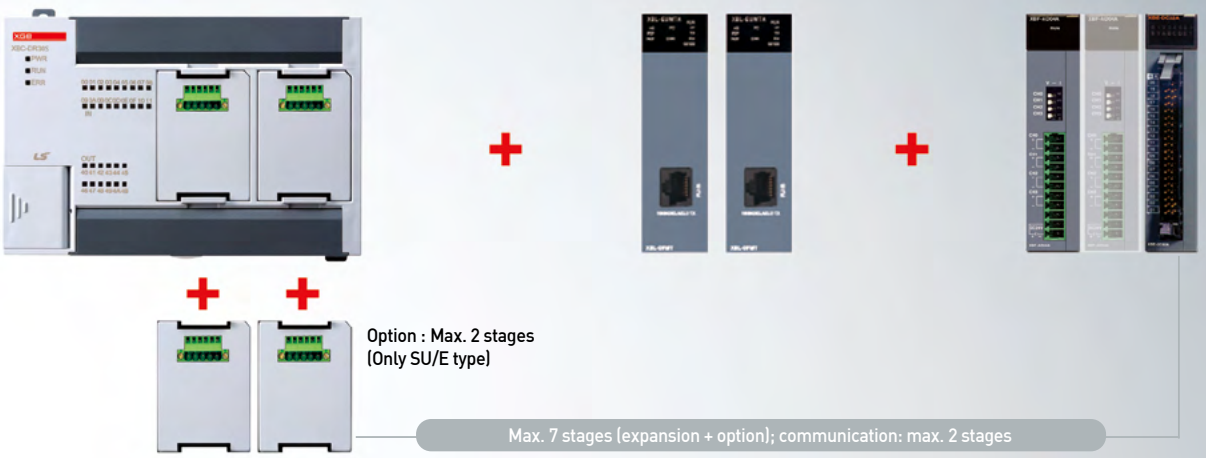

XBC/XEC E

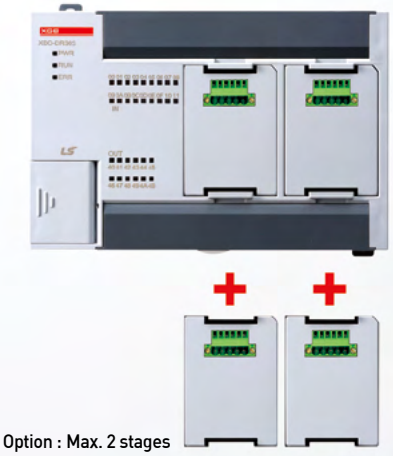

Option modules	
XBO-RTCA	RTC (Real time clock), Battery
XBO-DC04A	DC 24V, Input 4 points
XBO-TN04A	TR (Sink), Output 4 points
XBO-AD02A	Voltage/Current, Input 2ch
XBO-DA02A	Voltage/Current, Output 2ch
XBO-AH02A	Voltage/Current, Input 1ch / Voltage/Current, Output 1ch
XBO-RD01A	RTD (Resistance temperature detector), Input 1ch
XBO-TC02A	TC (Thermo couple), Input 2ch

XBM Slim

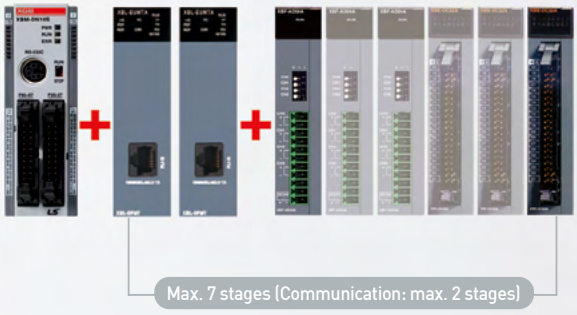

XBM/XEM H, H2, HP

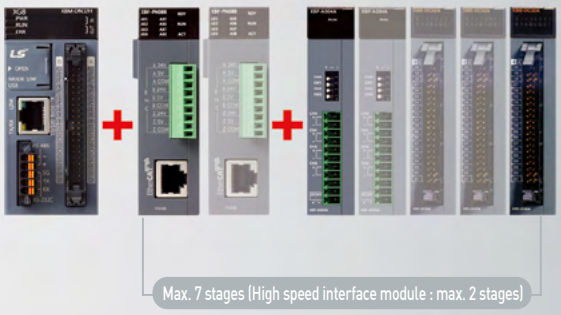

XGB U Type

Ultimate Performance

Universal IoT

User Oriented

Contents

Main unit 18

Specifications 18

Built-in functions 21

System configuration 23

I/O wiring 25




XGB
XEC-DN32UA
PWR
RUN
ERR
STATE
RD/WR
A/D
D/A
IN
OUT
TX1
XGB
XEC-DN32U
TX2
AX3
AX4
AX1
AX2

General specifications

Item	Descriptions				Standard
Ambient temperature	0 ~ 55 °C				
Storage temperature	- 25 ~ + 70 °C				
Ambient humidity	5 ~ 95%RH (Non-condensing)				
Storage humidity	5 ~ 95%RH (Non-condensing)				
Vibration resistance	Occasional vibration			10 times each direction (X, Y and Z)	IEC61131-2
	Frequency	Acceleration	Pulse width		
	5 ≤ f < 8.4Hz	-	3.5mm		
	8.4 ≤ f ≤ 150Hz	9.8m/s² (1G)	-		
	Continuous vibration				
	Frequency	Acceleration	Pulse width		
	5 ≤ f < 8.4Hz	-	1.75mm		
	8.4 ≤ f ≤ 150Hz	4.9m/s² (0.5G)	-		
Shock resistance	• Peak acceleration: 147m/s² (15g) • Duration: 11ms • Pulse waveform: Half-sine, 3 times each direction per each axis				IEC61131-2
Noise resistance	Square wave impulse noise	AC: ±1,500 V DC: ±900V			LS ELECTRIC Standard
	Electrostatic discharge	4kV			IEC61131-2 IEC61000-4-2
	Radiated electro-magnetic field noise	80 ~ 1000MHz, 10V/m			IEC61131-2 IEC61000-4-3
	Fast transient/ Burst noise	Main unit		Expansion module	IEC61131-2 IEC61000-4-4
		2kV		1kV	
Operating ambience	Free from corrosive gases and excessive dust				
Altitude	Up to 2,000m				
Pollution level *1)	Less than 2				
Cooling	Air-cooling				

*1) Pollution level indicates the degree to which conductive material is generated in the environment where the equipment is used.
Pollution level 2 is the condition that only non-conductive pollution occurred but temporary conductivity may be produced due to condensing.

※ General specifications are common to XBC/XEC U, H, SU, E, and XBM Slim types.

Performance specifications (XBC "U" type)

Item		XBC-DN(P)32U XBC-DN(P)32U/DC	XBC-DR28U XBC-DR28U/DC	XBC-DN(P)32UA XBC-DN(P)32UA/DC	XBC-DR28UA XBC-DR28UA/DC	XBC-DN(P)32UP XBC-DN(P)32UP/DC	XBC-DR28UP XBC-DR28UP/DC	Remark
Program control method		Cyclic execution of stored program, Time-driven interrupt, Process-driven interrupt						
I/O control method		Batch processing by simultaneous scan (Refresh method), Directed by program instruction						
Program language		Ladder Diagram, Instruction List						
Number of instructions	Basic	28						
	Application	677						
Processing speed (Basic instruction)		60ns/step						
Program capacity		32Kstep						
Max. I/O points		352points	348points	352points	348points	352points	348points	Main + 10 expansions
Data area	P	P00000 ~ P2047F(32,768 points)						Input/Output
	M	M00000 ~ M2047F(32,768 points)						
	K	K00000 ~ K8191F(131,072 points)						
	L	L00000 ~ L4095F (65,536 points)						Link
	F	F00000 ~ F2047F (32,768 points)						Flag
	T	100ms, 10ms, 1ms: T0000 ~ T2047 (2,048 points)						Timer
	C	C000 ~ C2047 (2,048 points)						Counter
	S	S00.00 ~ S127.99						Step
	D	D00000 ~ D19999 (20000 words)						Data register
	U	U00.00 ~ U0B.31 (384 words)						Analog Data
	Z	Z000~Z127 (128 words)						
	N	N0000~N10239(10,240 words)						
File register	R	RAM area: 2 blocks (R0–R16,383)						
		FLASH area: 4 blocks (128 KB)						
Total number of programs		256						
Initial task	Initial task	1						
	Cyclic task	Max 16						
	I/O task	Max 8						
	Internal device task	Max 16						
	High Speed Counter task	Max 8						
Operation mode		RUN, STOP, DEBUG						
Self-diagnosis function		Detects scan-time, memory, I/O, and power-supply errors						
Program port		USB 1 channel, Ethernet						
Data retention in the event of a power failure		Latch area setting in basic parameter						
Internal current consumption		700mA	990mA	780mA	1,040mA	1,250mA	1,550mA	
Weight		571g	630g	683g	732g	673g	722g	

Performance specifications (XEC "U" type)

Item			XEC-DN(P)32U / XEC-DN(P)32U/DC	XEC-DR28U / XEC-DR28U/DC	XEC-DN(P)32UA / XEC-DN(P)32UA/DC	XEC-DR28UA / XEC-DR28UA/D	XEC-DN(P)32UP / XEC-DN(P)32UP/DC	XEC-DR28UP / XEC-DR28UP/DC	Remark
Program control method			Ladder Diagram, Instruction List, SFC, ST						
I/O control method			18						
Program language			136 + Floating-point Arithmetic Functions						
Number of instructions	Operator		43						
	Basic function		Each special module has its own special function blocks						
	Basic function block		60ns/step						
	Special function block		384Kbyte						
Processing speed (Basic instruction)			60ns/step						
Program memory			384KB						
Max. I/O points			352points	348points	352points	348points	352points	348points	Main + 10 expansions
Data area	Symbolic variable (A)		64KB (Retain setting available)						
	Input variable (I)		2KB						
	Output variable (Q)		2KB						
	Direct variable	M	32KB (Retain setting available)						
		R	32KB * 2 blocks						
		W	64KB						"Same area with R"
	Flag variable	F	4KB						System flag
		K	16KB						Keep relay
		L	8KB						Link relay
		U	768Byte						"Analog data refresh area"
		N	20KB						P2P parameter
Flash area			4 blocks (128Kbyte)						Using R device
Timer			No limit in points (Time range: 0.001~ 4,294,967.295)						
Counter			No limit in points (Counter range: 64 bit range)						
Total program			256						
Initial task	Initial task		1						
	Cyclic task		Max 16						
	Initial task		1						
	Cyclic task		Max 16						
	I/O task		Max 8						
	Internal device task		Max 16						
	High Speed Counter task		Max 8						
Operation mode			RUN, STOP, DEBUG						
Self-diagnosis function			Detects errors of scan time, memory, I/O and power supply						
Program port			USB 1 channel, Ethernet						
Retain data at power failure			Latch area setting in basic parameter						
Internal consumption current			700mA	990mA	780mA	1,040mA	1,250mA	1,550mA	
Weight			571g	630g	683g	732g	673g	722g	

Performance specifications (XEC "U" type)

Item			XBC/XEC-DN(P)32U XBC/XEC-DN(P)32U/DC	XBC/XEC-DR28U XBC/XEC-DR28U/DC	XBC/XEC-DN(P)32UA XBC/XEC-DN(P)32UA/DC	XBC/XEC-DR28UA XBC/XEC-DR28UA/D	XBC/XEC-DN(P)32UP XBC/XEC-DN(P)32UP/DC	XBC/XEC-DR28UP XBC/XEC-DR28UP/DC	Remark
Built-in function	PID control		Control by instruction, auto-tuning, PWM output, Forced output, Operation scan time setting, Antiwindup, Delta MV, PV tracking, Hybrid operation, Cascade operation						
	Serial	Protocol	Dedicated protocol, Modbus protocol User-defined protocol , LS bus(inverter protocol)						
		Channel	RS-232C 1 port and RS-485 1 port						
	Ethernet	Transfer spec	Cable: 100Base-TX Speed: 100Mbps Auto-MDIX *1) IEEE 802.3						
		Topology	Line, star						
		Diagnosis	Module information, service condition						
		Protocol	XGT dedicated Modbus TCP/IP user-defined frame						
		Service	P2P, High Speed link, Remote connection						
	Datalog	Group	Max 10 groups						
		Data set	32 per group						
		Extension	CSV files						
		File size	Max 16Mbyte						
		SD memory type	SD, SDHC type (Recommended: SanDisk, Transcend)						
		Memory size	Max 16GB						
		File system	FAT32						
	High Speed Counter	Performance	1-phase : 100KHz 8 channels 2-phase : 50KHz 4 channels						
		Counter mode	4 counter modes are supported based o n input pulse and INC/DEC method • 1 pulse operation Mode : INC/DEC count by program • 1 pulse operation Mode : INC/DEC count by phase B pulse input • 2 pulse operation Mode : INC/DEC count by input pulse • 2 pulse operation Mode : INC/DEC count by difference of phase						
		Function	• Internal/external preset • Latch counter • Compare output • No. of rotation per unit time						

*1) Auto-MDIX(Automatic medium-dependent interface crossover) : It is the function to automatically detect whether the cable connected to the Ethernet port is peer-to-peer(straight) or cross cable

Positioning

Item	Specifications	Remark
Basic Function	No. of control axes: 4 axes Control Method: Position, Speed, Speed/Position, Feed Control Control Unit: Pulse, mm, inch, degree Positioning Data: Each axis can have up to 400 data (Step number: 1~400) Operation pattern: End, Keep, Continuous Operation method: Singular, Repeat	Available On UP type
interpolation	2/3/4 axis linear interpolation 2 axis circular interpolation 3 axis helical interpolation	
Positioning	Method: Absolute/Incremental method Address range: -2,147,483,648 to 2,147,483,647 Speed: Max 2Mpps (1~2,000,000pps) Acc./Dec. process: Trapezoid type, S-type	
Homing method	DOG+HOME(Off), DOG+HOME(On), Upper limit + HOME, DOG, High speed, Upper/Lower limit, HOME	
Manual operation	Jog operation, MPG operation, Inching operation	
Encoder input	Line drive(RS-422A) input 1 channel (Max. 200 kpps)	

Analog

Item		Specifications		Remark
Analog input	Channels	4 channels (current/voltage)		Available On UP type
	Specification	Input Range	Voltage: 1~5V, 0~5V, 0~10V, -10~10V, Current: 4~20mA, 0~20mA Current input or Voltage input can be selected through the external terminal wiring setting.	
		Input resistance	1MΩ or more (voltage input), 250Ω (current input)	
		Max. Resolution	1/16000 Voltage: 0.250mV (1~5V), 0.3125mV (0~5V), 0.625mV (0~10V), 1.250mV (±10V) Current: 1.0μA (4~20mA), 1.25μA (0~20mA)	
		Accuracy	±0.2% or less (When ambient temperature is 25°C) ±0.3% or less (When ambient temperature is 0~55°C)	
Analog output	Channels	Voltage 2 channels, Current 2 channels		
	Specification	Output Range	Voltage: 1~5V, 0~5V, 0~10V, -10~10V, Current: 4~20mA, 0~20mA Output ranges are set in user program or I/O parameter per each channel.	
		Load resistance	1MΩ or more (voltage output), 600Ω or less (current output)	
		Max. Resolution	1/16000 Voltage: 0.250mV (1~5V), 0.3125mV (0~5V), 0.625mV (0~10V), 1.250mV (±10V) Current: 1.0μA (4~20mA), 1.25μA (0~20mA)	
		Accuracy	±0.2% or less (When ambient temperature is 25°C) ±0.3% or less (When ambient temperature is 0~55°C)	

System configuration

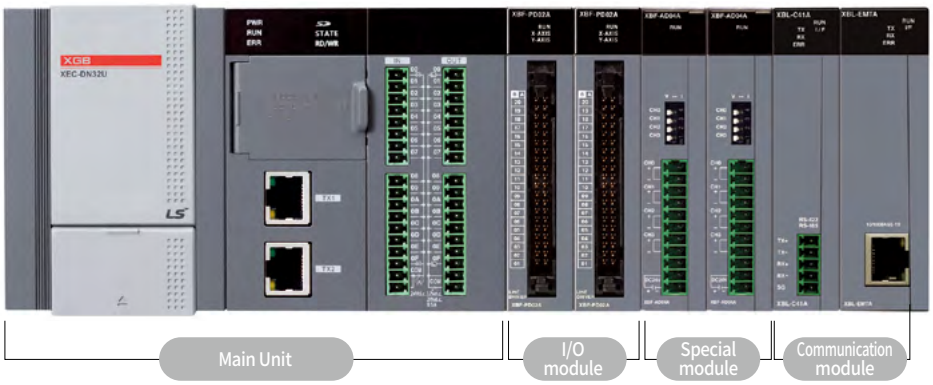

Built-in communication system configuration

1:1 connection to an HMI using the main unit's built-in RS-232C or RS-485 port.

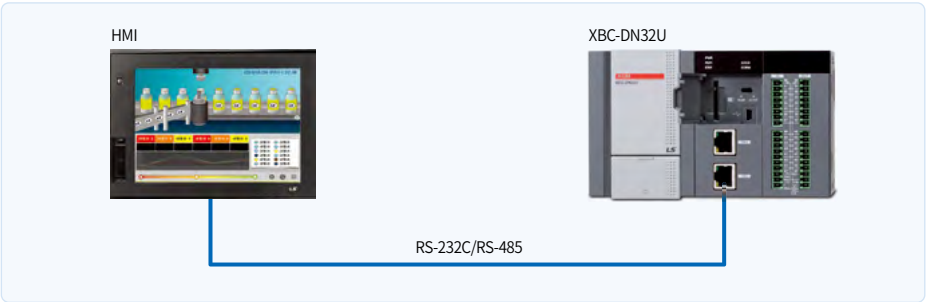

Communication with another PLC via the main unit's built-in RS-485 port, with a 1:1 connection to an HMI via the built-in RS-232C port.

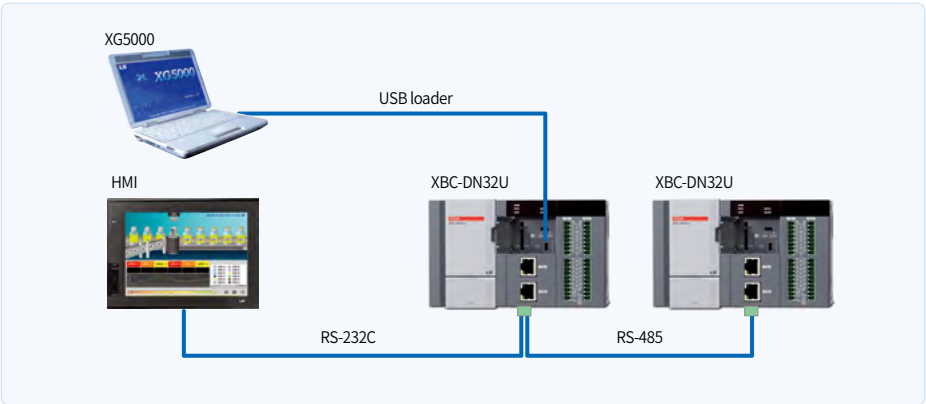

1:N communication with up to 32 stations using the main unit's built-in RS-485 port.

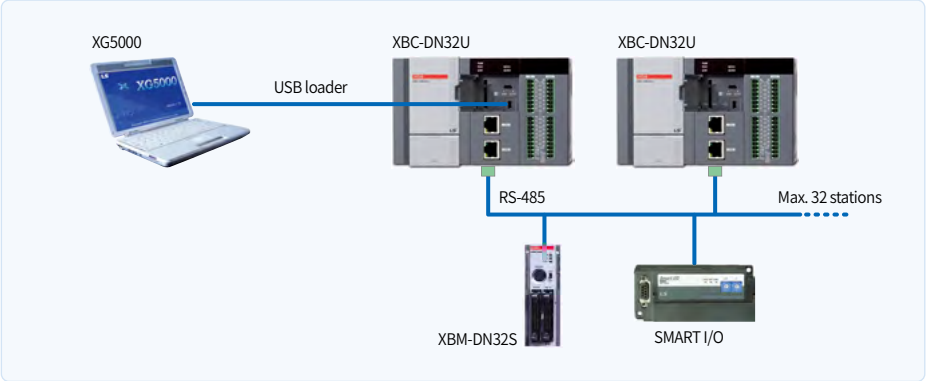

Ethernet system configuration

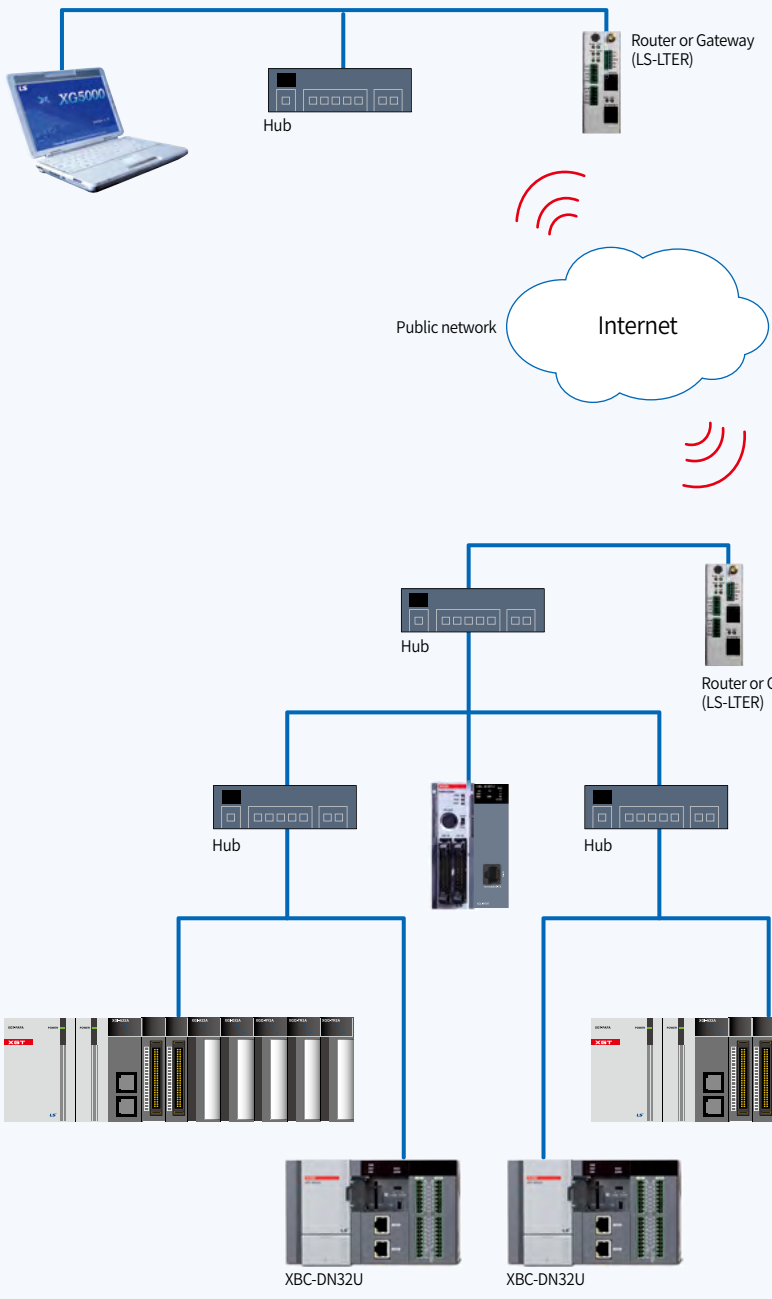

XBC/XEC-DN(P)32U/UP/UA, XBC/XEC-DR28U/UP/UA 16-point input (Source/Sink type)

Circuit configuration

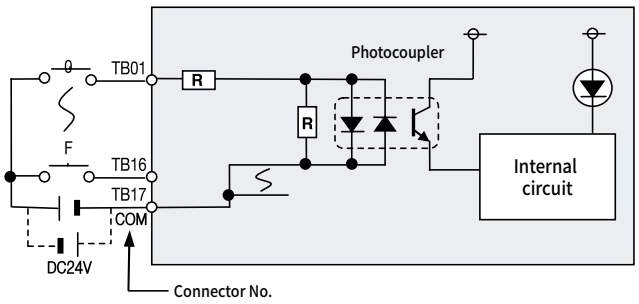

NO.	Contact
TB01	0
TB02	1
TB03	2
TB04	3
TB05	4
TB06	5
TB07	6
TB08	7
TB09	8
TB10	9
TB11	A
TB12	B
TB13	C
TB14	D
TB15	E
TB16	F
TB17	COM
TB18	COM

Type

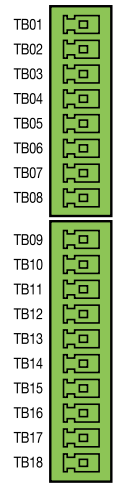

XBC/XEC-DN32U/UA/UP Transistor output (Sink type)

Circuit configuration

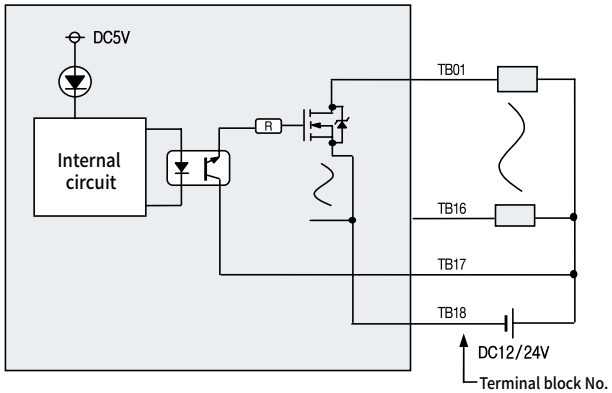

NO.	Contact
TB01	0
TB02	1
TB03	2
TB04	3
TB05	4
TB06	5
TB07	6
TB08	7
TB09	8
TB10	9
TB11	A
TB12	B
TB13	C
TB14	D
TB15	E
TB16	F
TB17	DC12/24V
TB18	COM

Type

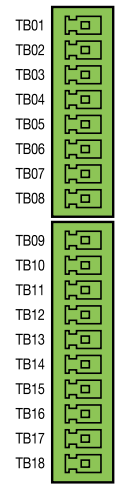

XBC/XEC-DR28U/UA/UP Relay Output (Relay type)

Circuit configuration

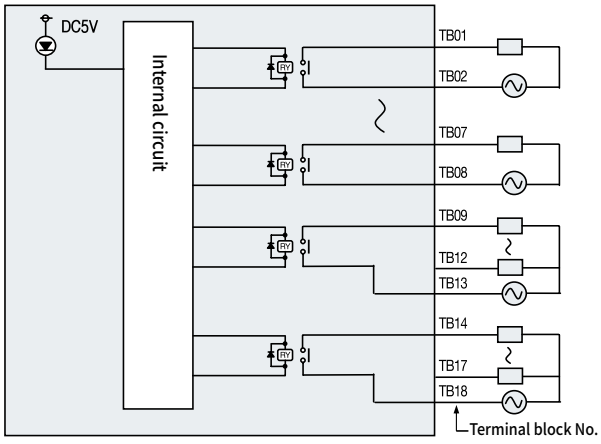

NO.	Contact
TB01	0
TB02	COM0
TB03	1
TB04	COM1
TB05	2
TB06	COM2
TB07	3
TB08	COM3
TB09	4
TB10	5
TB11	6
TB12	7
TB13	COM4
TB14	8
TB15	9
TB16	A
TB17	B
TB18	COM5

Type

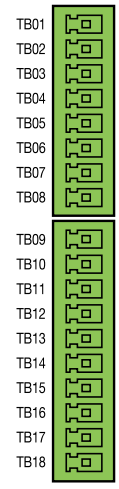

XGB U

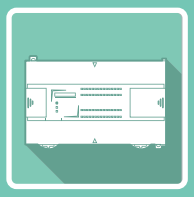

XBC/XEC H Type

High Performance

Contents

Main unit 28
Specifications 28
System configuration 30
I/O wiring 31



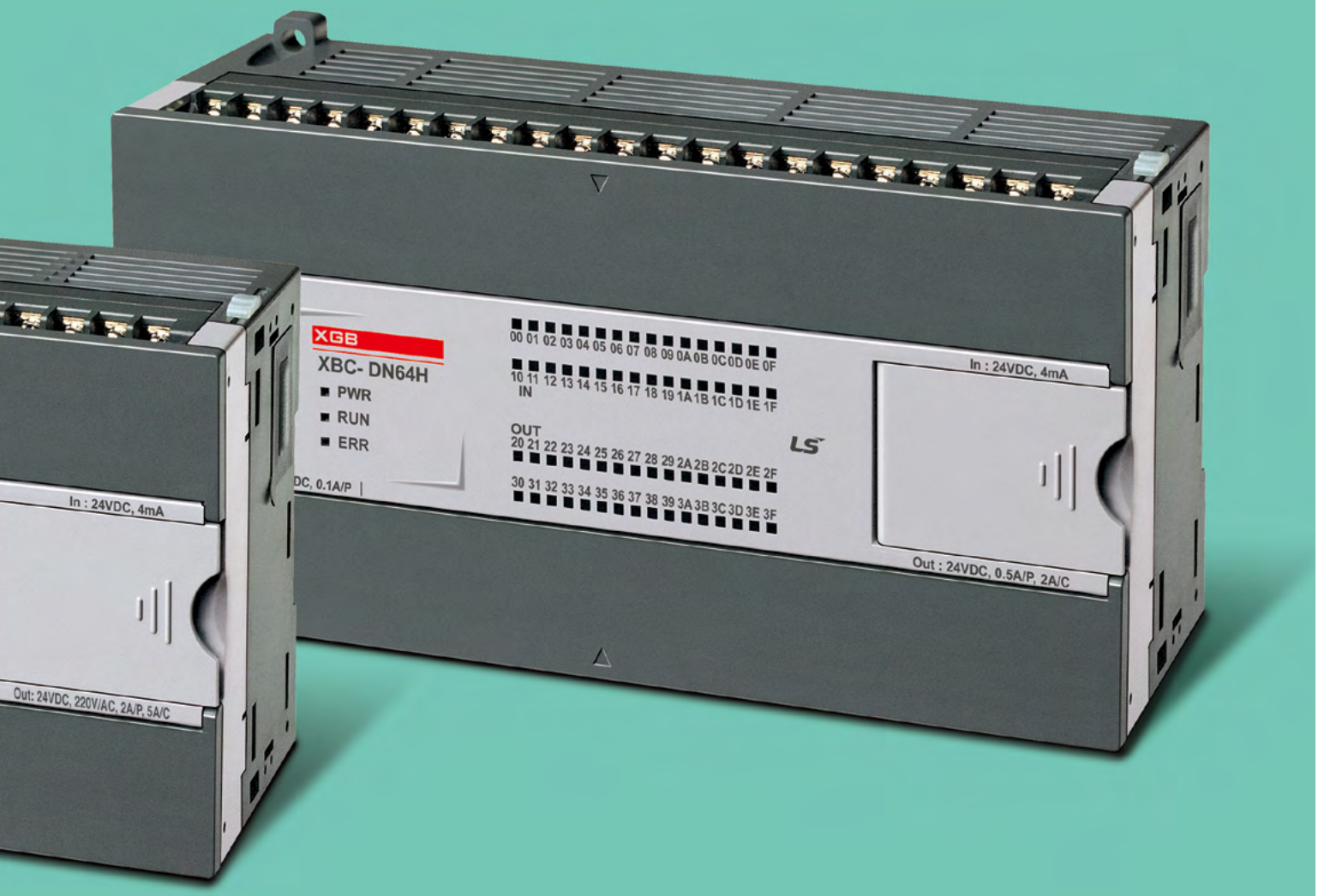
XGB
XBC- DN64H
PWR
RUN
ERR
00 01 02 03 04 05 06 07 08 09 0A 0B 0C 0D 0E 0F
10 11 12 13 14 15 16 17 18 19 1A 1B 1C 1D 1E 1F
IN
OUT
20 21 22 23 24 25 26 27 28 29 2A 2B 2C 2D 2E 2F
30 31 32 33 34 35 36 37 38 39 3A 3B 3C 3D 3E 3F
In : 24VDC, 4mA
Out : 24VDC, 0.5A/P, 2A/C
In : 24VDC, 4mA
Out: 24VDC, 220V/AC, 2A/P, 5A/C

Performance specifications (XBC "H" type)

Item		XBC-DR32H / XBC-DR32H/DC	XBC-DN32H / XBC-DN32H/DC Note 1)	XBC-DR64H / XBC-DR64H/DC	XBC-DN64H / XBC-DN64H/DC
Program control method		Cyclic execution of stored program, time-driven interrupt, process-driven interrupt, constant scan			
I/O control method		Batch processing by simultaneous scan (refresh method), direct processing by program instruction			
Program language		Ladder Diagram, Instruction List			
Number of instructions	Basic	28			
	Application	687			
Processing speed (basic instruction)		OS version 5.00 or higher: 60 ns/step Below 5.00: 83 ns/step			
Program capacity		15kstep			
Max. I/O points		352 points		384 points	
Data area	P	P0000 ~ P1023F (16,384 points)			
	M	M0000 ~ M1023F (16,384 points)			
	K	K0000 ~ K4095F (65,536 points)			
	L	L0000 ~ L2047F (32,768 points)			
	F	F0000 ~ F1023F (16,384 points)			
	T	100 ms, 10 ms, 1 ms: T0000 ~ T1023 Area assignment can be changed through parameter settings.			
	C	C0000 ~ C1023			
	S	S00.00 ~ S127.99			
	D	D0000 ~ D10239			
	U	U0.0 ~ U0A.31 (analog data refresh area)			
	Z	Z000 ~ Z127 (128 words)			
	N	N0000 ~ N5119 (5,120 words)			
	R	R0000 ~ R10239			
Total programs		128			
Initial task		1			
Cyclic task		Max. 8			
I/O task		Max. 8			
Internal device task		Max. 8			
Operation mode		RUN, STOP, DEBUG			
Self-diagnosis function		Detects errors in scan time, memory and I/O			
Program port		RS-232C: 1 channel; USB: 1 channel (USB 1.1 supported)			
Back-up method		Latch area setting in basic parameters			
Built-in functions		RS-232C/485 communication, high-speed counter, PID, pulse catch, input filter,external input interrupt, positioning Note 3)			
Internal consumption current		660 mA	260 mA	1,040 mA	330 mA
Weight		600 g	500 g	900 g	800 g
Current capacity Note 2)		2 A	2 A	3 A	3 A

Note 1) Note 1: The "/DC" models use a 24 V DC power supply.
Note 1) Current capacity is the maximum output current of the XBC's built-in 5 V DC power supply board.
The total internal current consumption of the XBC and connected expansion modules must not exceed this capacity.
Note 1) The built-in positioning function is available only for transistor-output models.

Performance specifications (XEC "H" type)

Item			XEC-DR32H	XEC-DN(P)32H	XEC-DR64H	XEC-DN(P)64H	Remarks
Number of instructions	Operators		18				
	Basic functions		136 + floating-point arithmetic functions				
	Basic function blocks		43				
	Special function blocks		Dedicated functions for special features				
Processing speed(basic instruction)			OS version 5.00 or higher: 60 ns/step Below 5.00: 83 ns/step				
Program capacity			OS version 5.00 or higher: 250 KB; below 5.00: 200 KB (Maximum capacity is equivalent to 110 KB on the XGI.)				
Max. I/O points			352 points		384 points		
Data memory	Symbolic variables	A	64 KB (entire area configurable as retain memory)				
	Input variables	I	2 KB (%IX15.15.63)				
	Output variables	Q	2 KB (%QX15.15.63)				
	Direct variables	M	16 KB (up to 8 KB configurable as retain memory)				
		R	20 KB (1 block)				
		W	20 KB				Same area as R
	Flag variables	F	2 KB				System flags
		K	8 KB				Built-in special function flags
		L	4 KB				High-speed link flags
		N	10 KB				P2P flags
		U	1 KB				Analog flags
Flash area			20 KB, 2 blocks				Uses the R device
Timer			No limit on number of timers Time range: 0.001–4,294,967,295 s				20 bytes per timer/counter in the symbolic variable area
Counter			No limit on number of counters Count range: 64-bit representation				
Operation mode			RUN, STOP, DEBUG				
Restart mode			Cold, Warm				
Total program blocks			128				
Task	Initial task		1				
	Cyclic task		8				
	I/O task		8 (%IX0.0.0–%IX0.0.7)				
	Internal device task		8				
Program port							
Built-in functions			RS-232C and RS-485 (1 channel each), pulse catch, input filter, external input interrupt, high-speed counter, positioning Note 2)				
Self-diagnosis function			Detects errors in scan time, memory and I/O				
Back-up method			Latch area setting in basic parameters				
Max. expansion modules			10				
Internal consumption current			660 mA	260 mA	1,040 mA	330 mA	
Weight			600 g	500 g	900 g	800 g	
Current capacity Note 1)			2 A	2 A	3 A	3 A	

Note 1) Current capacity is the maximum output current of the XEC's built-in 5 V DC power supply board.
The total internal current consumption of the XEC and connected expansion modules must not exceed this capacity.
Note 2) The built-in positioning function is available only for transistor-output models.

System configuration

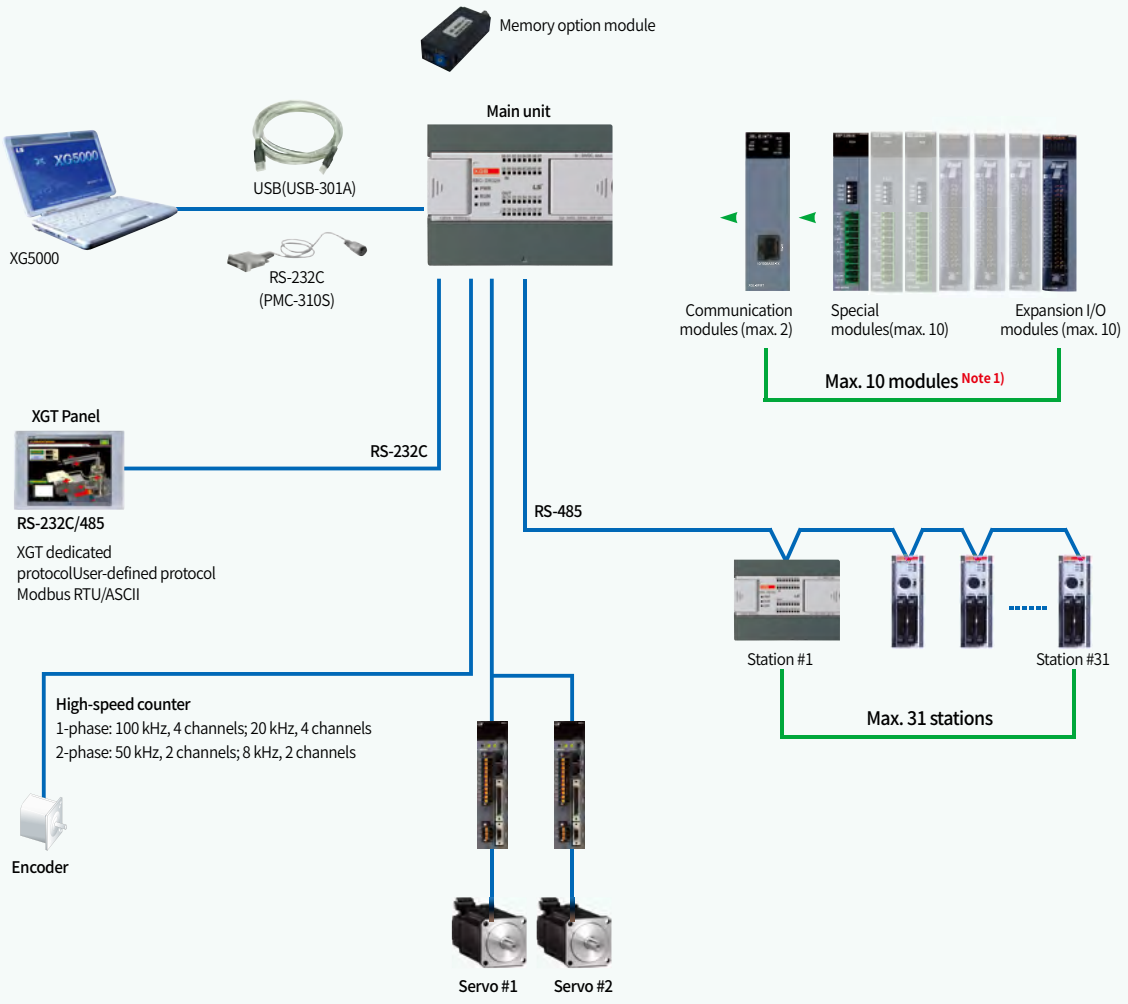

Note 1) The numbers in parentheses indicate the maximum number of modules of each type that can be installed.
The total number of modules connected to one main unit is limited to 10.

XBC-DN/DR32H, XEC-DN/DR/DP32H Input (Source/Sink type)

Circuit configuration	NO.	Contact	NO.	Contact	Terminal layout
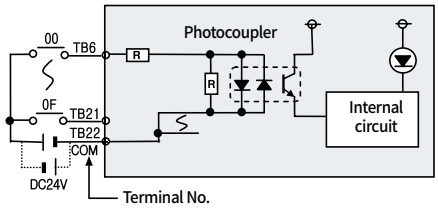	TB2	485+	TB1	RX	
	TB4	485-	TB3	TX	
	TB6	00	TB5	SG	
	TB8	02	TB7	01	
	TB10	04	TB9	03	
	TB12	06	TB11	05	
	TB14	08	TB13	07	
	TB16	0A	TB15	09	
	TB18	0C	TB17	0B	
	TB20	0E	TB19	0D	
	TB22	COM	TB21	0F	
	TB24	24V	TB23	24G	

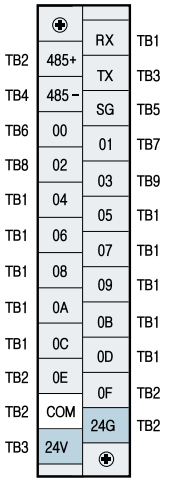

XBC-DR32H, XEC-DR32H Relay output type

Circuit configuration	NO.	Contact	NO.	Contact	Terminal layout
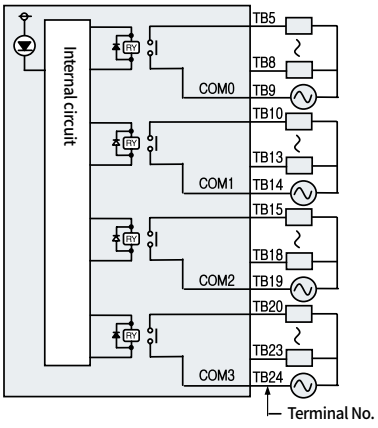	TB2	PE	TB1	Power	
	TB4	NC	TB3		
	TB6	21	TB5	20	
	TB8	23	TB7	22	
	TB10	24	TB9	C0M0	
	TB12	26	TB11	25	
	TB14	C0M1	TB13	27	
	TB16	29	TB15	28	
	TB18	28	TB17	2A	
	TB20	2C	TB19	C0M2	
	TB22	2E	TB21	2D	
	TB24	C0M3	TB23	2F	

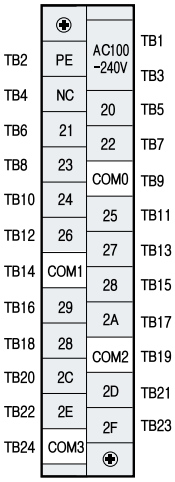

XBC-DN32H, XEC-DN32H Transistor output (Sink type)

Circuit configuration	NO.	Contact	NO.	Contact	Terminal layout
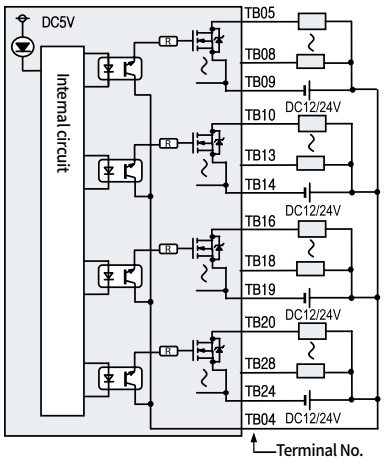	TB2	PE	TB1	Power	
	TB4	DC12/24V	TB3		
	TB6	21	TB5	20	
	TB8	23	TB7	22	
	TB10	24	TB9	C0M0	
	TB12	26	TB11	25	
	TB14	C0M1	TB13	27	
	TB16	29	TB15	28	
	TB18	28	TB17	2A	
	TB20	2C	TB19	C0M2	
	TB22	2E	TB21	2D	
	TB24	C0M3	TB23	2F	

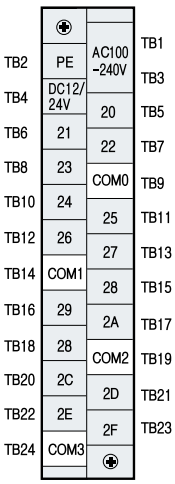

* XBC inputs (P00–P1F) are designated as XEC inputs (I00–I31). * XBC outputs (P20–P3F) are designated as XEC outputs (Q00–Q31).

XEC-DP32H Tr Transistor output (Sink type)

Circuit configuration

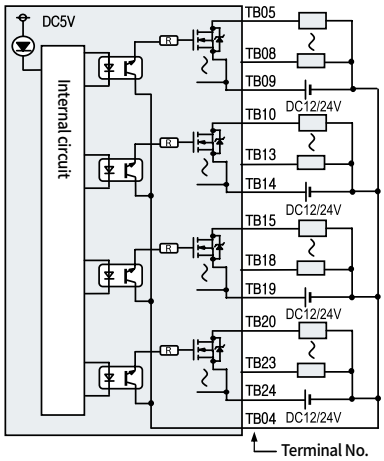

NO.	Contact	NO.	Contact
TB2	PE	TB1	Power
TB4	DC12/24V	TB3	
TB6	21	TB5	20
TB8	23	TB7	22
TB10	24	TB9	C0M0
TB12	26	TB11	25
TB14	C0M1	TB13	27
TB16	29	TB15	28
TB18	28	TB17	2A
TB20	2C	TB19	C0M2
TB22	2E	TB21	2D
TB24	C0M3	TB23	2F

Terminal layout

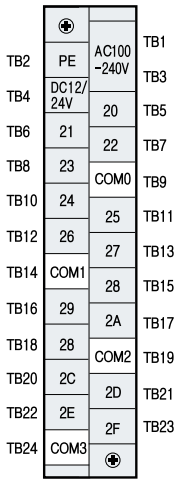

XBC-DN/DR64H, XEC-DN/DR/DP64H Input (Source/Sink type)

Circuit configuration

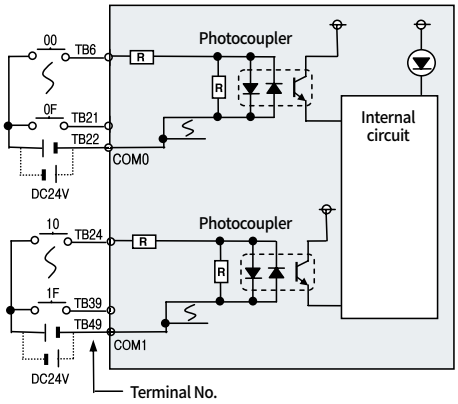

NO.	Contact	NO.	Contact
TB2	485+	TB1	RX
TB4	485-	TB3	TX
TB6	00	TB5	SG
TB8	02	TB7	01
TB10	04	TB9	03
TB12	06	TB11	05
TB14	08	TB13	07
TB16	0A	TB15	09
TB18	0O	TB17	0B
TB20	0E	TB19	0D
TB22	C0M0	TB21	0F
TB24	10	TB23	NC
TB26	12	TB25	11
TB28	14	TB27	13
TB30	16	TB29	15
TB32	18	TB31	17
TB34	1A	TB33	19
TB36	1C	TB35	1B
TB38	1E	TB37	1D
TB40	C0M1	TB39	1F
TB42	24V	TB41	24G

Terminal layout

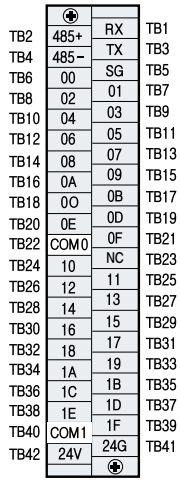

XBC/XEC-DR64H Relay output

Circuit configuration

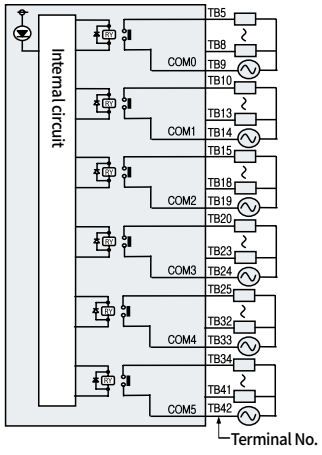

NO.	Contact	NO.	Contact
TB2	PE	TB1	Power
TB4	NC	TB3	
TB6	21	TB5	20
TB8	23	TB7	22
TB10	24	TB9	COM0
TB12	26	TB11	25
TB14	COM1	TB13	27
TB16	29	TB15	28
TB18	2B	TB17	2A
TB20	2C	TB19	COM2
TB22	2E	TB21	2D
TB24	COM2	TB23	2F
TB26	31	TB25	30
TB28	33	TB27	32
TB30	35	TB29	34
TB32	37	TB31	36
TB34	38	TB33	COM4
TB36	3A	TB35	39
TB38	3C	TB37	38
TB40	3E	TB39	3D
TB42	COM5	TB41	3F

Terminal layout

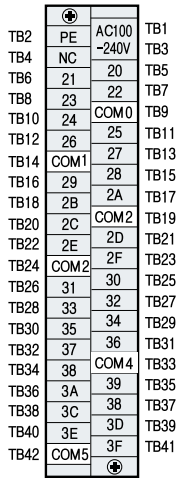

* XBC inputs (P00–P1F) are designated as XEC inputs (I00–I31). * XBC outputs (P20–P3F) are designated as XEC outputs (Q00–Q31).

XBC-DN64H, XEC-DN64H Transistor output (Sink type)

Circuit configuration

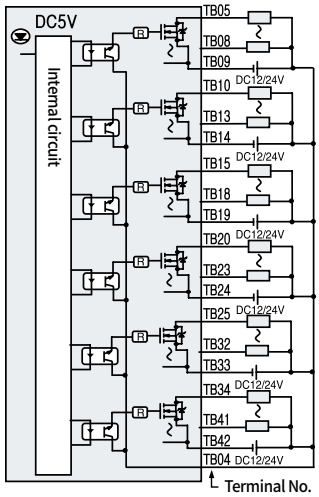

NO.	Contact	NO.	Contact
		TB1	Power
TB2	PE	TB3	
TB4	DC12/24V	TB5	20
TB6	21	TB7	22
TB8	23	TB9	COM0
TB10	24	TB11	25
TB12	26	TB13	27
TB14	COM1	TB15	28
TB16	29	TB17	2A
TB18	2B	TB19	COM2
TB20	2C	TB21	2D
TB22	2E	TB23	2F
TB24	COM2	TB25	30
TB26	31	TB27	32
TB28	33	TB29	34
TB30	35	TB31	36
TB32	37	TB33	COM4
TB34	38	TB35	39
TB36	3A	TB37	38
TB38	3C	TB39	3D
TB40	3E	TB41	3F
TB42	COM5		

Terminal layout

	⊕		
TB2	PE	AC100 –240V	TB1
TB4	DC12/24V		TB3
TB6	21	20	TB5
TB8	23	22	TB7
TB10	24	COM0	TB9
TB12	26	25	TB11
TB14	COM1	27	TB13
TB16	29	28	TB15
TB18	2B	2A	TB17
TB20	2C	COM2	TB19
TB22	2E	2D	TB21
TB24	COM2	2F	TB23
TB26	31	30	TB25
TB28	33	32	TB27
TB30	35	34	TB29
TB32	37	36	TB31
TB34	38	COM4	TB33
TB36	3A	39	TB35
TB38	3C	38	TB37
TB40	3E	3D	TB39
TB42	COM5	3F	TB41
		⊕	

XEC-DP64H Tr Transistor output (Source type)

Circuit configuration

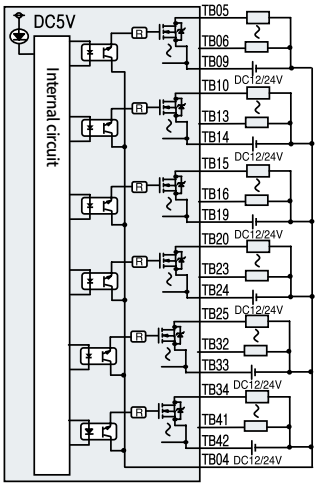

NO.	Contact	NO.	Contact
		TB1	Power
TB2	PE	TB3	
TB4	DC12/24V	TB5	20
TB6	21	TB7	22
TB8	23	TB9	COM0
TB10	24	TB11	25
TB12	26	TB13	27
TB14	COM1	TB15	28
TB16	29	TB17	2A
TB18	2B	TB19	COM2
TB20	2C	TB21	2D
TB22	2E	TB23	2F
TB24	COM2	TB25	30
TB26	31	TB27	32
TB28	33	TB29	34
TB30	35	TB31	36
TB32	37	TB33	COM4
TB34	38	TB35	39
TB36	3A	TB37	38
TB38	3C	TB39	3D
TB40	3E	TB41	3F
TB42	COM5		

Terminal layout

	⊕		
TB2	PE	AC100 –240V	TB1
TB4	DC12/24V		TB3
TB6	21	20	TB5
TB8	23	22	TB7
TB10	24	COM0	TB9
TB12	26	25	TB11
TB14	COM1	27	TB13
TB16	29	28	TB15
TB18	2B	2A	TB17
TB20	2C	COM2	TB19
TB22	2E	2D	TB21
TB24	COM2	2F	TB23
TB26	31	30	TB25
TB28	33	32	TB27
TB30	35	34	TB29
TB32	37	36	TB31
TB34	38	COM4	TB33
TB36	3A	39	TB35
TB38	3C	38	TB37
TB40	3E	3D	TB39
TB42	COM5	3F	TB41
		⊕	

* XBC inputs (P00–P1F) are designated as XEC inputs (I00–I31).
* XBC outputs (P20–P3F) are designated as XEC outputs (Q00–Q31).

I/O wiring

XBC-DN/DR32H, XEC-DN/DR/DP32H Input (Source/Sink type)

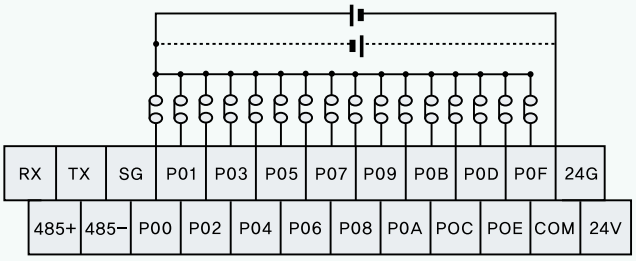

* XBC inputs (P00–P0F) are designated as XEC inputs (I00–I15).

XBC-DR32H / XEC-DR32H Relay output

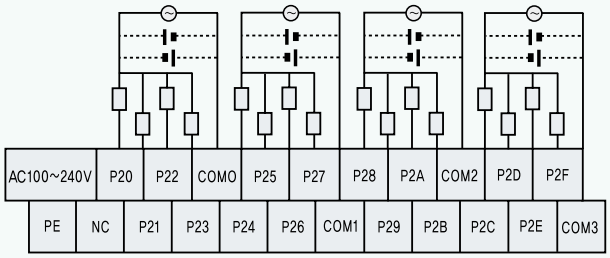

* XBC outputs (P20–P2F) are designated as XEC outputs (Q00–Q15).

XBC-DN32H / XEC-DN32H Transistor output (Sink type)

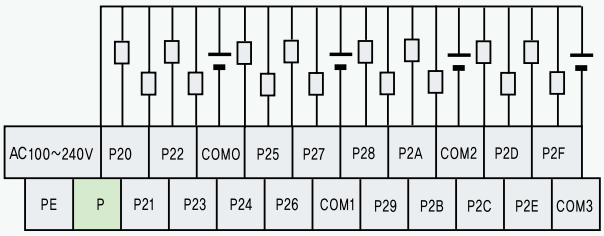

* XBC outputs (P20–P2F) are designated as XEC outputs (Q00–Q15).

XEC-DP32H Transistor output (Source type)

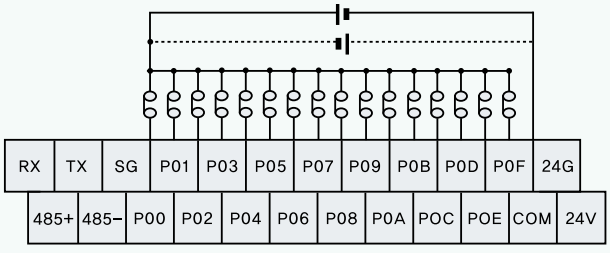

* XBC outputs (P20–P2F) are designated as XEC outputs (Q00–Q15).

XBC-DN/DR64H, XEC-DN/DR/DP64H Input (Source/Sink type)

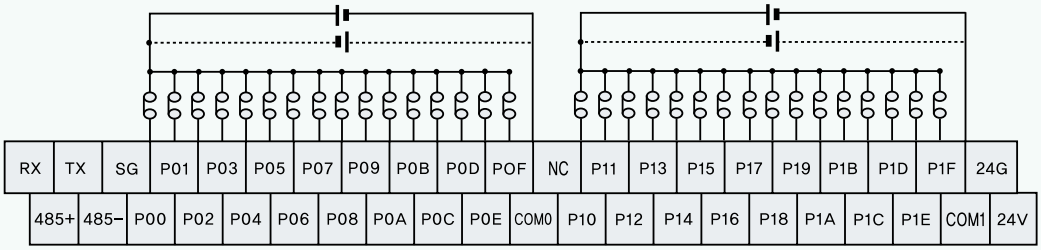

* XBC inputs (P00–P0F, P10-P1F) are designated as XEC inputs (I00–I15, I16-I31).

XBC-DR64H/XEC-DR64H Relay output

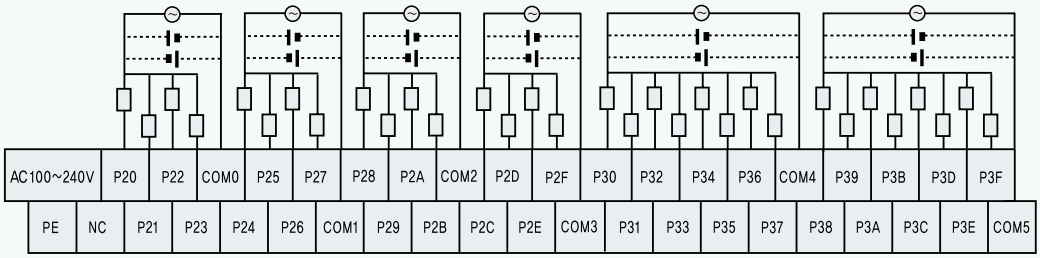

* XBC outputs (P20–P2F, P30~3PF) are designated as XEC outputs (Q00–Q15, Q16-Q31).

XBC-DN64H/XEC-DN64H Transistor output (Sink type)

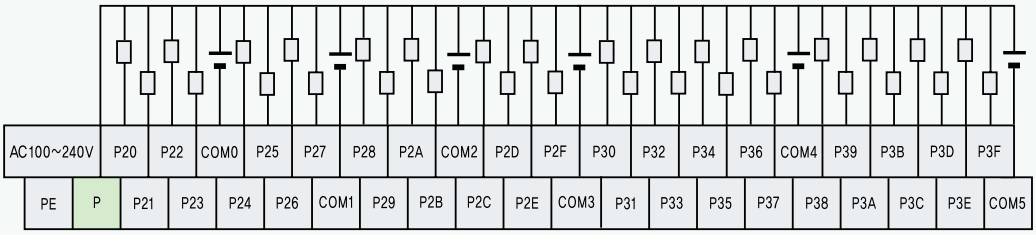

* XBC outputs (P20–P2F, P30~3PF) are designated as XEC outputs (Q00–Q15, Q16-Q31).

XEC-DP64H Transistor output (Source type)

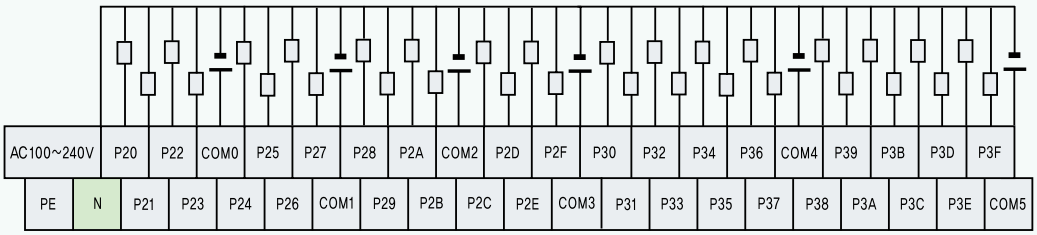

* XBC outputs (P20–P2F, P30~3PF) are designated as XEC outputs (Q00–Q15, Q16-Q31).

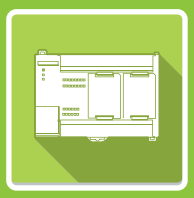

XBC/XEC SU Type

Standard

Contents

Main unit 38
Specifications 38
System configuration 39
I/O wiring 40




00 01 02 03 04 05 06 07 08 09 10 11 12 13 14 15 16 17
18 19 20 21 22 23 24 25 26 27 28 29 30 31 32 33 34 35
IN
OUT
00 01 02 03 04 05 06 07 08 09 10 11
12 13 14 15 16 17 18 19 20 21 22 23
XBO-TN04A
BATTERY
XBO-RTCA

Performance specifications (XBC "SU" type)

Items		XBC-DR20SU XBC-DN20SU XBC-DP20SU	XBC-DR30SU XBC-DN30SU XBC-DP30SU	XBC-DR40SU XBC-DN40SU XBC-DP40SU	XBC-DR60SU XBC-DN60SU XBC-DP60SU
Control method		Repetitive, cyclic, interrupt, constant scan			
I/O control method		Scan synchronous batch processing method (Refresh method), Directed by program instruction			
Program language		Ladder Diagram, Instruction List			
Number ofinstructions	Basic	28			
	Application	687			
Processing speed (Basic instruction)		OS Ver. 5.00 or higher: 60 ns/step OS Ver. below 5.00: 94 ns/step			
Program capacity		15 kstep			
Max. I/O points		244 points (Main + 7 expansion units)	254 points (Main + 7 expansion units)	264 points (Main + 7 expansion units)	284 points (Main + 7 expansion units)
Data area	P	P0000 ~ P1023F (16,384 points)			
	M	M0000 ~ M1023F (16,384 points)			
	K	K0000 ~ K4095F (65,536 points)			
	L	L0000 ~ L2047F (32,768 points)			
	F	F0000 ~ F1023F (16,384 points)			
	T	100 ms, 10 ms, 1 ms: T0000 ~ T1023 (1,024 points) (Adjustable by parameter setting)			
	C	C0000 ~ C1023 (1,024 points)			
	S	S00.00 ~ S127.99			
	D	D0000 ~ D10239 (10,240 words)			
	U	U0.0 ~ U0A.31 (352 words, Analog data refresh area)			
	Z	Z000 ~ Z127 (128 words)			
	R	R0000 ~ R10239 (10,240 words)			
Total program		128			
Initial task		1			
Cyclic task		Max. 8			
I/O task		Max. 8			
Internal device task		Max. 8			
Operation mode		RUN, STOP, DEBUG			
Self-diagnosis function		Detects errors of scan time, memory and I/O			
Program port		RS-232C: 1 channel, USB: 1 channel			
Built-in functions		RS-232C and RS-485 (1 channel each), Pulse catch, Input filter, External interrupt, High-speed counter, Positioning Note 1)			
Retain data at power failure		Latch area setting in basic parameter			
Internal consumptioncurrent		478 mA	626 mA	684 mA	942 mA
		252 mA	310 mA	288 mA	340 mA
		305 mA	352 mA	355 mA	394 mA
Weight		514 g	528 g	594 g	804 g
		475 g	476 g	578 g	636 g
		442 g	446 g	544 g	717 g

Note 1) Built-in positioning is available only for transistor-output (TR) models.

Performance specifications (XEC "SU" type)

Items			XEC-DR20SU / XEC-DN20SU / XEC-DP20SU	XEC-DR30SU / XEC-DN30SU / XEC-DP30SU	XEC-DR40SU / XEC-DN40SU / XEC-DP40SU	XEC-DR60SU / XEC-DN60SU / XEC-DP60SU	Remarks
Control method			Repetitive, cyclic, interrupt, constant scan				
I/O control method			Scan synchronous batch processing method (Refresh method), Directed by program instruction				
Program language			Ladder Diagram (LD), Sequential Function Chart (SFC),Structured Text (ST)				
Number of instructions	Operator		18				
	Basic function		136 + Floating-point Arithmetic Functions				
	Basic function block		43				
	Special function block		Dedicated functions for special features				
Processing speed			OS Ver. 5.00 or higher: 60 ns/step OS Ver. below 5.00: 94 ns/step				
Program capacity			OS Ver. 5.00 or higher: 250 KB; below 5.00: 200 KB (Max. capacity equivalent to 110 KB on XGI)				
Max. I/O points			244 points	254 points	264 points	284 points	
Data memory	Automatic variable (A)		16 KB				
	Input variable (I)		2 KB (%I×15.15.63)				
	Output variable (Q)		2 KB (%Q×15.15.63)				
	Direct variable	M	8 KB				
		R	20 KB (1 block)				
		W	20 KB				Same area as R
	Flag variable	F	2 KB				System flag
		K	8 KB				Built-in special flag
		L	4 KB				High-speed link flag
		U	1 KB				P2P flag
Flash area			20 KB, 2 blocks				Uses R device
Timer			No limit in points (Time range: 0.001 ~ 4,294,967,295)				20 bytes of automatic variable area per point
Counter			No limit in points (Count range: 64-bit range)				
Operation mode			RUN, STOP, DEBUG				
Restart mode			Cold, Warm				
Total number ofprogram blocks			128				
Task	Initialization		1				
	Cyclic		8				
	External input		8 (%I×0.0.0~%I×0.0.7)				
	Internal device		8				
Program port							
Built-in functions			RS-232C and RS-485 (1 channel each), Pulse catch, Input filter, External interrupt, High-speed counter, Positioning Note 1)				
Self-diagnosis function			Detects errors of scan time, memory and I/O				
Retain data at power failure			Latch area setting in basic parameter				
Internal consumption current			252 mA	270 mA	288 mA	340 mA	
			478 mA	626 mA	684 mA	942 mA	
			305 mA	352 mA	355 mA	394 mA	

Note 1) Built-in positioning is available only for transistor-output (TR) models.

System configuration

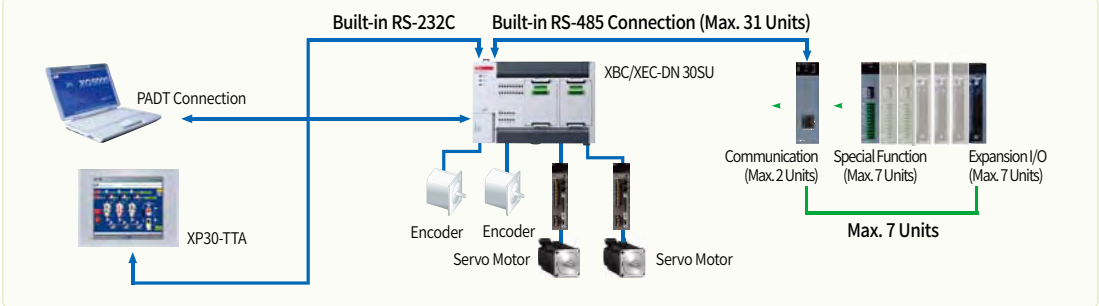

XBC/XEC-DR20SU, XBC/XEC-DN20SU, XBC/XEC-DP20SU Input (Source/Sink type)

Circuit configuration

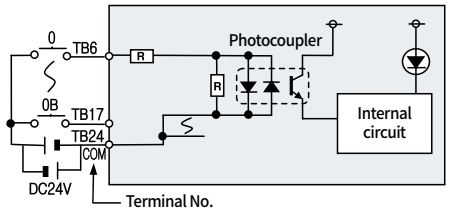

NO.	Contact	NO.	Contact
TB2	485+	TB1	RX
TB4	485-	TB3	TX
TB6	00	TB5	SG
TB8	02	TB7	01
TB10	04	TB9	03
TB12	06	TB11	05
TB14	08	TB13	07
TB16	0A	TB15	09
TB18	NC	TB17	0B
TB20	NC	TB19	NC
TB22	NC	TB21	NC
TB24	COM	TB23	NC

Terminal layout

	⊕		
TB2	485+	RX	TB1
TB4	485-	TX	TB3
TB6	00	SG	TB5
TB8	02	01	TB7
TB10	04	03	TB9
TB12	06	05	TB11
TB14	08	07	TB13
TB16	0A	09	TB15
TB18	NC	0B	TB17
TB20	NC	NC	TB19
TB22	NC	NC	TB21
TB24	COM	NC	TB23
		⊕	

XBC/XEC-DR20SU Relay output

Circuit configuration

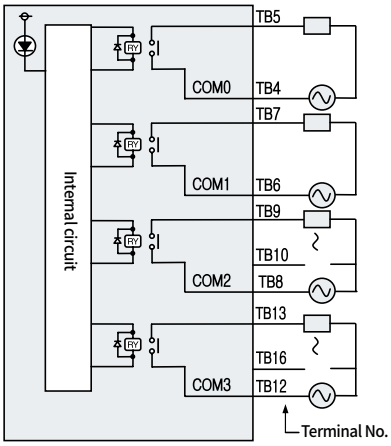

NO.	Contact	NO.	Contact
TB2	485+	TB1	AC100 -240V
TB4	485-	TB3	
TB6	00	TB5	40
TB8	02	TB7	41
TB10	04	TB9	42
TB12	06	TB11	NC
TB14	08	TB13	44
TB16	0A	TB15	46
TB18	NC	TB17	NC
TB20	NC	TB19	NC
TB22	NC	TB21	NC
TB24	COM	TB23	24V

Terminal layout

	⊕		
TB2	PE	AC100 -240V	TB1
TB4	COM0		TB3
TB6	COM1	40	TB5
TB8	COM2	41	TB7
TB10	43	42	TB9
TB12	COM3	NC	TB11
TB14	45	44	TB13
TB16	47	46	TB15
TB18	NC	NC	TB17
TB20	NC	NC	TB19
TB22	NC	NC	TB21
TB24	24G	24V	TB23
		⊕	

XBC/XEC-DN20SU Transistor output (Sink type)

Circuit configuration

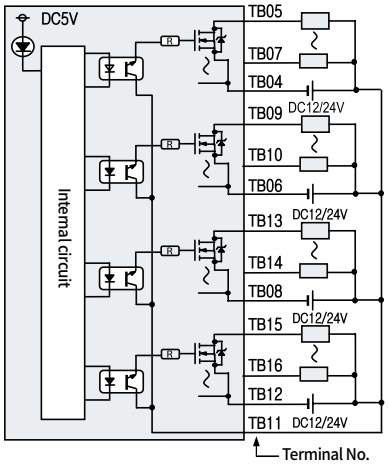

NO.	Contact	NO.	Contact
TB2	PE	TB1	AC100 -240V
TB4	COM0	TB3	
TB6	COM1	TB5	40
TB8	COM2	TB7	41
TB10	43	TB9	42
TB12	COM3	TB11	P
TB14	45	TB13	44
TB16	47	TB15	46
TB18	NC	TB17	NC
TB20	NC	TB19	NC
TB22	NC	TB21	NC
TB24	24G	TB23	24V

Terminal layout

	⊕		
TB2	PE	AC100 -240V	TB1
TB4	COM0		TB3
TB6	COM1	40	TB5
TB8	COM2	41	TB7
TB10	43	42	TB9
TB12	COM3	P	TB11
TB14	45	44	TB13
TB16	47	46	TB15
TB18	NC	NC	TB17
TB20	NC	NC	TB19
TB22	NC	NC	TB21
TB24	24G	24V	TB23
		⊕	

* XBC inputs (P00–P23) are designated as XEC inputs (I00–I35). * XBC outputs (P40–P57) are designated as XEC outputs (Q00–Q23).

XEC-DP32H Transistor output (Source type)

Circuit configuration

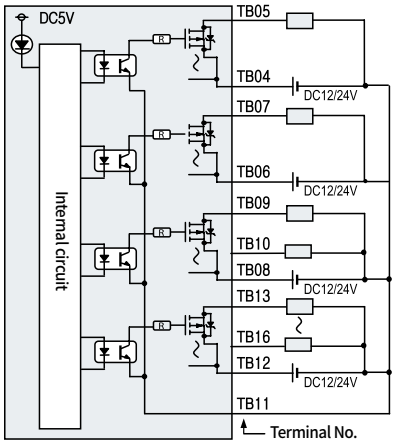

NO.	Contact	NO.	Contact
TB2	PE	TB1	AC100 -240V
TB4	COM0	TB3	
TB6	COM1	TB5	00
TB8	COM2	TB7	01
TB10	03	TB9	02
TB12	COM3	TB11	N
TB14	05	TB13	04
TB16	07	TB15	06
TB18	NC	TB17	NC
TB20	NC	TB19	NC
TB22	NC	TB21	NC
TB24	24G	TB23	24V

Terminal layout

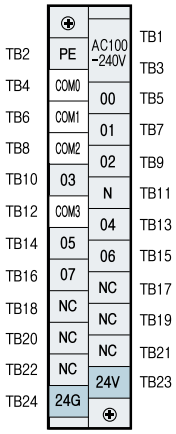

XBC/XEC-DR30SU, XBC/XEC-DN30SU, XBC/XEC-DP30SU Input (Source/Sink type)

Circuit configuration

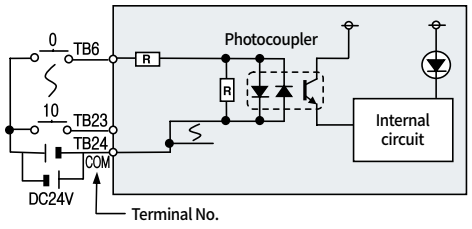

NO.	Contact	NO.	Contact
TB2	485+	TB1	RX
TB4	485-	TB3	TX
TB6	00	TB5	SG
TB8	02	TB7	01
TB10	04	TB9	03
TB12	06	TB11	05
TB14	08	TB13	07
TB16	0A	TB15	09
TB18	0C	TB17	0B
TB20	0E	TB19	0D
TB22	10	TB21	0F
TB24	COM	TB23	11

Terminal layout

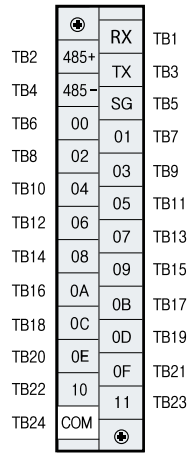

XBC/XEC-DR30SU Relay output

Circuit configuration

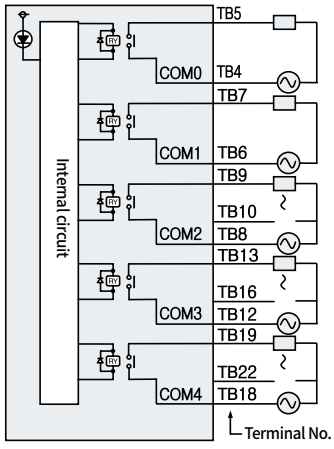

NO.	Contact	NO.	Contact
TB2	PE	TB1	AC100 -240V
TB4	COM0	TB3	
TB6	COM1	TB5	40
TB8	COM2	TB7	41
TB10	43	TB9	42
TB12	COM3	TB11	NC
TB14	45	TB13	44
TB16	47	TB15	46
TB18	COM4	TB17	NC
TB20	49	TB19	48
TB22	4B	TB21	4A
TB24	24G	TB23	24V

Terminal layout

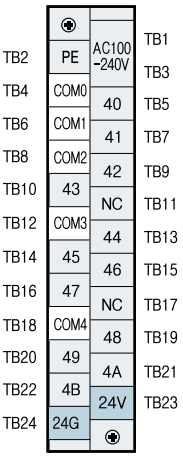

* XBC inputs (P00–P23) are designated as XEC inputs (I00–I35). * XBC outputs (P40–P57) are designated as XEC outputs (Q00–Q23).

XBC/XEC-DN30SU Tr Transistor output (Sink type)

Circuit configuration

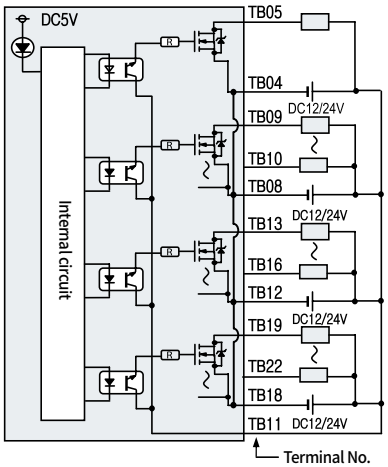

NO.	Contact	NO.	Contact
TB2	PE	TB1	AC100 -240V
TB4	COM0	TB3	
TB6	COM1	TB5	40
TB8	COM2	TB7	41
TB10	43	TB9	42
TB12	COM3	TB11	P
TB14	45	TB13	44
TB16	47	TB15	46
TB18	COM4	TB17	NC
TB20	49	TB19	48
TB22	4B	TB21	4A
TB24	24G	TB23	24V

Terminal layout

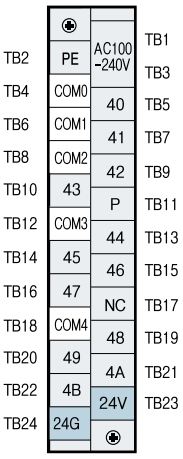

* Output COM terminals are internally connected to each other.

XBC/XEC-DP30SU Transistor output (Source type)

Circuit configuration

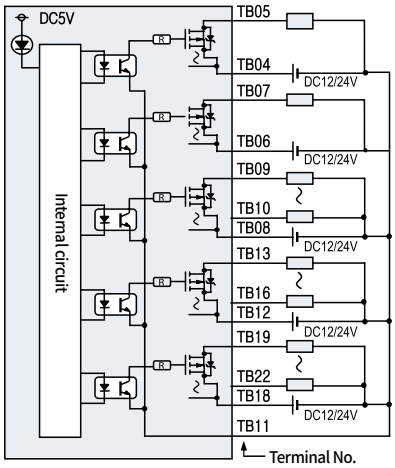

NO.	Contact	NO.	Contact
TB2	PE	TB1	AC100 -240V
TB4	COM0	TB3	
TB6	COM1	TB5	00
TB8	COM2	TB7	01
TB10	03	TB9	02
TB12	COM3	TB11	N
TB14	05	TB13	04
TB16	07	TB15	06
TB18	COM4	TB17	NC
TB20	09	TB19	08
TB22	11	TB21	10
TB24	24G	TB23	24V

Terminal layout

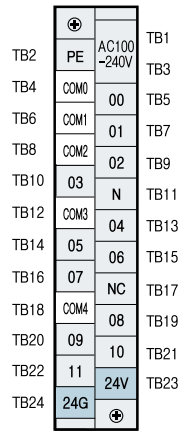

XBC/XEC-DR40SU, XBC/XEC-DN40SU, XBC/XEC-DP40SU Input (Source/Sink type)

Circuit configuration

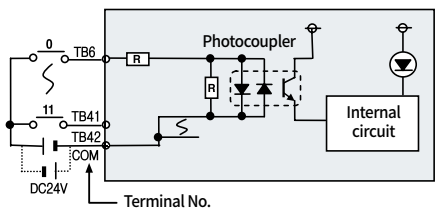

NO.	Contact	NO.	Contact
TB2	485+	TB1	RX
TB4	485-	TB3	TX
TB6	00	TB5	SG
TB8	02	TB7	01
TB10	04	TB9	03
TB12	06	TB11	05
TB14	08	TB13	07
TB16	0A	TB15	09
TB18	0C	TB17	0B
TB20	0E	TB19	0D
TB22	10	TB21	0F
TB24	12	TB23	11
TB26	14	TB25	13
TB28	16	TB27	15
TB30	COM	TB29	17

Terminal layout

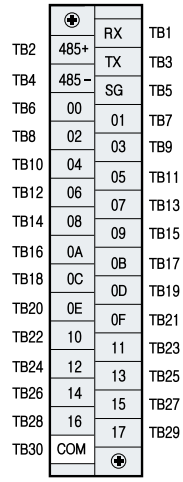

* XBC inputs (P00–P23) are designated as XEC inputs (I00–I35). * XBC outputs (P40–P57) are designated as XEC outputs (Q00–Q23).

XBC/XEC-DR40SU Relay output

Circuit configuration	NO.	Contact	NO.	Contact	Terminal layout
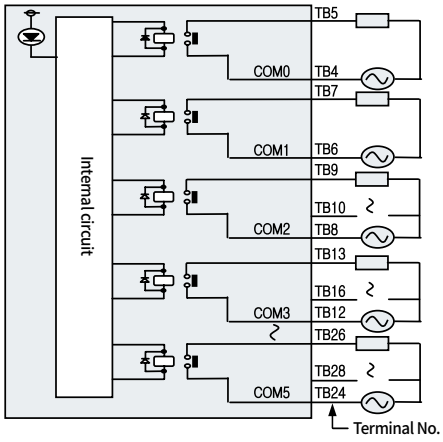	TB2	PE	TB1	AC100 -240V	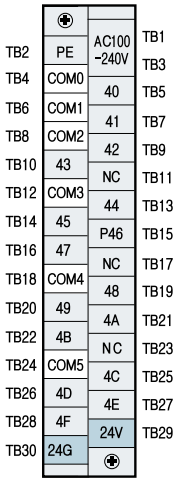
	TB4	C0M0	C0M0		
	TB6	C0M1	C0M2	40	
	TB8	C0M2	COM3	41	
	TB10	43	47	42	
	TB12	COM3	49	NC	
	TB14	45	COM5	44	
	TB16	47	4F	46	
	TB18	COM4	TB17	NC	
	TB20	49	TB19	48	
	TB22	4B	TB21	4A	
	TB24	COM5	TB23	NC	
	TB26	4D	TB25	4C	
	TB28	4F	TB27	4E	
	TB30	24G	TB29	24V	

XBC/XEC-DN40SU Transistor output (Sink type)

Circuit configuration	NO.	Contact	NO.	Contact	Terminal layout
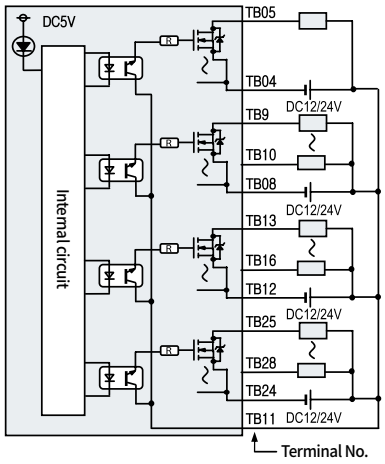	TB2	PE	TB1	AC100 -240V	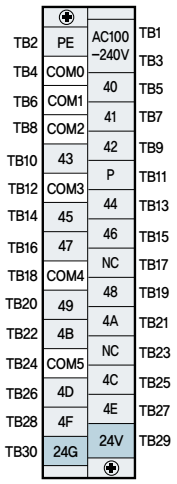
	TB4	C0M0	TB3		
	TB6	C0M1	TB5	40	
	TB8	C0M2	TB7	41	
	TB10	43	TB9	42	
	TB12	COM3	TB11	P	
	TB14	45	TB13	44	
	TB16	47	TB15	46	
	TB18	COM4	TB17	NC	
	TB20	49	TB19	48	
	TB22	4B	TB21	4A	
	TB24	COM5	TB23	NC	
	TB26	4D	TB25	4C	
	TB28	4F	TB27	4E	
	TB30	24G	TB29	24V	

XBC/XEC-DP40SU Transistor output (Source type)

Circuit configuration	NO.	Contact	NO.	Contact	Terminal layout
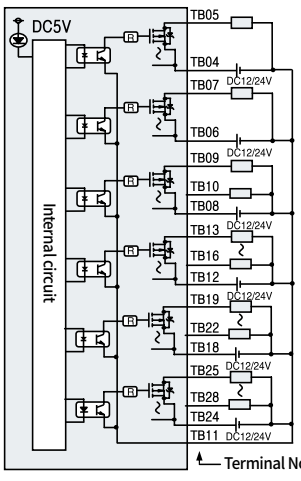	TB2	PE	TB1	AC100 -240V	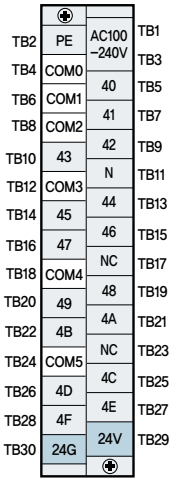
	TB4	C0M0	TB3		
	TB6	C0M1	TB5	40	
	TB8	C0M2	TB7	41	
	TB10	43	TB9	42	
	TB12	COM3	TB11	N	
	TB14	45	TB13	44	
	TB16	47	TB15	46	
	TB18	COM4	TB17	NC	
	TB20	49	TB19	48	
	TB22	4B	TB21	4A	
	TB24	COM5	TB23	NC	
	TB26	4D	TB25	4C	
	TB28	4F	TB27	4E	
	TB30	24G	TB29	24V	

* XBC inputs (P00–P23) are designated as XEC inputs (I00–I35). * XBC outputs (P40–P57) are designated as XEC outputs (Q00–Q23).

XBC/XEC-DR60SU, XBC/XEC-DN60SU, XBC/XEC-DP60SU Input (Source/Sink type)

Circuit configuration

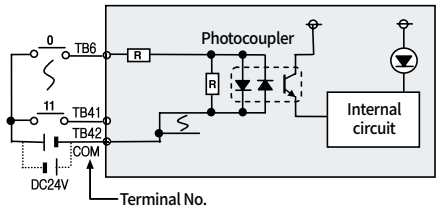

NO.	Contact	NO.	Contact
TB2	485+	TB1	RX
TB4	485-	TB3	TX
TB6	00	TB5	SG
TB8	02	TB7	01
TB10	04	TB9	03
TB12	06	TB11	05
TB14	08	TB13	07
TB16	0A	TB15	09
TB18	0C	TB17	0B
TB20	0E	TB19	0D
TB22	10	TB21	0F
TB24	12	TB23	11
TB26	14	TB25	13
TB28	16	TB27	15
TB30	18	TB29	17
TB32	1A	TB31	19
TB34	1C	TB33	1B
TB36	1E	TB35	1D
TB38	20	TB37	1F
TB40	22	TB39	21
TB42	COM	TB41	23

Terminal layout

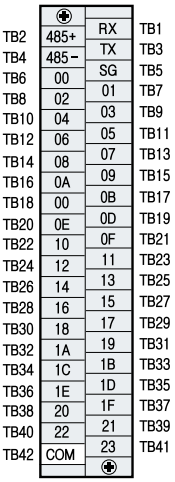

XBC/XEC-DR60SU Relay output

Circuit configuration

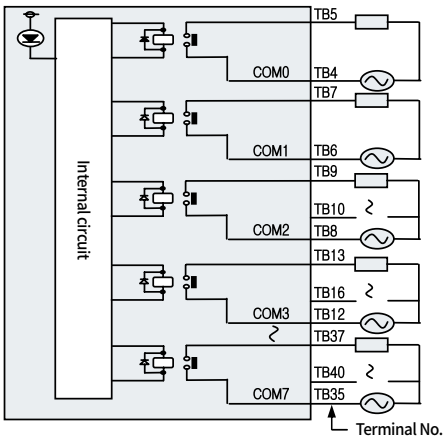

NO.	Contact	NO.	Contact
TB2	PE	TB1	AC100 -240V
TB4	COM0	TB3	
TB6	COM1	TB5	40
TB8	COM2	TB7	41
TB10	43	TB9	42
TB12	COM3	TB11	NC
TB14	45	TB13	44
TB16	47	TB15	46
TB18	COM4	TB17	NC
TB20	49	TB19	48
TB22	4B	TB21	4A
TB24	COM5	TB23	NC
TB26	4D	TB25	4C
TB28	4F	TB27	4E
TB30	COM6	TB29	NC
TB32	51	TB31	50
TB34	53	TB33	52
TB36	COM7	TB35	NC
TB38	55	TB37	54
TB40	57	TB39	56
TB42	24G	TB41	24V

Terminal layout

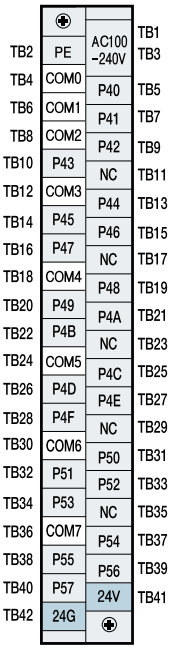

* XBC inputs (P00–P23) are designated as XEC inputs (I00–I35). * XBC outputs (P40–P57) are designated as XEC outputs (Q00–Q23).

XBC/XEC-DN60SU Transistor output (Sink type)

Circuit configuration

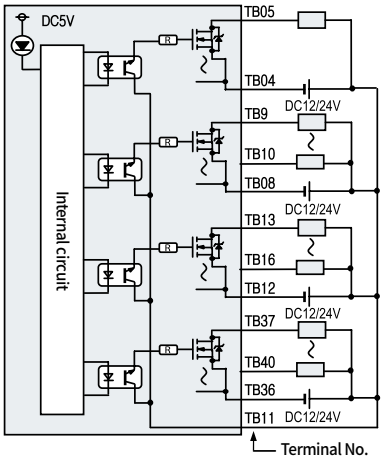

NO.	Contact	NO.	Contact
TB2	PE	TB1	AC100 -240V
TB4	COM0	TB3	
TB6	COM1	TB5	40
TB8	COM2	TB7	41
TB10	43	TB9	42
TB12	COM3	TB11	P
TB14	45	TB13	44
TB16	47	TB15	46
TB18	COM4	TB17	NC
TB20	49	TB19	48
TB22	4B	TB21	4A
TB24	COM5	TB23	NC
TB26	4D	TB25	4C
TB28	4F	TB27	4E
TB30	COM6	TB29	NC
TB32	51	TB31	50
TB34	53	TB33	52
TB36	COM7	TB35	NC
TB38	55	TB37	54
TB40	57	TB39	56
TB42	24G	TB41	24V

Terminal layout

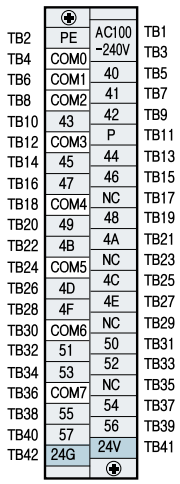

XBC/XEC-DP60SU Transistor output (Source type)

Circuit configuration

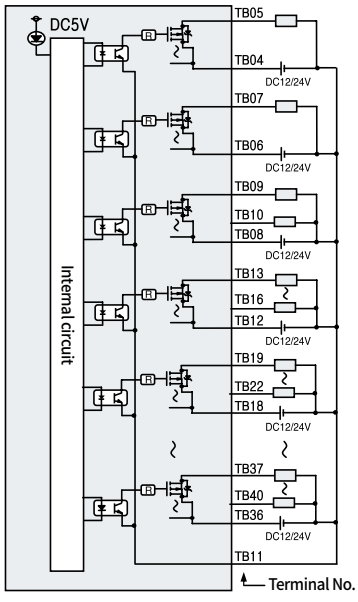

NO.	Contact	NO.	Contact
TB2	PE	TB1	AC100 -240V
TB4	COM0	TB3	
TB6	COM1	TB5	00
TB8	COM2	TB7	01
TB10	03	TB9	02
TB12	COM3	TB11	N
TB14	05	TB13	04
TB16	07	TB15	06
TB18	COM4	TB17	NC
TB20	09	TB19	08
TB22	11	TB21	10
TB24	COM5	TB23	NC
TB26	13	TB25	12
TB28	15	TB27	14
TB30	COM6	TB29	NC
TB32	17	TB31	16
TB34	19	TB33	18
TB36	COM7	TB35	NC
TB38	21	TB37	20
TB40	23	TB39	22
TB42	24G	TB41	24V

Terminal layout

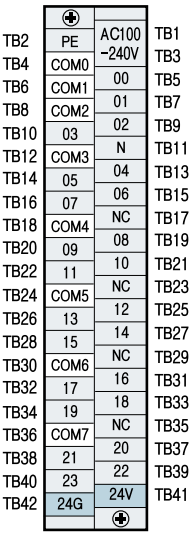

* XBC inputs (P00–P23) are designated as XEC inputs (I00–I35). * XBC outputs (P40–P57) are designated as XEC outputs (Q00–Q23).


XGB
XEC-DR20E
PWR
RUN
ERR
00 01 02 03 04 05
06 07 08 09 10 11
IN
OUT
00 01 02 03
04 05 06 07
CH0
CH1
XBO-TC02A

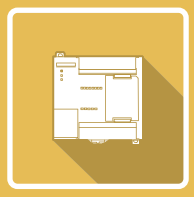

XBC/XEC E Type

Economic

Contents

Main unit 48
Specifications 48
System configuration 49
I/O wiring 50



Performance specifications (XBC "E" type)

Item		XBC-DR10E / XBC-DN10E / XBC-DP10E	XBC-DR14E / XBC-DN14E / XBC-DP14E	XBC-DR20E / XBC-DN20E / XBC-DP20E	XBC-DR30E / XBC-DN30E / XBC-DP30E
Operation method		Reiterative operation, Fixed cycle operation, Interrupt operation, Constant scan			
I/O control method		Scan synchronous batch processing method (Refresh method), Direct method by program instruction			
Program language		Ladder Diagram (LD), Instruction List (IL)			
Processing speed (Basic instruction)		240 ns/step			
Program memory capacity		4 Kstep			
Max. I/O points		14 points (Main unit + 1 option board)	18 points	28 points (Main unit + 2 option boards)	38 points
Operation mode		RUN, STOP, DEBUG			
Total programs		128			
Data area	P	P0000 ~ P127F (2,048 points)			
	M	M0000 ~ M255F (4,096 points)			
	K	K00000 ~ K2559F (Special area: K2600 ~ 2559F) (40,960 points)			
	L	L00000 ~ L1279F (20,480 points)			
	F	F000 ~ F255F (4,096 points)			
	T	100 ms, 10 ms, 1 ms: T000 ~ T255 (256 points) (Area allocation can be changed by parameter settings)			
	C	C000 ~ C255 (256 points)			
	S	S00.00 ~ S127.99			
	D	D0000 ~ D5119 (5,120 words)			
	U	U00.00 ~ U0A.31 (256 words, Analog data refresh area)			
	Z	Z000 ~ Z127 (128 words)			
Task	Initialization	1			
	Cyclic	Max. 8			
	External contact	Max. 4			
	Internal device	Max. 8			
Program port		RS-232C (1 channel)			
Self-diagnosis function		Operation delay detection (Watchdog), Memory error, I/O error			
Built-in function		RS-232C or RS-485 (1 channel), Pulse catch, Input filter, External interrupt, High-speed counter			
Data retention at power failure		Latch area set in the basic parameters			
Internal current consumption		250 mA 180 mA 180 mA	315 mA 19 mA 190 mA	355 mA 200 mA 200 mA	485 mA 210 mA 210 mA
Weight		330 g 313 g 313 g	340 g 315 g 315 g	450 g 418 g 418 g	465 g 423 g 423 g
Rated voltage		AC 100–240 V			

Performance specifications (XEC "E" type)

Item			XEC-DR10E / XEC-DN10E / XEC-DP10E	XEC-DR14E / XEC-DN14E / XEC-DP14E	XEC-DR20E / XEC-DN20E / XEC-DP20E	XEC-DR30E / XEC-DN30E / XEC-DP30E
Operation method			Reiterative operation, Fixed cycle operation, Interrupt operation, Constant scan			
I/O control method			Scan synchronous batch processing method (Refresh method), Direct method by program instruction			
Program language			Ladder Diagram (LD), Instruction List (IL)			
Processing speed (Basic instruction)			240 ns/step			
Program memory capacity			50 KB			
Max. I/O points			14 points (Main unit + 1 option board)	18 points	28 points (Main unit + 2 option boards)	38 points
Operation mode			RUN, STOP, DEBUG			
Total programs			128			
Data memory	Symbolic variable (A)		8 KB (Configurable up to 8 KB)			
	Input variable (I)		256 bytes			
	Output variable (Q)		256 bytes			
	Direct variable	M	4 KB			
		R	10 KB (1 block)			
		W	10 KB			
	Flag variable	F	768 bytes			
		K	5,120 bytes			
		L	2,560 bytes			
		U	704 bytes			
Task	Initialization		1			
	Cyclic		Max. 8			
	External input		Max. 4			
	Internal device		Max. 8			
Program port			RS-232C (1 channel)			
Built-in function			Operation delay detection (Watchdog), Memory error, I/O error			
Self-diagnosis function			RS-232C or RS-485 (1 channel), Pulse catch, Input filter, External interrupt, High-speed counter			
Data retention at power failure			Latch area set in the basic parameters			
Internal current consumption			250 mA / 180 mA / 180 mA	315 mA / 19 mA / 190 mA	355 mA / 200 mA / 200 mA	485 mA / 210 mA / 210 mA
Weight			330 g / 313 g / 313 g	340 g / 315 g / 315 g	450 g / 418 g / 418 g	465 g / 423 g / 423 g
Rated voltage			AC100 - 240V			

System configuration

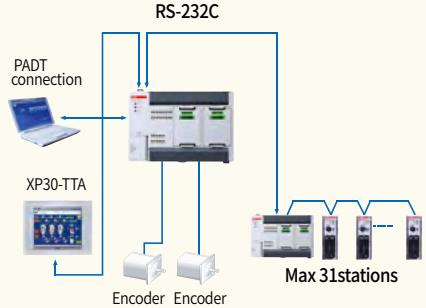

* RS-232C and RS-485 cannot be used simultaneously on XBC "E" type. Select either RS-232C or RS-485.

Option Board

Item	Model	No. of Input Channels	Input Type	No. of Output Channels	Output Type
DC input	XBO-DC04A	4	DC 24V	-	-
TR output	XBO-TN04A	-	-	4	DC 24V
Analog input	XBO-AD02A	2	Voltage/Current	-	-
Analog output	XBO-DA02A	-	-	2	Voltage/Current
Analog I/O	XBO-AH02A	1	Voltage/Current	1	Voltage/Current
RTD input	XBO-RD01A	1	PT100/JPT100	-	-
Thermocouple input	XBO-TC02A	2	K, J	-	-
RTC module	XBO-RTCA	-	-	-	-

Note) XBC "E" and "SU" types have no built-in RTC function and therefore no battery. (The RTC function can be used by installing the RTC option board.)

XBC/XEC-DR10E, XBC/XEC-DN10E, XBC/XEC-DP10E Input (Source/Sink type)

Circuit configuration

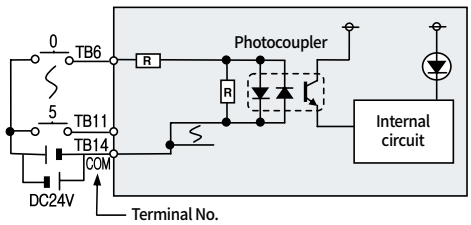

NO.	Contact	NO.	Contact
TB2	485+	TB1	RX
TB4	485-	TB3	TX
TB6	00	TB5	SG
TB8	02	TB7	01
TB10	04	TB9	03
TB12	NC	TB11	05
TB14	COM	TB13	NC

Terminal layout

	RX	TB1
TB2	485+	TB3
TB4	485-	TB5
TB6	00	TB7
TB8	02	TB9
TB10	04	TB11
TB12	NC	TB13
TB14	COM	

XBC/XEC-DR10E Relay output

Circuit configuration

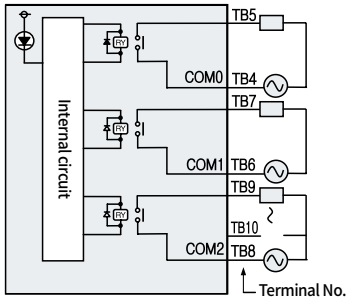

NO.	Contact	NO.	Contact
TB2	PE	TB1	AC100 -240V
TB4	COM0	TB3	
TB6	COM1	TB5	40
TB8	COM2	TB7	41
TB10	43	TB9	42
TB12	NC	TB11	NC
TB14	24G	TB13	24V

Terminal layout

	AC100 -240V	TB1
TB2	PE	TB3
TB4	COM0	TB5
TB6	COM1	TB7
TB8	COM2	TB9
TB10	43	TB11
TB12	NC	TB13
TB14	24G	TB15

XBC/XEC-DN10E Transistor output (Sink type)

Circuit configuration

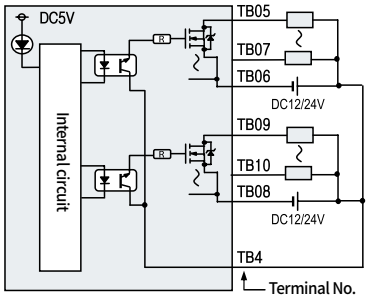

NO.	Contact	NO.	Contact
TB2	PE	TB1	AC100 -240V
TB4	P	TB3	
TB6	COM0	TB5	00
TB8	COM1	TB7	01
TB10	43	TB9	02
TB12	NC	TB11	NC
TB14	24G	TB13	24V

Terminal layout

	AC100 -240V	TB1
TB2	PE	TB3
TB4	P	TB5
TB6	COM0	TB7
TB8	COM1	TB9
TB10	03	TB11
TB12	NC	TB13
TB14	24G	

XBC/XEC-DP10E Transistor output (Source type)

Circuit configuration

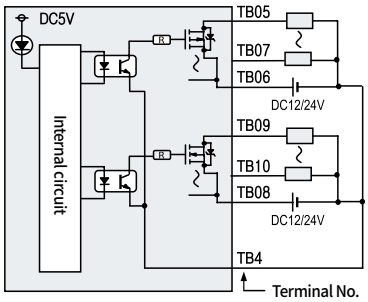

NO.	Contact	NO.	Contact
TB2	PE	TB1	AC100 -240V
TB4	N	TB3	
TB6	COM0	TB5	00
TB8	COM1	TB7	01
TB10	43	TB9	02
TB12	NC	TB11	NC
TB14	24G	TB13	24V

Terminal layout

	AC100 -240V	TB1
TB2	PE	TB3
TB4	N	TB5
TB6	COM0	TB7
TB8	COM1	TB9
TB10	03	TB11
TB12	NC	TB13
TB14	24G	

* XBC inputs (P00–P07) are designated as XEC inputs (I00–I07). * XBC outputs (P40–P47) are designated as XEC outputs (Q00–Q07).

XBC/XEC-DR14E, XBC/XEC-DN14E, XBC/XEC-DP14E Input (Source/Sink type)

Circuit configuration	NO.	Contact	NO.	Contact	Terminal layout
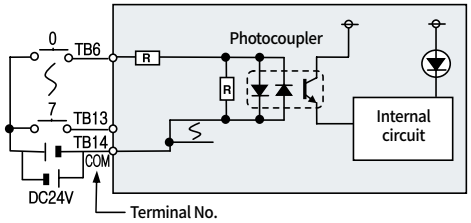	TB2	485+	TB1	RX	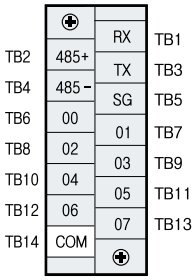
	TB4	485-	TB3	TX	
	TB6	00	TB5	SG	
	TB8	02	TB7	01	
	TB10	04	TB9	03	
	TB12	06	TB11	05	
	TB14	COM	TB13	07	

XBC-DR14E Relay output

Circuit configuration	NO.	Contact	NO.	Contact	Terminal layout
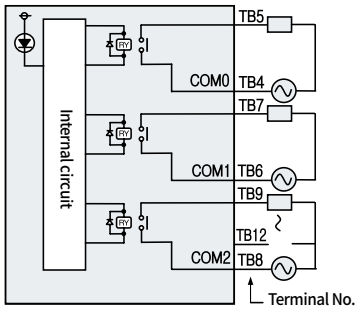	TB2	PE	TB1	AC100 -240V	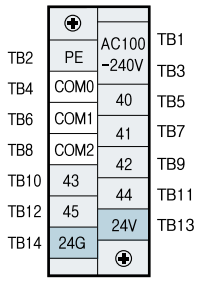
	TB4	COM0	TB3		
	TB6	COM1	TB5	40	
	TB8	COM2	TB7	41	
	TB10	43	TB9	42	
	TB12	45	TB11	44	
	TB14	24G	TB13	24V	

XBC/XEC-DN14E Transistor output (Sink type)

Circuit configuration	NO.	Contact	NO.	Contact	Terminal layout
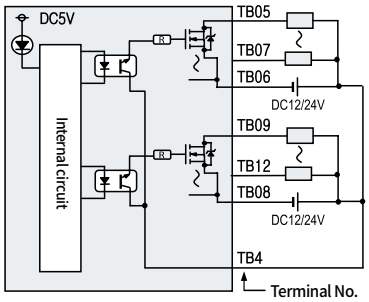	TB2	PE	TB1	AC100 -240V	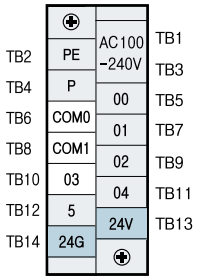
	TB4	P	TB3		
	TB6	COM0	TB5	00	
	TB8	COM1	TB7	01	
	TB10	03	TB9	02	
	TB12	05	TB11	04	
	TB14	24G	TB13	24V	

XBC/XEC-DP14E Transistor output (Source type)

Circuit configuration	NO.	Contact	NO.	Contact	Terminal layout
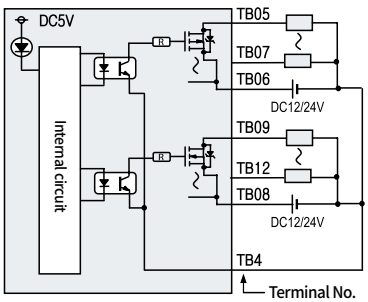	TB2	PE	TB1	AC100 -240V	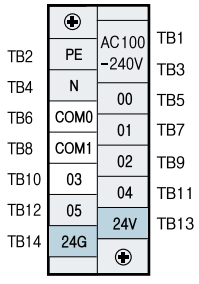
	TB4	N	TB3		
	TB6	COM0	TB5	00	
	TB8	COM1	TB7	01	
	TB10	03	TB9	02	
	TB12	05	TB11	04	
	TB14	24G	TB13	24V	

* XBC inputs (P00–P07) are designated as XEC inputs (I00–I07). * XBC outputs (P40–P47) are designated as XEC outputs (Q00–Q07).

XBC/XEC-DR20E, XBC/XEC-DN20E, XBC/XEC-DP20E Input (Source/Sink type)

Circuit configuration

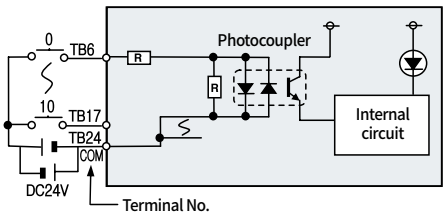

NO.	Contact	NO.	Contact
TB2	485+	TB1	RX
TB4	485-	TB3	TX
TB6	00	TB5	SG
TB8	02	TB7	01
TB10	04	TB9	03
TB12	06	TB11	05
TB14	08	TB13	07
TB16	0A	TB15	09
TB18	NC	TB17	0B
TB20	NC	TB19	NC
TB22	NC	TB21	NC
TB24	COM	TB23	NC

Terminal layout

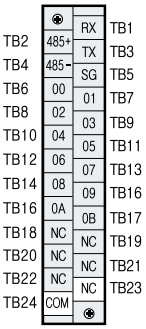

XBC-DR20E Relay output

Circuit configuration

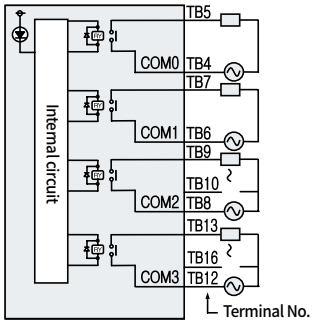

NO.	Contact	NO.	Contact
TB2	PE	TB1	AC100 -240V
TB4	COM0	TB3	
TB6	COM1	TB5	40
TB8	COM2	TB7	41
TB10	43	TB9	42
TB12	COM3	TB11	NC
TB14	45	TB13	44
TB16	47	TB15	46
TB18	NC	TB17	NC
TB20	NC	TB19	NC
TB22	NC	TB21	NC
TB24	24G	TB23	24V

Terminal layout

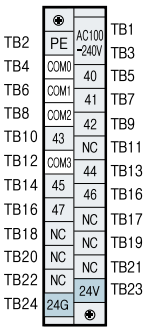

XBC/XEC-DN20E Transistor output (Sink type)

Circuit configuration

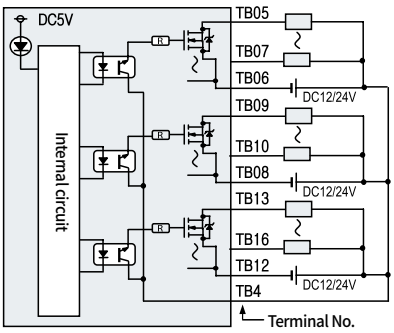

NO.	Contact	NO.	Contact
TB2	PE	TB1	AC100 -240V
TB4	P	TB3	
TB6	COM0	TB5	00
TB8	COM1	TB7	01
TB10	03	TB9	NC
TB12	COM2	TB11	04
TB14	05	TB13	06
TB16	07	TB15	NC
TB18	NC	TB17	NC
TB20	NC	TB19	NC
TB22	NC	TB21	NC
TB24	24G	TB23	24V

Terminal layout

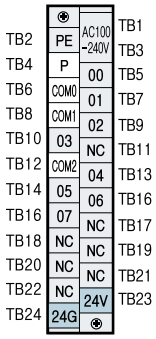

XBC/XEC-DP20E Transistor output (Source type)

Circuit configuration

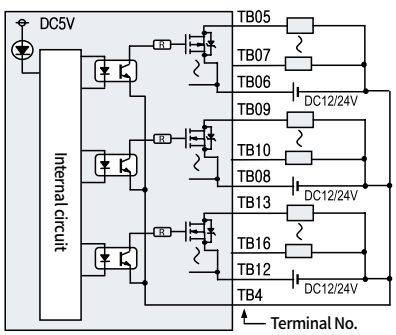

NO.	Contact	NO.	Contact
TB2	PE	TB1	AC100 -240V
TB4	N	TB3	
TB6	COM0	TB5	00
TB8	COM1	TB7	01
TB10	03	TB9	02
TB12	COM2	TB11	NC
TB14	05	TB13	04
TB16	07	TB15	06
TB18	NC	TB17	NC
TB20	NC	TB19	NC
TB22	NC	TB21	NC
TB24	24G	TB23	24V

Terminal layout

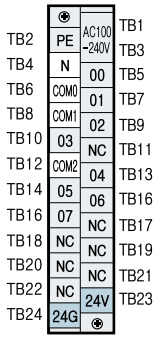

* XBC inputs (P00–P07) are designated as XEC inputs (I00–I07). * XBC outputs (P40–P47) are designated as XEC outputs (Q00–Q07).

XBC/XEC-DR30E, XBC/XEC-DN30E, XBC/XEC-DP30E Input (Source/Sink type)

Circuit configuration	NO.	Contact	NO.	Contact	Terminal layout
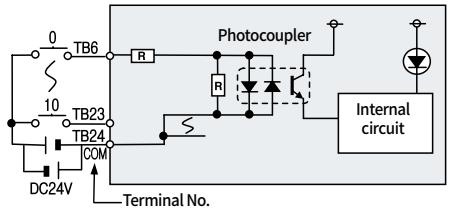	TB2	485+	TB1	RX	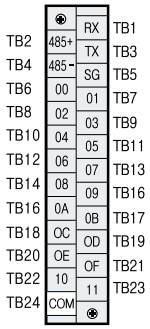
	TB4	485-	TB3	TX	
	TB6	00	TB5	SG	
	TB8	02	TB7	01	
	TB10	04	TB9	03	
	TB12	06	TB11	05	
	TB14	08	TB13	07	
	TB16	0A	TB15	09	
	TB18	OC	TB17	0B	
	TB20	OE	TB19	OD	
	TB22	10	TB21	OF	
	TB24	COM	TB23	11	

XBC-DR30E Relay output

Circuit configuration	NO.	Contact	NO.	Contact	Terminal layout
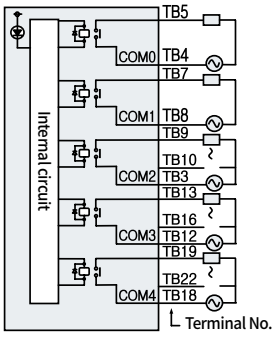	TB2	PE	TB1	AC100 -240V	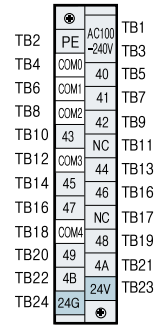
	TB4	COM0	TB3		
	TB6	COM1	TB5	40	
	TB8	COM2	TB7	41	
	TB10	43	TB9	42	
	TB12	COM3	TB11	NC	
	TB14	45	TB13	44	
	TB16	47	TB15	46	
	TB18	COM4	TB17	NC	
	TB20	49	TB19	48	
	TB22	4B	TB21	4A	
	TB24	24G	TB23	24V	

XBC/XEC-DN30E Transistor output (Sink type)

Circuit configuration	NO.	Contact	NO.	Contact	Terminal layout
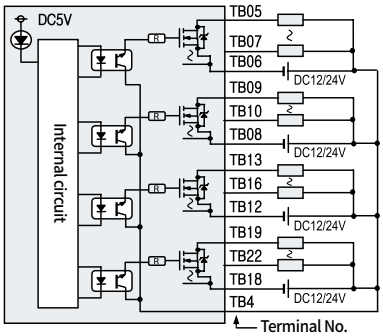	TB2	PE	TB1	AC100 -240V	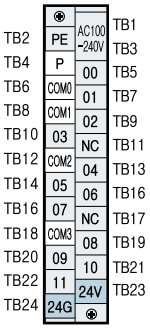
	TB4	P	TB3		
	TB6	COM0	TB5	00	
	TB8	COM1	TB7	01	
	TB10	03	TB9	02	
	TB12	COM2	TB11	NC	
	TB14	05	TB13	04	
	TB16	07	TB15	06	
	TB18	COM3	TB17	NC	
	TB20	09	TB19	08	
	TB22	11	TB21	10	
	TB24	24G	TB23	24V	

XBC/XEC-DP30E Transistor output (Source type)

Circuit configuration	NO.	Contact	NO.	Contact	Terminal layout
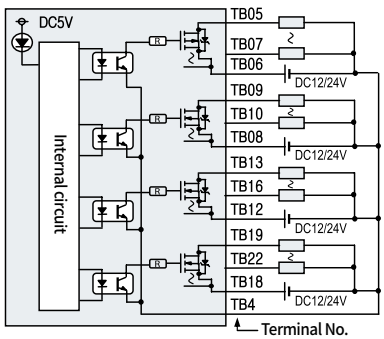	TB2	PE	TB1	AC100 -240V	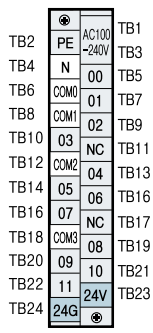
	TB4	N	TB3		
	TB6	COM0	TB5	00	
	TB8	COM1	TB7	01	
	TB10	03	TB9	02	
	TB12	COM2	TB11	NC	
	TB14	05	TB13	04	
	TB16	07	TB15	06	
	TB18	COM3	TB17	NC	
	TB20	09	TB19	08	
	TB22	11	TB21	10	
	TB24	24G	TB23	24V	

* XBC inputs (P00–P07) are designated as XEC inputs (I00–I07). * XBC outputs (P40–P47) are designated as XEC outputs (Q00–Q07).

XBM Slim Type

Slim

Contents

Main unit 56
Specifications 56
Part Names and Functions 60
System configuration 60
I/O wiring 61




XBE-RY16A
XBE-RY16A
XBE-TN32A
XBE-DC32A
XBE-TN32A
XBF-DV04A
XBF-AD04A
XBM-DR16S
PWR
RUN
ERR
RS-232C
RUN
STOP
RS-485
RS-232C

Performance specifications (XBM-DN32H2, XBM-DN32HP, XBM-DN32H)



(XBM-DN16H2, XBM-DP16H2, XBM-DR14H2)



Item		XBM-DN32H2, XBM-DN32HP, XBM-DP32H2, XBM-DP32HP, XBM-DN16H2,XBM-DP16H2, XBM-DR14H2	XBM-DN32H	Remarks
Operation method		Reiterative operation, fixed cycle operation, interrupt operation, constant period scan		
I/O control method		Batch processing by simultaneous scan (Refresh method), direct processing by instruction		
Programming language		Ladder Diagram (LD), Instruction List (IL),Sequential Function Chart (SFC), Structured Text (ST)	Ladder Diagram (LD), Instruction List (IL)	
Number of instructions	Basic instructions	28	28	Number of instructions
	Application instructions	677	677	
Processing speed (Basic instruction)		40 ns/step	83 ns/step	
Program memory capacity		64K steps	20K steps	
Max. I/O points		256 points	256 points	Main + 7 expansion stages
Data area	P	P0000 ~ P2047F (32,768 points)	P0000 ~ P1023F (16,384 points)	I/O relay
	M	M0000 ~ M2047F (32,768 points)	M0000 ~ M1023F (16,384 points)	Internal relay
	K	K0000 ~ K4095F (65,536 points)	K0000 ~ K4095F (65,536 points)	Keep relay
	L	L0000 ~ L4095F (65,536 points)	L0000 ~ L4095F (65,536 points)	Link relay
	F	F0000 ~ F2047F (32,768 points)	F0000 ~ F1023F (16,384 points)	Special relay
	T	100 ms, 10 ms, 1 ms: T0000 ~ T2047(Area configurable by parameter settings)	100 ms, 10 ms, 1 ms: T0000 ~ T1023(Area configurable by parameter settings)	Timer
	C	C0000 ~ C2047	C0000 ~ C1023	Counter
	S	S00.00 ~ S127.99	S00.00 ~ S127.99	Step relay
	D	D0000 ~ D32767	D0000 ~ D10239	Data register
	U	U0.0 ~ U08.31	U0.0 ~ U08.31	Analog data refresh area
	Z	Z000 ~ Z127 (128 words)	Z000 ~ Z127 (128 words)	
	N	N0000 ~ N10239 (10,240 words)	N0000 ~ N10239 (10,240 words)	
File register	R	RAM area: 8 blocks (R00000 ~ R32,767)	-	
Total number of programs		256		
Task	Initial task	1		
	Cyclic task	Max. 16		
	External contact task	Max. 8		
	Internal device task	Max. 16		
	High-speed counter task	Max. 4		
	Positioning task	1	-	
Operation mode		RUN, STOP, DEBUG		
Self-diagnosis function		Operation delay monitoring, memory error, I/O error		
Program port		USB (1 channel)		
Data retention at power failure		Latch area set in basic parameters		
Internal current consumption		540mA(XBM-DN/DP32H2(HP)), 460mA(XBM-DR14H2), 345mA(XBM-DN16H2), 345mA(XBM-DP16H2)	350mA	
Weight		134g	134g	
Current capacity		2A		

Performance specifications

XEM-DN32H2,
XEM-DN32HP,
XEM-DP32H2,
XEM-DP32HP



XEM-DN16H2,
XEM-DP16H2,
XEM-DR14H2



Item			XEM-DN32H2, XEM-DN32HP, XEM-DP32H2, XEM-DP32HP, XEM-DN16H2, XEM-DP16H2, XEM-DR14H2	Remarks
Operation method			Reiterative operation, fixed cycle operation, interrupt operation, constant period scan	
I/O control method			Batch processing by simultaneous scan (Refresh method), direct processing by instruction	
Programming language			Ladder Diagram (LD) Sequential Function Chart (SFC) Structured Text (ST)	
Number of instructions	Operators		18	
	Basic functions		136 + real number operation functions	
	Basic function blocks		43	
	Special function blocks		Special function blocks, communication function blocks (P2P)	
Processing speed (Basic instruction)			40 ns/step	
Program memory capacity			384 KB	
Max. I/O points			256 points	Main + 7 expansion stages
Data memory	Symbolic variable (A)		64 KB (Entire area retentive)	
	Input variable (I)		2 KB (%IX15.15.63)	
	Output variable (Q)		2 KB (%QX15.15.63)	
	Direct variable	M	32 KB (Entire area retentive)	
		R	32 KB × 2 blocks	
		W	64 KB	
	Flag variable	F	4 KB	
		K	8 KB	
		L	8 KB	
		U	576 bytes	
Total number of programs			256	
Task	Initial task		1	
	Cyclic task		Max. 16	
	External contact task		Max. 8	
	Internal device task		Max. 16	
	High-speed counter		Max. 4	
	Positioning task		1	
Operation mode			RUN, STOP, DEBUG	
Self-diagnosis function			Operation delay monitoring, memory error, I/O error	
Program port			USB (1 channel)	
Data retention at power failure			Retain setting in basic parameters	
Internal current consumption			540 mA (XEM-DN/DP32H2(HP)), 350 mA (XEM-DN16H2), 350 mA (XEM-DP16H2),460 mA (XEM-DR14H2)	
Weight			134g	
Current capacity			2A	

Built-in functions

(XBM-DN32H, XBM-DN32H2, XBM-DN32HP, XEM-DN32H2, XEM-DN32HP)



(XBM-DN16H2, XBM-DR14H2, XEM-DN16H2, XEM-DR14H2)



Item			XBM-DN32H2, XBM-DN32HP, XEM-DN32H2, XEM-DN32HP, XBM-DN16H2,XBM-DR14H2, XEM-DN16H2, XEM-DR14H2	XBM-DN32H
Built-in Functions	PID control		• Control by instruction, auto-tuning, PWM output, forced output • Operation scan time setting, anti-windup, ΔMV function • SV-Ramp function, forward/reverse hybrid operation, cascade operation	
	Cnet functions	Protocol	• XGT dedicated protocol; Modbus protocol • User-defined protocol; LS bus (inverter protocol)	
		Channels	Both RS-232C and RS-485 channels can be used.	
	Enet functions	Transmission specifications	• Transmission medium: 100BASE-TX; Transmission speed: 100 Mbps • Auto-MDIX support; IEEE 802.3 compliance	
		Topology	Star	
		Diagnostics	Module information, status of each service	
		Protocol	XGT dedicated, Modbus TCP, user-defined	
		Services	P2P, high-speed link, remote connection, e-mail transmission (SMTP), time synchronization (SNTP), auto scan	
	High-speed counter functions	Performance	1-phase: 200 kHz (2-phase: 100 kHz)	1-phase: 100 kHz (2-phase: 50 kHz)
		No. of channels	1-phase: 4 channels; 2-phase: 2 channels	
		Counter modes	**Four counter modes according to input pulse and up/down counting method:** • Up/down counting with 1-phase pulse input • Up/down counting with 1-phase pulse input, controlled by phase B input • Up/down pulse counting with 2-phase pulse input • Operation determined by the phase difference between rising and falling edges of 2-phase pulse inputs	
		Additional functions	• Internal/external preset; latch counter • Comparison output; revolutions per unit time	
	Positioning functions	Basic functions	• Control method: Position control, speed control, speed/position switching control, position/speed switching control • Operation pattern: End, Keep, Continuous • Operation mode: Single, Repeat	
			• Control units: pulse, mm, inch, degree • Positioning data: 400 data entries per axis (operation step Nos. 1–400)	• Control unit: pulse • Positioning data: 80 data entries per axis (operation step Nos. 1–80)
		Interpolation	2/3/4/5/6-axis linear interpolation (XBM/XEM-H2: 2-axis linear interpolation supported), 2-axis circular interpolation, 3-axis helical interpolation (not supported by XEM-H2)	2-axis linear interpolation
		Positioning	• Positioning method: Absolute / Incremental • Position address range: −2,147,483,648 to 2,147,483,647	
			• Speed: Max. 200 kpps (setting range: 1–200,000 pps) • Acceleration/deceleration: Trapezoidal and S-curve profiles	• Speed: Max. 100 kpps (setting range: 1–100,000 pps) • Acceleration/deceleration: Trapezoidal profile
		Homing	• DOG (OFF) and home signal • DOG (ON) and home signal • DOG signal • Upper/lower limit and home signal • High-speed homing • Upper/lower limit • Home signal	• DOG (OFF) and home signal • DOG (ON) and home signal • DOG signal
		JOG operation	JOG operation, MPG operation, inching operation	JOG operation
	Pulse catch / External contact interrupt		• 10 µs: 4 points (XBM: P0000–P0003; XEM: %IX0.0.0–%IX0.0.3) • 50 µs: 4 points (XBM: P0004–P0007; XEM: %IX0.0.4–%IX0.0.7)	• 10 µs: 4 points (P0000–P0003) • 50 µs: 4 points (P0004–P0007)
	Input filter		Selectable from 1, 3, 5, 10, 20, 70, and 100 ms	

* Auto-MDIX (Automatic medium-dependent interface crossover):
Automatically detects whether the cable connected to the Ethernet port is a straight-through or crossover cable.

Performance specifications (XBM "Slim" type)



Item		XBM-DR16S	XBM-DN16S	XBM-DN32S
Operation method		Cyclic operation, periodic operation, interrupt operation, fixed-cycle scan		
I/O control method		Batch processing by simultaneous scan (Refresh method), directed by program instruction		
Programming language		Ladder Diagram / Instruction List		
Number of instructions	Basic	28		
	Application	677		
Processing speed (Basic instruction)		160 ns/step		
Program memory capacity		10 ksteps		
Max. I/O points		240 points		256 points
Data area	P	P0000–P127F (2,048 points)		
	M	M0000–M255F (4,096 points)		
	K	K00000–K2559F (Special area Note 1) : K2600–2559F) (40,960 points)		
	L	L00000–L1279F (20,480 points)		
	F	F0000–F255F (4,096 points)		
	T	100 ms, 10 ms, 1 ms: T000–T255 (Area can be changed by parameter settings)		
	C	C000–C255		
	S	S00.00–S127.99		
	D	D0000–D5119 (5,120 words)		
	U	U00.00–U07.31 (Analog data refresh area: 256 words)		
	Z	Z000–Z127 (128 words)		
	N	N00000–N3935 (3,936 words)		
Total number of programs		128		
Initial task		1 (_INIT)		
Cyclic task		8		
External contact task		8		
Internal device task		8		
Operation mode		RUN, STOP, DEBUG		
Self-diagnostics		Watchdog timer, memory error, I/O error		
Programming port		RS-232C (1 channel)		
Data retention during power failure		Latch area set in the basic parameters		
Built-in functions		RS-232C/485 communication, high-speed counter, PID, pulse catch, input filter		
		External contact interrupt, positioning Note 2)		
Internal current consumption		400 mA	250 mA	280 mA
Weight		140 g	100 g	110 g
Current capacity Note 3)		1.5 A		

Note 1) The special area refers to the areas associated with the built-in high-speed counter, positioning, and PID functions.
Note 2) XBM-DR16S does not support positioning.
Note 3) Current capacity is the maximum output current of the built-in XBM power supply board (5 V DC).
When configuring a system with expansion modules, the combined internal current consumption of the XBM and expansion modules must not exceed this capacity.

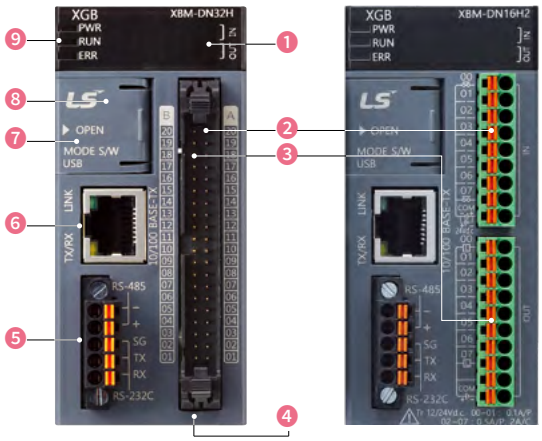

Part Names and Functions (XBM)

No.	Name	Description
❶	I/O indication LEDs	Indicate the ON/OFF status of I/O points.
❷	Input connector	Terminal block for input signals.
❸	Output connector	Terminal block for output signals.
❹	Power terminal block	Terminal block for the power supply (24 VDC).
❺	Built-in communication connector	Connector for built-in RS-232C/485 communication.
❻	Built-in communication connector	Connector for built-in Ethernet communication.
❼	PADT connection connector	Connector for connection to XG5000 (USB, 1 channel).
❽	RUN/STOP mode switch	**Sets the operating mode of the main unit.** • STOP → RUN: Starts program execution. • RUN → STOP: Stops program execution. (Remote operation is available when the switch is set to STOP.)
❾	Status indication LEDs	**Indicate the operating status of the main unit.** • PWR (red, ON): Indicates that power is supplied. • RUN (green, ON): Indicates operation in RUN mode. • ERR (red, flashing): Indicates an error during PLC operation.

XBM System configuration

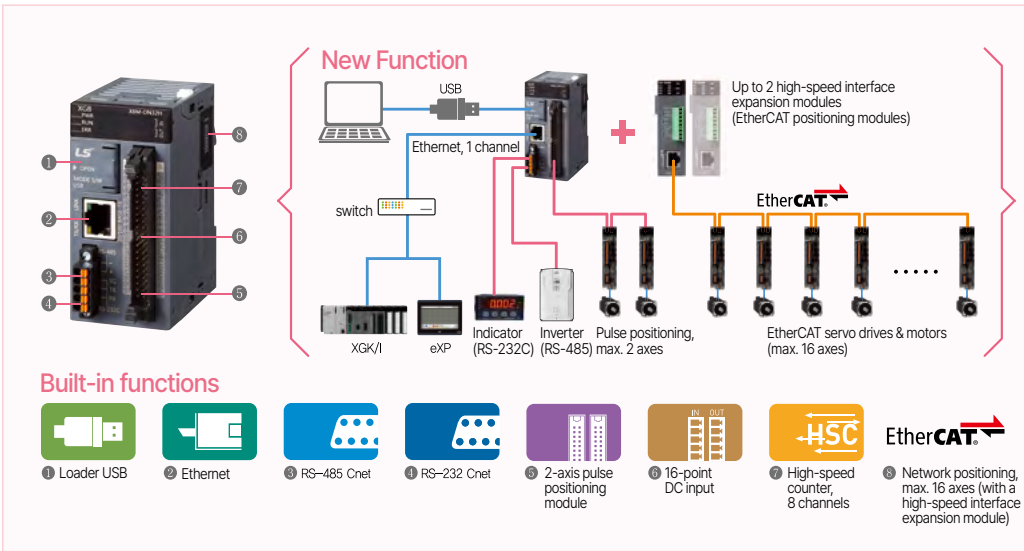

XBM-DN16H2, XBM-DP16H2, XBM-DR14H2 8 points Input (Source/Sink type)

Circuit configuration	NO.	Contact	Terminal layout
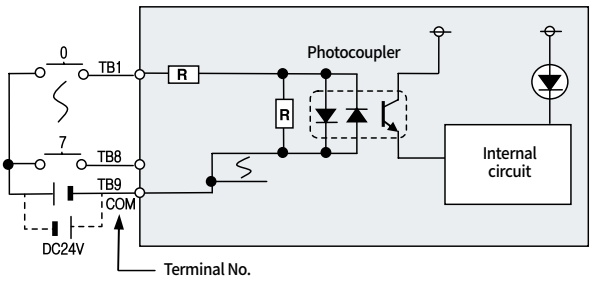	TB1	00	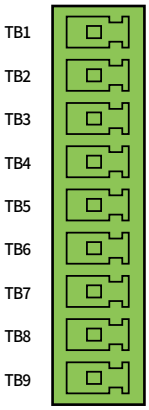
	TB2	01	
	TB3	02	
	TB4	03	
	TB5	04	
	TB6	05	
	TB7	06	
	TB8	07	
	TB9	IN_COM	

XBM-DR14H2 Output

Circuit configuration	NO.	Contact	Terminal layout
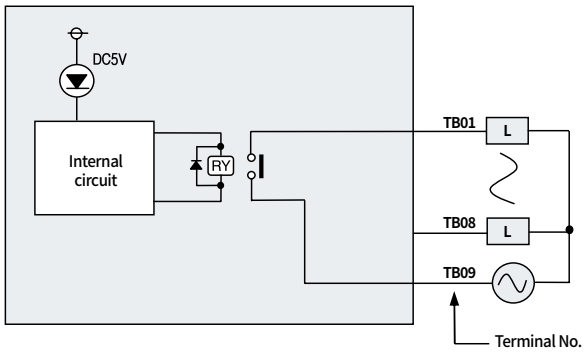	TB01	20	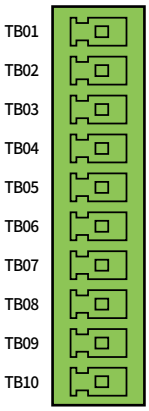
	TB02	21	
	TB03	22	
	TB04	23	
	TB05	24	
	TB06	25	
	TB07	OUT_COM	
	TB08	N.C.	
	TB09	N.C.	
	TB10	N.C.	

XBM-DN16H2 Output (Sink type)

Circuit configuration	NO.	Contact	Terminal layout
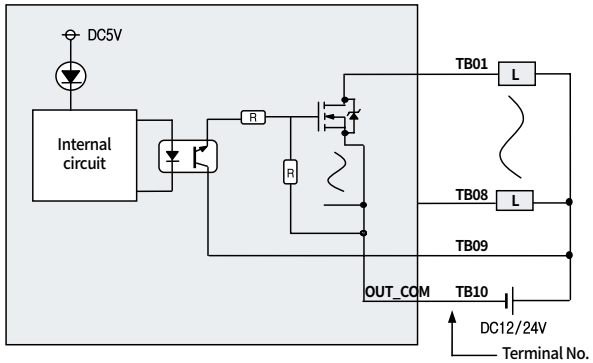	TB01	20	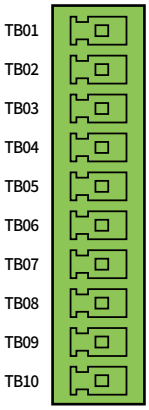
	TB02	21	
	TB03	22	
	TB04	23	
	TB05	24	
	TB06	25	
	TB07	26	
	TB08	27	
	TB09	P	
	TB10	OUT_COM	

XBM-DN32H Input (Source/Sink type)

Circuit configuration

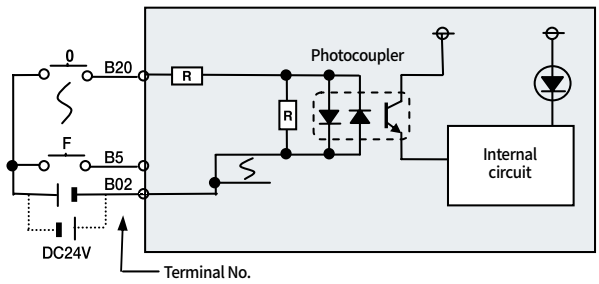

NO.	Contact	NO.	Contact
B20	00	A20	20
B19	01	A19	21
B18	02	A18	22
B17	03	A17	23
B16	04	A16	24
B15	05	A15	25
B14	06	A14	26
B13	07	A13	27
B12	08	A12	28
B11	09	A11	29
B10	0A	A10	2A
B09	0B	A9	2B
B08	0C	A8	2C
B07	0D	A7	2D
B06	0E	A6	2E
B05	0F	A5	2F
B04	NC	A4	P
B03	NC	A3	P
B02	IN_ COM	A2	OUT_ COM
B01	IN_ COM	A1	OUT_ COM

Terminal layout

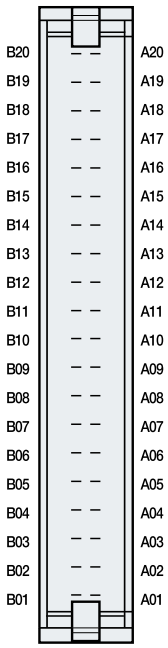

XBM-DN32H Output (Sink type)

Circuit configuration

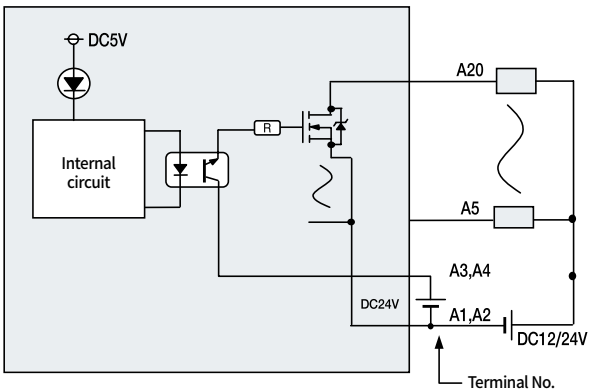

NO.	Contact	NO.	Contact
B20	00	A20	20
B19	01	A19	21
B18	02	A18	22
B17	03	A17	23
B16	04	A16	24
B15	05	A15	25
B14	06	A14	26
B13	07	A13	27
B12	08	A12	28
B11	09	A11	29
B10	0A	A10	2A
B09	0B	A9	2B
B08	0C	A8	2C
B07	0D	A7	2D
B06	0E	A6	2E
B05	0F	A5	2F
B04	NC	A4	P
B03	NC	A3	P
B02	IN_ COM	A2	OUT_ COM
B01	IN_ COM	A1	OUT_ COM

Terminal layout

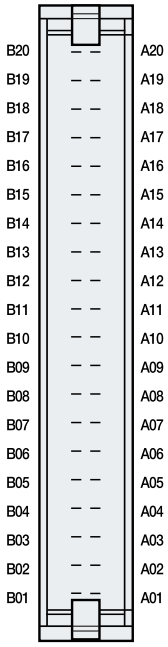

XBM-DR16S Input (Source/Sink type)

Circuit configuration	NO.	Contact	Terminal layout
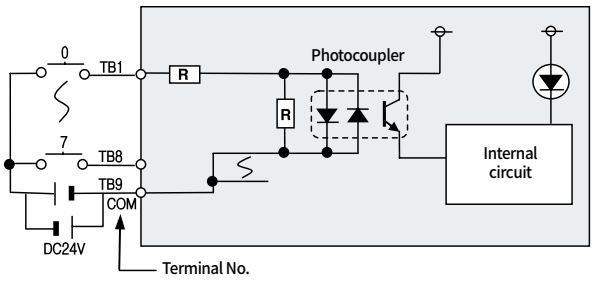	TB1	0	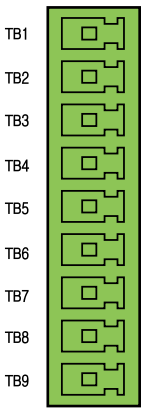
	TB2	1	
	TB3	2	
	TB4	3	
	TB5	4	
	TB6	5	
	TB7	6	
	TB8	7	
	TB9	COM	

XBM-DR16S Relay output

Circuit configuration	NO.	Contact	Terminal layout
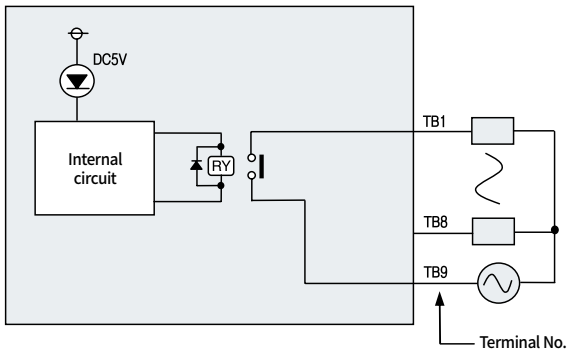	TB1	20	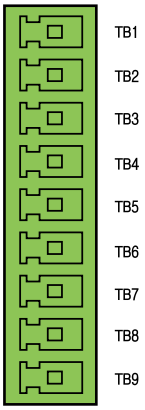
	TB2	21	
	TB3	22	
	TB4	23	
	TB5	24	
	TB6	25	
	TB7	26	
	TB8	27	
	TB9	COM	

XBM-DN16S Input (Source/Sink type)

Circuit configuration	NO.	Contact	NO.	Contact	Terminal layout
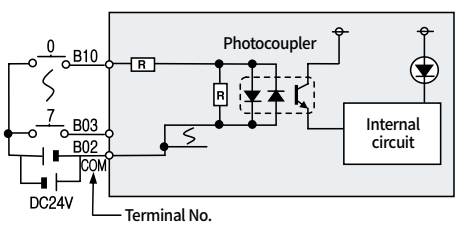	B10	0	A10	NC	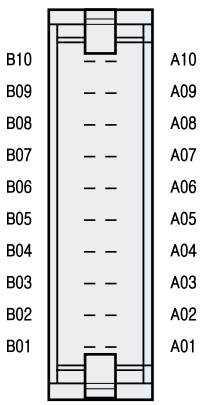
	B09	1	A09	NC	
	B08	2	A08	NC	
	B07	3	A07	NC	
	B06	4	A06	NC	
	B05	5	A05	NC	
	B04	6	A04	NC	
	B03	7	A03	NC	
	B02	COM	A02	NC	
	B01	COM	A01	NC	

XBM-DN16S Transistor output (Sink type)

Circuit configuration

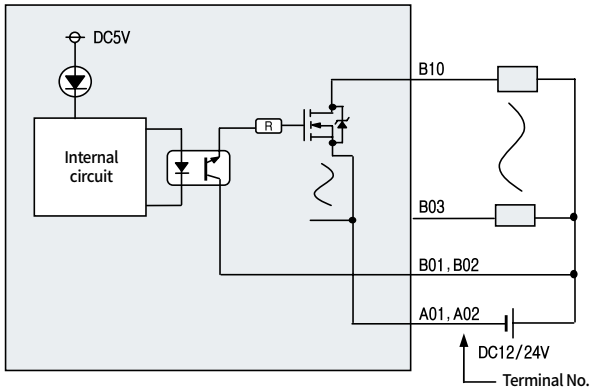

NO.	Contact
B10	20
B09	21
B08	22
B07	23
B06	24
B05	25
B04	26
B03	27
B02	DC12 /24V
B01	
A10	NC
A09	NC
A08	NC
A07	NC
A06	NC
A05	NC
A04	NC
A03	NC
A02	COM
A01	

Terminal layout

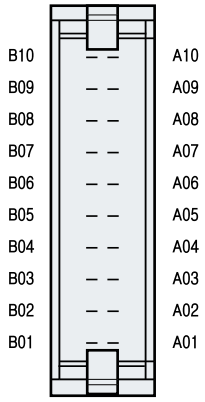

XBM-DN32S Input (Source/Sink type)

Circuit configuration

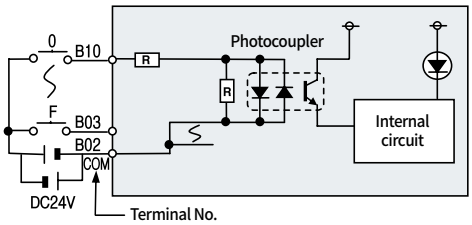

NO.	Contact	NO.	Contact
B10	0	A10	8
B09	1	A09	9
B08	2	A08	A
B07	3	A07	B
B06	4	A06	C
B05	5	A05	D
B04	6	A04	E
B03	7	A03	F
B02	COM	A02	COM
B01	COM	A01	COM

Terminal layout

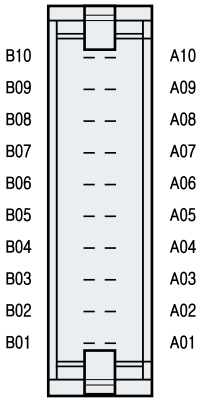

XBM-DN32S Transistor output (Sink type)

Circuit configuration

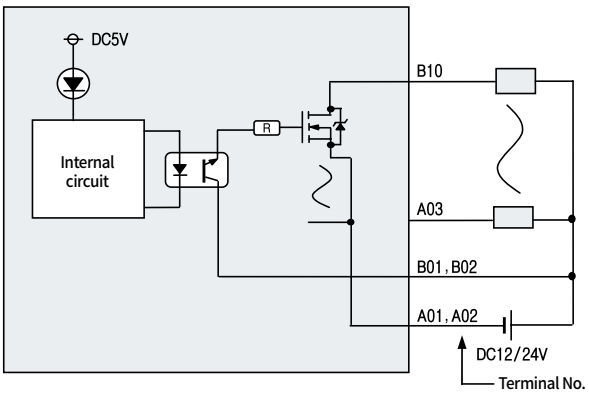

NO.	Contact
B10	20
B09	21
B08	22
B07	23
B06	24
B05	25
B04	26
B03	27
B02	DC12 /24V
B01	
A10	28
A09	29
A08	2A
A07	2B
A06	2C
A05	2D
A04	2E
A03	2F
A02	COM
A01	

Terminal layout

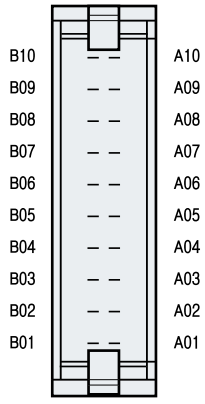

Application

XGB Series

Contents

Input/Output Specifications 68
System Configuration 74
Expansion I/O 75
Built-in Functions 79
High-speed Counter 79
Positioning 82
PID Control 86
Special Modules 88
Analog Input 88
Analog Output 91
Analog Input/Output 93
RTD Input 94
Thermocouple Input 95
Temperature Controller Module 96
Load Cell Input Module 98
Positioning Module 99
Built-in Positioning 100
EtherCAT Positioning Module 103
High-speed Counter Module 105
Option Modules 107
RTC Option Module 107
Digital Input Module 108
Transistor Output Option Module 109
Analog Input 111
Analog Output 112
Analog Combination Module 113
RTD Input 115
TC Input 116
Expansion Communication Modules 117
Cnet 117
Fast Ethernet 118
RAPIEnet 119
EtherNet/IP 120
Profibus-DP 121
Rnet 122
DeviceNet 124
CANopen 125
Programming Software 126
XG5000 128
XGT Panel iXP Series 129
XGT Panel eXP2 Series 130
XGT Panel XP 10 131
Product List 132
Dimensions 134
Smart Link 134







Input/Output Specifications

Input Specifications (XBC/XEC "U Type")

Item / Specification		DC Input Specifications
		XBC/XEC-DN32U, XBC/XEC-DN32UP, XBC/XEC-DN32UA, XBC/XEC-DP32U, XBC/XEC-DP32UP, XBC/XEC-DP32UA, XBC/XEC-DR28U, XBC/XEC-DR28UP, XBC/XEC-DR28UA
Input point		16 points
Insulation method		Photo coupler isolation
Rated input voltage		DC 24 V
Rated input current		About 4 mA (contact points 0–7: about 5 mA)
Operation voltage range		DC 20.4–28.8 V (ripple rate: within 5%)
On voltage / On current		DC 19 V or higher / 3 mA or higher
Off voltage / Off current		DC 6 V or lower / 1 mA or lower
Input resistance		About 5.6 kΩ (contact points 0–7: about 4.7 kΩ)
Response time	Off→On	1/3/5/10/20/70/100 ms (Set by I/O parameter) Default: 3 ms
	On→Off	
Dielectric withstand voltage		AC 560 Vrms / 3 cycles (altitude: 2,000 m)
Insulation resistance		10 MΩ or more, measured with a megohmmeter
Common method		16 points/COM
Proper wire size		Stranded wire 0.3–0.75 mm² (external diameter: 2.8 mm or less)
Operation indicator		LED On when Input On
External connection method		8-pin terminal block connector + 10-pin terminal block connector

Tr Output Specifications (XBC/XEC "U Type")

Item / Specification		Main unit		
		XBC/XEC-DN32U	XBC/XEC-DN32UA	XBC/XEC-DN32UP
Output point		16 points		
Insulation method		Photo coupler isolation		
Rated load voltage		DC 12/24 V		
Operation load voltage range		DC 10.2–26.4 V		
Max. load current		0.5 A/point, 2 A/COM		
Off leakage current		0.1 mA or less		
Max. inrush current		4 A / 10 ms or less		
Max. voltage drop when On		DC 0.4 V or less		
Surge absorber		Zener diode		
Response time	Off→On	1 ms or less		
	On→Off	1 ms or less (rated load, resistive load)		
Common method		16 points/COM		
Proper wire size		Stranded wire 0.3–0.75 mm² (external diameter: 2.8 mm or less)		
External power supply	Voltage	DC 12/24 V, 10% (ripple voltage: 4 Vp-p or less)		
	Current	10 mA or less (when connecting DC 24 V)		
Operation indicator		LED On when Output On		
External connection method		8-pin terminal block connector + 10-pin terminal block connector		

Relay Output Specifications (XBC/XEC "U Type")

Item / Specification		Main unit		
		XBC/XEC-DR28U	XBC/XEC-DR28UA	XBC/XEC-DR28UP
Output point		12 points		
Insulation method		Relay isolation		
Rated load voltage/current		DC 24 V 2 A (resistive load) / AC 220 V 2 A (cos ϕ = 1),		
Min. load voltage/current		2 A/COM (P20–23), 5 A/COM (P24–2B)		
Max. load voltage		DC 5 V / 1 mA		
Off leakage current		AC 250 V, DC 125 V		
Max. On/Off frequency		0.1 mA (AC 220 V, 60 Hz)		
Surge absorber		3,600 operations/hour		
Service life	Mechanical	None		
	Electrical	100,000 operations or more at rated load voltage/current		
		AC 200 V / 1.5 A, AC 240 V / 1 A (cos ϕ = 0.7): 100,000 operations or more		
		AC 200 V / 1 A, AC 240 V / 0.5 A (cos ϕ = 0.35): 100,000 operations or more		
		DC 24 V / 1 A, DC 100 V / 0.1 A (L/R = 7 ms): 100,000 operations or more		
Response time	Off→On	10 ms or less		
	On→Off	12 ms or less		
Common method		1 point/COM (P20–23), 4 points/COM (P24–2B)		
Proper wire size		Stranded wire 0.3–0.75 mm² (external diameter: 2.8 mm or less)		
Operation indicator		LED On when Output On		
External connection method		8-pin terminal block connector + 10-pin terminal block connector		

Input Specifications (XBC/XEC "H Type")

Item		DC Input Specifications	
		XBC-DR(N)32H / XEC-DR(N)32H	XBC-DR(N)64H / XEC-DR(N)64H
Input point		16 points	32 points
Insulation method		Photo coupler isolation	
Rated input voltage/current		Contact points 0–7: about 10 mA	
Operation voltage range		DC 20.4–28.8 V (ripple rate: within 5%)	
On voltage / On current		DC 19 V or higher / 3 mA or higher	
Off voltage / Off current		DC 6 V or lower / 1 mA or lower	
Input resistance		Contact points 0–7: about 2.7 kΩ	
Response time	Off→On	1/3/5/10/20/70/100 ms (Set by main unit parameter) Default: 3 ms	
	On→Off		
Dielectric withstand voltage		AC 560 Vrms / 3 cycles (altitude: 2,000 m)	
Insulation resistance		10 MΩ or more, measured with a megohmmeter	
Common method		16 points/COM	
Proper wire size		Stranded wire 0.3–0.75 mm² (external diameter: 2.8 mm or less)	
Operation indicator		LED On when Input On	
Internal current consumption (mA)		-	
External connection method		24-point terminal block	42-point terminal block
Rated current		About 4 mA (contact points 0–7: about 10 mA)	
Input resistance		About 5.6 kΩ (contact points 0–7: about 2.7 kΩ)	

Tr Output Specifications (XBC/XEC "H Type")

Item		Transistor Output Specifications	
		XBC-DN32H / XEC-DN(P)32H	XBC-DN64H / XEC-DN(P)64H
Output point		16 points	32 points
Insulation method		Photo coupler isolation	
Rated load voltage		DC 12/24 V	
Operation load voltage range		DC 10.2–26.4 V	
Max. load current		0.5 A/point *Note 1), 2A/COM	
Off leakage current		0.1 mA or less	
Max. voltage drop when On		DC 0.4 V	
Surge absorber		Zener diode	
Response time	Off→On	1 ms or less	
	On→Off	1 ms or less (rated load, resistive load)	
Output type		DN00H: Sink output, DP00H: Source output	
Common method		4 points/COM	4 (8) points/COM *Note 2)
Proper wire size		Stranded wire 0.3–0.75 mm² (external diameter: 2.8 mm or less) *Note 3)	
Internal current consumption (mA)		400	410
External current consumption *Note 4)		25	
Operation indicator		LED On when Output On	
External connection method		24-point terminal block	42-point terminal block

*Note 1) Positioning output: 0.1 A/point. *Note 2) 4 points/COM (COM0–COM3), 8 points/COM (COM4–COM5).
*Note 3) For connector-type products XBM-DN16/32S, XBE-DC32A and XBE-TN(P)32A, use 0.3 mm² wire. For other terminal block-type products, use stranded wire 0.3–.075 mm² (external diameter: 2.8 mm or less).
*Note 4) Current drawn from the external DC 24 V power supply.

Relay Output Specifications (XBC/XEC "H type")

Item		Relay Output Specifications	
		XBC-DR32H / XEC-DR32H	XBC-DR64H / XEC-DR64H
Output point		16 points	32 points
Insulation method		Relay isolation	
Rated load voltage/current		DC 24 V 2 A (resistive load) / AC 220 V 2 A (cos ϕ = 1), 5 A/COM	
Min. load voltage/current		DC 5 V / 1 mA	
Max. load voltage/current		AC 250 V, DC 125 V	
Off leakage current		0.1 mA (AC 220 V, 60 Hz)	
Max. On/Off frequency		3,600 operations/hour	
Surge absorber		None	
Service life	Mechanical	20 million operations or more	
	Electrical	100,000 operations or more at rated load voltage/current	
		AC 200 V / 1.5 A, AC 240 V / 1 A (cos ϕ = 0.7): 100,000 operations or more	
		AC 200 V / 1 A, AC 240 V / 0.5 A (cos ϕ = 0.35): 100,000 operations or more	
		DC 24 V / 1 A, DC 100 V / 0.1 A (L/R = 7 ms): 100,000 operations or more	
Response time	Off→On	10 ms or less	
	On→Off	12 ms or less	
Common method		4 points/COM	4 (8) points/COM *Note 1)
Proper wire size		4 (8) points/COM [1]	
Internal current consumption (mA)		360	720
Operation indicator		LED On when Output On	
External connection method		24-point terminal block	42-point terminal block

*Note 1) XBC-DR64H: 4 points/COM (COM0–COM3), 8 points/COM (COM4–COM5).

Input/Output Specifications

Input Specifications (XBC/XEC "SU Type")

Specification \ Model		DC Input Specifications			
		XBC/XEC-DR20SU XBC/XEC-DN20SU XBC/XEC-DP20SU	XBC/XEC-DR30SU XBC/XEC-DN30SU XBC/XEC-DP30SU	XBC/XEC-DR40SU XBC/XEC-DN40SU XBC/XEC-DP40SU	XBC/XEC-DR60SU XBC/XEC-DN60SU XBC/XEC-DP60SU
Input point		12 points	18 points	24 points	36 points
Insulation method		Photo coupler insulation			
Rated input voltage		DC24V			
Rated input current		About 4 mA (points 0–1: about 16 mA; points 2–7: about 10 mA); DN20SU (DN30SU): about 4 mA (points 0–7: about 10 mA)			
Operation voltage range		DC 20.4–28.8 V (ripple rate: within 5%)			
ON voltage / ON current		DC 19 V or higher / 3 mA or higher			
OFF voltage / OFF current		DC 6 V or lower / 1 mA or lower			
Input resistance		5.6 kΩ (P00–P01: about 1.5 kΩ; P02–P07: about 2.7 kΩ); DN20SU (DN30SU): about 5.6 kΩ (P00–P07: about 2.7 kΩ)			
Response time	Off→On	1/3/5/10/20/70/100 ms (set by I/O parameter); default: 3 ms			
	On→Off				
Insulation withstand voltage		AC 560 Vrms / 3 cycles (altitude: 2,000 m)			
Insulation resistance		10 MΩ or more by megohmmeter			
Common method (/COM)		12 points	18 points	24 points	36 points
Proper wire size		0.3 mm²			
Operation indicator		LED ON when input is ON			
External connection method (M3 × 6 screws)		24-point terminal block		30-point terminal block	42-point terminal block

Tr Output Specifications (XBC/XEC "SU Type")

Specification \ Model		Transistor Output Specifications			
		XBC/XEC-DN20SU XBC/XEC-DP20SU	XBC/XEC-DN30SU XBC/XEC-DP30SU	XBC/XEC-DN40SU XBC/XEC-DP40SU	XBC/XEC-DN60SU XBC/XEC-DP60SU
Output point		8 points	12 points	16 points	24 points
Insulation method		Photo coupler insulation			
Rated load voltage		DC 12/24 V			
Operation load voltage range		DC 10.2–26.4 V			
Max. load current		0.5 A/point, 2 A/COM			
OFF leakage current		0.1 mA or less			
Max. inrush current		4 A / 10 ms or less			
Max. voltage drop when ON		DC 0.4 V or less			
Surge absorber		Zener diode			
Response time	Off→On	0.1 mA or less			
	On→Off	1 ms or less (rated load, resistive load)			
Output type		DN00SU: Sink output; DP00SU: Source output			
Common method (/COM)		4 points	4 points	4 points	4 points
Proper wire size					
External power supply	Voltage	DC 12/24 V ±10% (ripple voltage: 4 Vp-p or less)			
	Current	25 mA or less (when connecting DC 24 V)			
Operation indicator		LED ON when output is ON			
External connection method (M3 × 6 screws)				30-point terminal block	42-point terminal block

Relay Output Specifications (XBC/XEC "SU Type")

Specification \ Model		Relay Output Specifications			
		XBC/XEC-DR20SU	XBC/XEC-DR30SU	XBC/XEC-DR40SU	XBC/XEC-DR60SU
Output point		8 points	12 points	16 points	24 points
Insulation method		Relay insulation			
Rated load voltage/current		DC 24 V 2 A (resistive load) / AC 220 V 2 A (cos ϕ = 1), 5 A/COM			
Min. load voltage/current		DC 5 V / 1 mA			
Max. load voltage		AC 250 V, DC 125 V			
OFF leakage current		0.1 mA (AC 220 V, 60 Hz)			
Max. ON/OFF frequency		3,600 times/hour			
Surge absorber		None			
Service life	Mechanical	20 million times or more			
	Electrical	100,000 times or more at rated load voltage/current			
		AC 200 V / 1.5 A, AC 240 V / 1 A (cos ϕ = 0.7): 100,000 times or more			
		AC 200 V / 1 A, AC 240 V / 0.5 A (cos ϕ = 0.35): 100,000 times or more			
		DC 24 V / 1 A, DC 100 V / 0.1 A (L/R = 7 ms): 100,000 times or more			
Response time	Off→On	10 ms or less			
	On→Off	12 ms or less			
Common method (/COM)		4 points/COM (P40, P41: 1 point/COM; P42, P43: 2 points/COM)			
Proper wire size		Stranded wire 0.3–0.75 mm² (external diameter: 2.8 mm or less)			
Operation indicator		LED ON when output is ON			
External connection method (M3 × 6 screws)		24-point terminal block		30-point terminal block	42-point terminal block

Input Specifications (XBC/XEC "E Type")

Specification \ Model		DC Input Specifications			
		XBC/XEC-DR10E XBC/XEC-DN10E XBC/XEC-DP10E	XBC/XEC-DR14E XBC/XEC-DN14E XBC/XEC-DP14E	XBC/XEC-DR20E XBC/XEC-DN20E XBC/XEC-DP20E	XBC/XEC-DR30E XBC/XEC-DN30E XBC/XEC-DP30E
Input point		6 points	8 points	12 points	18 points
Insulation method		Photo coupler insulation			
Rated input voltage		DC 24 V			
Rated input current		About 4 mA (points 0–3: about 7 mA)			
Operation voltage range		DC 20.4–28.8 V (ripple rate: within 5%)			
ON voltage / ON current		DC 19 V or higher / 3 mA or higher			
OFF voltage / OFF current		DC 6 V or lower / 1 mA or lower			
Input resistance		About 5.6 kΩ (%IX0.0.0–%IX0.0.3: about 2.7 kΩ)			
Response time	Off→On	1/3/5/10/20/70/100 ms (set by I/O parameter); default: 3 ms			
	On→Off				
Insulation withstand voltage		AC 560 Vrms / 3 cycles (altitude: 2,000 m)			
Insulation resistance		10 MΩ or more by megohmmeter			
Common method (/COM)		6 points	8 points	12 points	18 points
Proper wire size		0.3 mm²			
Operation indicator		LED ON when input is ON			
External connection method (M3 × 6 screws)		14-point terminal block		24-point terminal block	

Tr Output Specifications (XBC/XEC "E Type")

Specification \ Model		Transistor Output Specifications			
		XBC/XEC-DN10E XBC/XEC-DP10E	XBC/XEC-DN14E XBC/XEC-DP14E	XBC/XEC-DN20E XBC/XEC-DP20E	XBC/XEC-DN30E XBC/XEC-DP30E
Output point		4 points	6 points	8 points	12 points
Insulation method		Photo coupler insulation			
Rated load voltage		DC 12/24 V			
Operation load voltage range		DC 10.2–26.4 V			
Max. load current		0.5 A/point, 2 A/COM			
OFF leakage current		0.1 mA or less			
Max. inrush current		4 A / 10 ms or less			
Max. voltage drop when ON		DC 0.4 V or less			
Surge absorber		Zener diode			
Response time	Off→On	1 ms or less			
	On→Off	1 ms or less (rated load, resistive load)			
Output type		DN00E: Sink output; DP00E: Source output			
Common method (/COM)		4 points/COM			
Proper wire size		Stranded wire 0.3–0.75 mm² (external diameter: 2.8 mm or less)			
External power supply	Voltage	DC 12/24 V ±10% (ripple voltage: 4 Vp-p or less)			
	Current	25 mA or less (when connecting DC 24 V)			
Operation indicator		LED ON when output is ON			
External connection method (M3 × 6 screws)		14-point terminal block		24-point terminal block	

Relay Output Specifications (XBC/XEC "E Type")

Specification \ Model		Relay Output Specifications			
		XBC/XEC-DR10E	XBC/XEC-DR14E	XBC/XEC-DR20E	XBC/XEC-DR30E
Output point		4 points	6 points	8 points	12 points
Insulation method		Relay insulation			
Rated load voltage/current		DC 24 V 2 A (resistive load) / AC 220 V 2 A (cos ϕ = 1), 5 A/COM			
Min. load voltage/current		DC 5 V / 1 mA			
Max. load voltage		AC 250 V, DC 125 V			
OFF leakage current		0.1 mA (AC 220 V, 60 Hz)			
Max. ON/OFF frequency		3,600 times/hour			
Surge absorber		None			
Service life	Mechanical	20 million times or more			
	Electrical	100,000 times or more at rated load voltage/current			
		AC 200 V / 1.5 A, AC 240 V / 1 A (cos ϕ = 0.7): 100,000 times or more			
		AC 200 V / 1 A, AC 240 V / 0.5 A (cos ϕ = 0.35): 100,000 times or more			
		DC 24 V / 1 A, DC 100 V / 0.1 A (L/R = 7 ms): 100,000 times or more			
Response time	Off→On	10 ms or less			
	On→Off	12 ms or less			
Common method (/COM)		2 points	4 points		
Proper wire size		Stranded wire 0.3–0.75 mm² (external diameter: 2.8 mm or less)			
Operation indicator		LED ON when output is ON			
External connection method (M3 × 6 screws)		14-point terminal block		24-point terminal block	

Input/Output Specifications

Input Specifications

Item		DC Input Specifications				
		XBE-DC08A XBE-DR16A	XBE-DC16A	XBE-DC32A	XBE-DC16B	XBE-DN32A
Input point		8 points	16 points	32 points	16 points	16 points
Insulation method		Photo coupler insulation				
Rated input voltage/current		DC 24 V / 4 mA			DC12/24V / 4/8mA	DC24V / 4mA
Operation voltage range		DC 20.4–28.8 V (ripple rate: 5% or less)			DC 9.5–30 V (ripple rate: 5% or less)	DC 20.4–28.8 V (ripple rate: 5% or less)
On voltage / On current		DC 19 V or higher / 3 mA or higher			DC 9 V or higher / 3 mA or higher	DC 19 V or higher / 3 mA or higher
Off voltage / Off current		DC 6 V or lower / 1 mA or lower			DC 5 V or lower / 1 mA or lower	DC 6 V or lower / 1 mA or lower
Input resistance		About 5.6 kΩ			About 2.7 kΩ	About 5.6 kΩ
Response time	Off→On On→Off	1/3/5/10/20/70/100 ms (set by main unit parameter); default: 3 ms				
Dielectric withstand voltage		AC 560 Vrms / 3 cycles (altitude: 2,000 m)				
Insulation resistance		10 MΩ or more by insulation resistance tester				
Common method		8 points/COM	16 points/COM	32 points/COM	16 points/COM	16 points/COM
Proper wire size		Stranded wire 0.3–0.75 mm² (external diameter: 2.8 mm or less)				
Operation indicator		LED On when Input On				
Internal current consumption (mA)		40/240	40	50	40	60 (all I/O points On)
External connection method		9-point terminal block	8-point/10-point terminal block	40-pin connector	8-point/10-point terminal block	40-pin connector

Tr Output Specifications

Item		Transistor Output Specifications						
		XBE-TN08A	XBE-TN16A	XBE-TN32A	XBE-TP08A	XBE-TP16A	XBE-TP32A	XBE-DN32A
Output point		8 points	16 points	32 points	8 points	16 points	32 points	16 points
Insulation method		Photo coupler insulation						
Rated load voltage		DC 12/24 V						
Operation load voltage range		DC 10.2–26.4 V						
Max. load current		0.5 A/point*Note 1), 2 A/COM		0.2 A/point, 2 A/COM	0.5 A/point*Note 1), 2 A/COM		0.2 A/point, 2 A/COM	0.2 A/point, 2 A/COM
Off leakage current		0.1 mA or less						
Max. voltage drop when On		DC 0.4V						
Surge absorber		Zener diode						TVS diode
Response time	Off→On	1 ms or less						
	On→Off	1 ms or less (rated load, resistive load)						
Current output type		Sink output			Source output			Sink output
Common method		8 points/COM	16 points/COM	32 points/COM	8 points/COM	16 points/COM	32 points/COM	16 points/COM
Proper wire size		Stranded wire 0.3–0.75 mm² (external diameter: 2.8 mm or less) *Note 2)						0.3㎟
Internal current consumption (mA)		40	50	70	40	50	70	60 (all I/O points On)
External current consumption (mA)*Note 3)		10		20	10		20	20 mA (when connecting DC 24 V)
Operation indicator		LED On when Output On						
External connection method		10-point terminal block	8-point/10-point terminal block	40-pin connector	10-point terminal block	18-point terminal block	40-pin connector	40-pin connector

*Note 1) The positioning output is 0.1 A/point.
*Note 2) For connector-type products, use 0.3 mm² wire for XBM-DN16/32S, XBE-DC32A, and XBE-TN(P)32A.
For other terminal-block type products, use 0.3–0.75 mm² stranded wire with an outer diameter of 2.8 mm or less.
*Note 3) This is the current consumption from the externally supplied DC 24 V power source.

Relay Output Specifications

Item		Relay Output Specifications		
		XBE-RY08A XBE-RY08B (independent COM)	XBE-RY16A	XBE-DR16A
Output point		8 points	16 points	8 points
Insulation method		Relay insulation		
Rated load voltage/current		DC 24 V 2 A (resistive load) / AC 220 V 2 A (cos ϕ = 1), 5 A/COM		
Min. load voltage/current		DC 5 V / 1 mA		
Max. load voltage		AC 250 V, DC 125 V		
Off leakage current		0.1 mA (AC 220 V, 60 Hz)		
Max. On/Off frequency		3,600 operations/hour		
Surge absorber		None		
Service life	Mechanical	20 million operations or more		
	Electrical	100,000 operations or more at rated load voltage/current		
		AC 200 V / 1.5 A, AC 240 V / 1 A (cos ϕ = 0.7): 100,000 operations or more		
		AC 200 V / 1 A, AC 240 V / 0.5 A (cos ϕ = 0.35): 100,000 operations or more		
		DC 24 V / 1 A, DC 100 V / 0.1 A (L/R = 7 ms): 100,000 operations or more		
Response time	Off→On	10 ms or less		
	On→Off	12 ms or less		
Common method		8 points/COM, 1 point/COM	8 points/COM	8 points/COM
Proper wire size		Stranded wire 0.3–0.75 mm² (external diameter: 2.8 mm or less)		
Internal current consumption (mA)		230	440	280
Operation indicator		LED On when Output On		
External connection method		9-point terminal block, 9-point terminal block × 2	9-point terminal block × 2	9-point terminal block

Input Specifications (XBM "H, Slim" Type)

Item		DC Input Specifications			
		XBM-DN32H(H2,H)	XBM-DR16S	XBM-DN16S	XBM-DN32S
Input point		16 points	8 points	8 points	16 points
Insulation method		Photo coupler insulation			
Rated input voltage/current		DC 24 V / 4 mA (points 00–03: 7 mA)			
Operation voltage range		DC 20.4–28.8 V (ripple rate: 5% or less)			
On voltage / On current		DC 19 V or higher / 3 mA or higher			
Off voltage / Off current		DC 6 V or lower / 1 mA or lower			
Input resistance					
Response time	Off→On	1/3/5/10/20/70/100 ms (set by main unit parameter); default: 3 ms			
	On→Off				
Dielectric withstand voltage		AC 850 Vrms / 3 cycles (altitude: 2,000 m)	AC 560 Vrms / 3 cycles (altitude: 2,000 m)		
Insulation resistance		10 MΩ or more by insulation resistance tester			
Common method		16 points/COM	8 points/COM		16 points/COM
Proper wire size		0.3 mm²	Stranded wire 0.3–0.75 mm² (external diameter: 2.8 mm or less)		
Operation indicator		LED On when Input On			
External connection method			9-point terminal block	20-pin connector	20-pin connector

Tr Output Specifications (XBM "H, Slim" Type)

Item		Transistor Output Specifications	
		XBM-DN16S	XBM-DN32S
Output point		8 points	16 points
Insulation method		Photo coupler insulation	
Rated load voltage		DC 12/24 V	
Operation load voltage range		DC 10.2–26.4 V	
Max. load current		0.2 A/point *Note 1), 2 A/COM	
Off leakage current		0.1 mA or less	
Max. voltage drop when On		DC 0.4 V	
Surge absorber			
Response time	Off→On	1 ms or less	
	On→Off	1 ms or less (rated load, resistive load)	
Current output type		Sink output	
Common method		8 points/COM	16 points/COM
Proper wire size		Stranded wire 0.3–0.75 mm² (external diameter: 2.8 mm or less) *Note 2)	
External current consumption (mA) *Note 3)			
Operation indicator		LED On when Output On	
External connection method			

*Note 1) The positioning output is 0.1 A/point. *Note 2) This is the current consumption from the externally supplied DC 24 V power source.

Relay Output Specifications (XBM "Slim Type")

Item		Relay Output Specifications
		XBM-DR16S
Output point		8 points
Insulation method		Relay insulation
Rated load voltage/current		DC 24 V 2 A (resistive load) / AC 220 V 2 A (cos ϕ = 1), 5 A/COM
Min. load voltage/current		DC 5 V / 1 mA
Max. load voltage		AC 250 V, DC 125 V
Off leakage current		0.1 mA (AC 220 V, 60 Hz)
Max. On/Off frequency		3,600 operations/hour
Surge absorber		
Service life	Mechanical	20 million operations or more
	Electrical	100,000 operations or more at rated load voltage/current
		AC 200 V / 1.5 A, AC 240 V / 1 A (cos ϕ = 0.7): 100,000 operations or more
		AC 200 V / 1 A, AC 240 V / 0.5 A (cos ϕ = 0.35): 100,000 operations or more
		DC 24 V / 1 A, DC 100 V / 0.1 A (L/R = 7 ms): 100,000 operations or more
Response time	Off→On	10 ms or less
	On→Off	12 ms or less
Common method		8 points/COM
Proper wire size		Stranded wire 0.3–0.75 mm² (external diameter: 2.8 mm or less)
Internal current consumption (mA)		360
Operation indicator		LED On when Output On
External connection method		9-point terminal block

I/O circuit configuration

DC Input Circuit Configuration

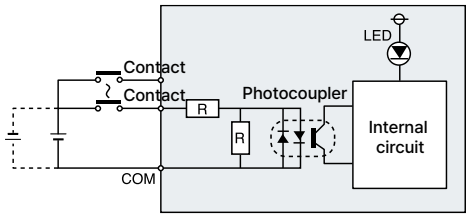

Relay Output Circuit Configuration

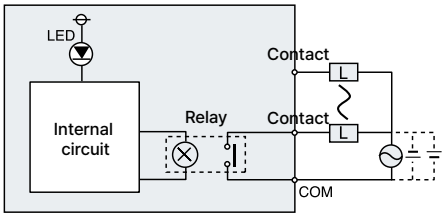

Sink-type transistor output

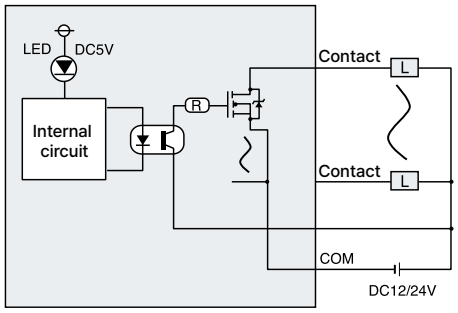

Source-type transistor output

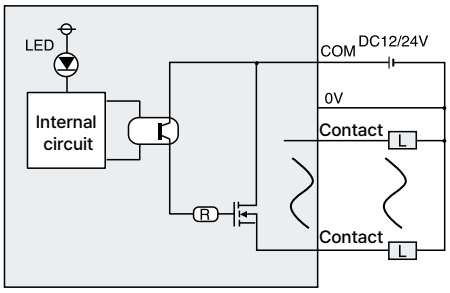

Digital Input Connection Examples

When connecting a DC-output external device to the DC input section,
use the wiring method shown below according to the type of the external device.

External Device		Input	External Device		Input
Relay Contact Output Type	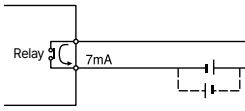	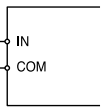	PNP Current Output Type	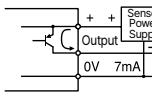	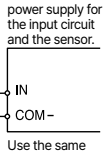
NPN Open Col-lector Output Type	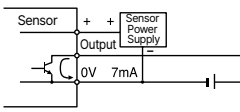	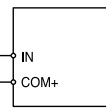	Voltage Output Type	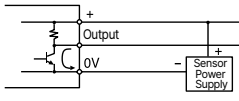	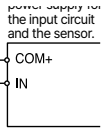
NPN Current Output Type	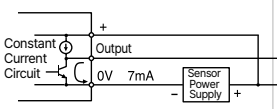	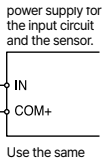			

XBE-DC08A DC Input (sink/source type)

Circuit configuration

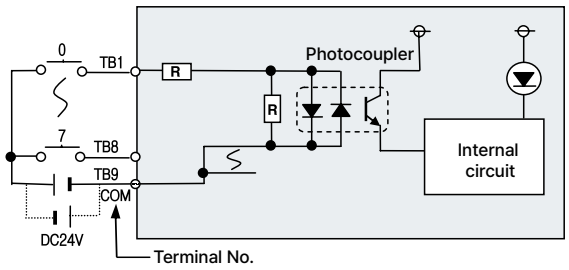

NO.	Contact
TB1	0
TB2	1
TB3	2
TB4	3
TB5	4
TB6	5
TB7	6
TB8	7
TB9	COM

Terminal layout

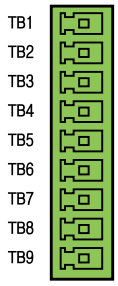

XBE-DC16A(B) DC Input (sink/source type)

Circuit configuration

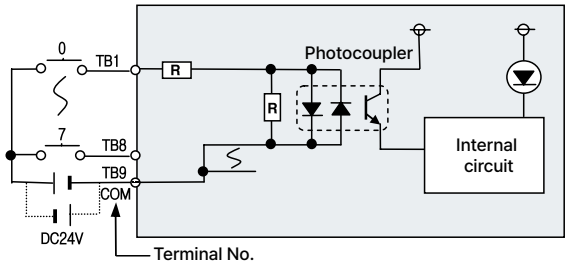

NO.	Contact
TB1	0
TB2	1
TB3	2
TB4	3
TB5	4
TB6	5
TB7	6
TB8	7
TB1	8
TB2	9
TB3	A
TB4	B
TB5	C
TB6	D
TB7	E
TB8	F
TB9	COM
TB10	COM

Terminal layout

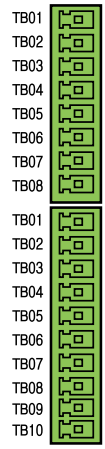

XBE-DC32ADC Input (sink/source type)

Circuit configuration

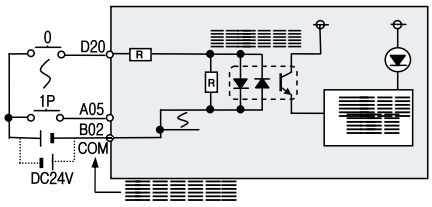

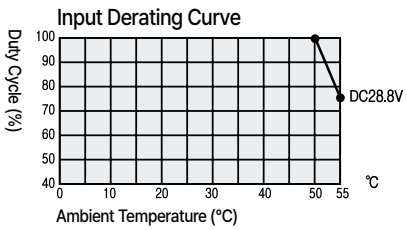

NO.	Contact	NO.	Contact
B20	00	A20	10
B19	01	A19	11
B18	02	A18	12
B17	03	A17	13
B16	04	A16	14
B15	05	A15	15
B14	06	A14	16
B13	07	A13	17
B12	08	A12	18
B11	09	A11	19
B10	0A	A10	1A
B09	0B	A09	1B
B08	0C	A08	1C
B07	0D	A07	1D
B06	0E	A06	1E
B05	0F	A05	1F
B04	NC	A04	NC
B03	NC	A03	NC
B02	COM	A02	COM
B01	COM	A01	COM

Terminal layout

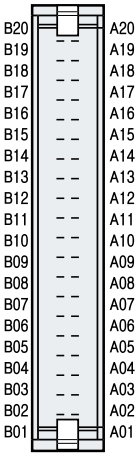

APPLICATION

XBE-RY08A Relay Output

Circuit configuration

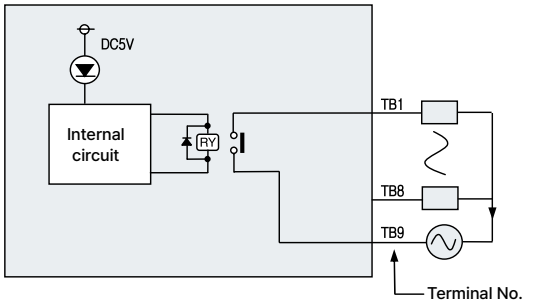

NO.	Contact
TB1	0
TB2	1
TB3	2
TB4	3
TB5	4
TB6	5
TB7	6
TB8	7
TB9	COM

Terminal layout

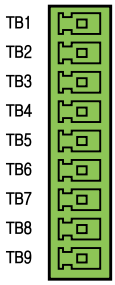

XBE-RY08B Relay Output (Independent))

Circuit configuration

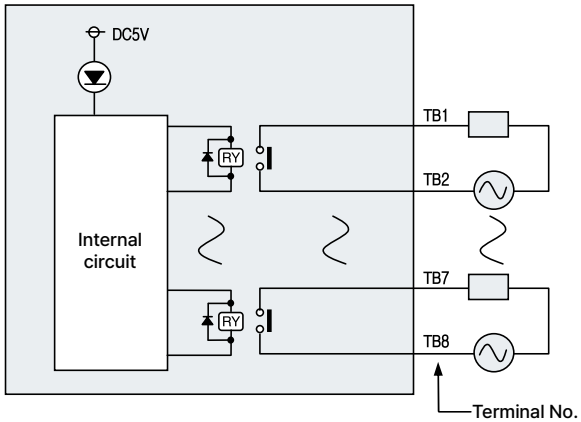

NO.	Contact
TB1	0
TB2	COM0
TB3	1
TB4	COM1
TB5	2
TB6	COM2
TB7	3
TB8	COM3
TB9	NC
TB1	4
TB2	COM4
TB3	5
TB4	COM5
TB5	6
TB6	COM6
TB7	7
TB8	COM7
TB9	NC

Terminal layout

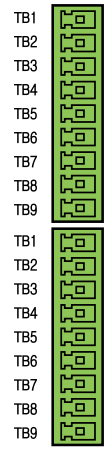

XBE-RY16A Relay Output

Circuit configuration

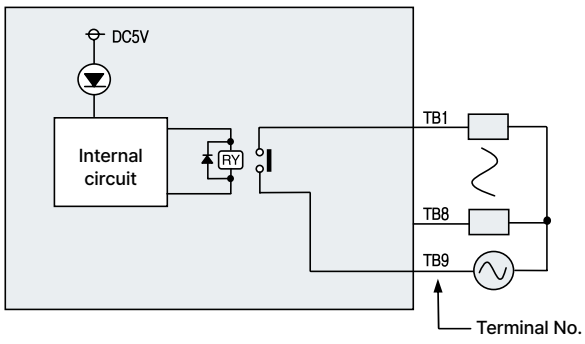

NO.	Contact
TB1	0
TB2	1
TB3	2
TB4	3
TB5	4
TB6	5
TB7	6
TB8	7
TB9	COM
TB1	8
TB2	9
TB3	A
TB4	B
TB5	C
TB6	D
TB7	E
TB8	F
TB9	COM

Terminal layout

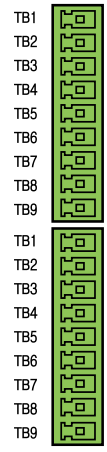

XBE-TN08A Transistor Output (Sink Type)

Circuit configuration

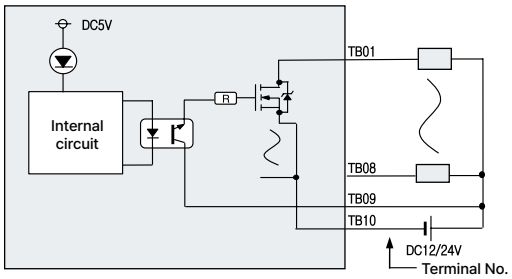

NO.	Contact
TB01	0
TB02	1
TB03	2
TB04	3
TB05	4
TB06	5
TB07	6
TB08	7
TB09	DC12/24V
TB10	COM

Terminal layout

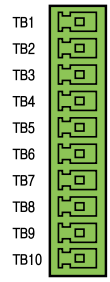

XBE-TN16A Transistor Output (Sink Type)

Circuit configuration

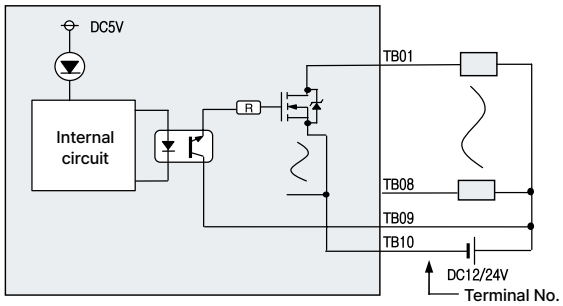

NO.	Contact
TB01	0
TB02	1
TB03	2
TB04	3
TB05	4
TB06	5
TB07	6
TB08	7
TB01	8
TB02	9
TB03	A
TB04	B
TB05	C
TB06	D
TB07	E
TB08	F
TB09	DC12/24V
TB10	COM

Terminal layout

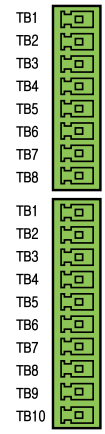

XBE-TN32A Transistor Output (Sink Type)

Circuit configuration

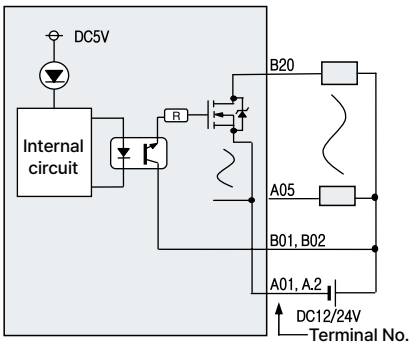

NO.	Contact	NO.	Contact
B20	00	A20	10
B19	01	A19	11
B18	02	A18	12
B17	03	A17	13
B16	04	A16	14
B15	05	A15	15
B14	06	A14	16
B13	07	A13	17
B12	08	A12	18
B11	09	A11	19
B10	0A	A10	1A
B09	0B	A09	1B
B08	0C	A08	1C
B07	0D	A07	1D
B06	0E	A06	1E
B05	0F	A05	1F
B04	NC	A04	NC
B03	NC	A03	NC
B02	DC12/ 24V	A02	COM
B01		A01	

Terminal layout

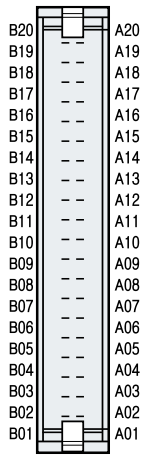

XBE-TP08A Transistor Output (SourceType)

Circuit configuration

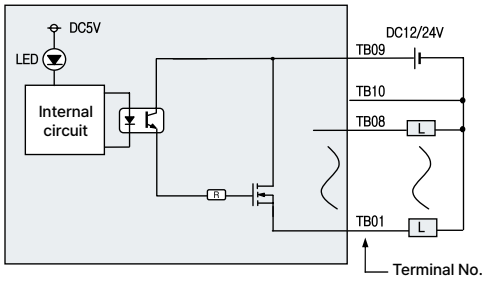

NO.	Contact
TB01	0
TB02	1
TB03	2
TB04	3
TB05	4
TB06	5
TB07	6
TB08	7
TB09	DC12/24V
TB10	OV

Terminal layout

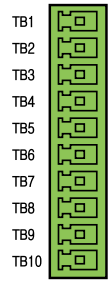

XBE-TP16A Transistor Output (Source Type)

Circuit configuration

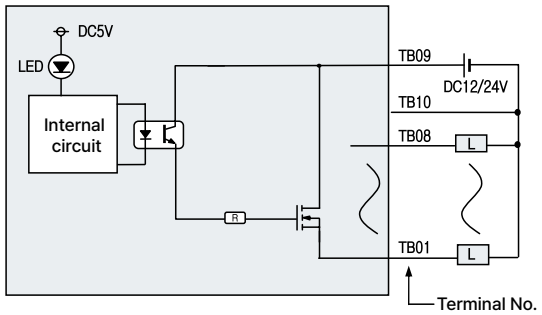

NO.	Contact
TB01	0
TB02	1
TB03	2
TB04	3
TB05	4
TB06	5
TB07	6
TB08	7
TB01	8
TB02	9
TB03	A
TB04	B
TB05	C
TB06	D
TB07	E
TB08	F
TB09	COM
TB10	OV

Terminal layout

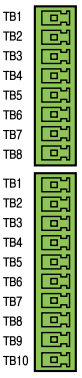

XBE-TP32A Transistor Output (Source Type)

Circuit configuration

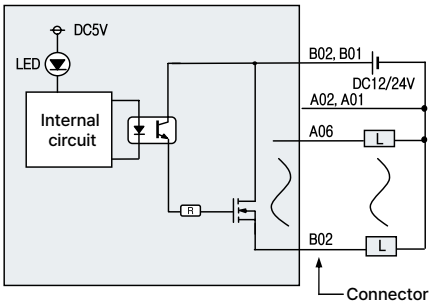

NO.	Contact	NO.	Contact
B20	00	A20	10
B19	01	A19	11
B18	02	A18	12
B17	03	A17	13
B16	04	A16	14
B15	05	A15	15
B14	06	A14	16
B13	07	A13	17
B12	08	A12	18
B11	09	A11	19
B10	0A	A10	1A
B09	0B	A09	1B
B08	0C	A08	1C
B07	0D	A07	1D
B06	0E	A06	1E
B05	0F	A05	1F
B04	NC	A04	NC
B03	NC	A03	NC
B02	COM	A02	COM
B01		A01	

Terminal layout

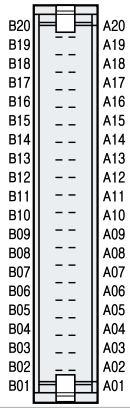

XBE-DR16A Mixed Module (DC Input Section)

Circuit configuration

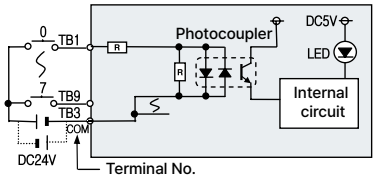

NO.	Contact
TB1	0
TB2	1
TB3	2
TB4	3
TB5	4
TB6	5
TB7	6
TB8	7
TB9	COM

Terminal layout

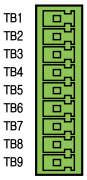

XBE-DR16A Mixed Module (Relay Output Section)

Circuit configuration

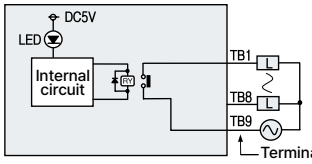

NO.	Contact
TB1	0
TB2	1
TB3	2
TB4	3
TB5	4
TB6	5
TB7	6
TB8	7
TB9	COM

Terminal layout

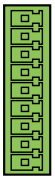

XBE-DN32A Transistor Output Mixed Module (Sink Type)

Circuit configuration

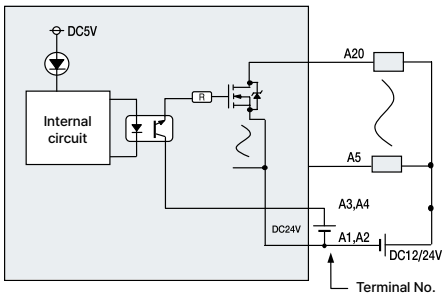

NO.	Contact	NO.	Contact
B20	00	A20	20
B19	01	A19	21
B18	02	A18	22
B17	03	A17	23
B16	04	A16	24
B15	05	A15	25
B14	06	A14	26
B13	07	A13	27
B12	08	A12	28
B11	09	A11	29
B10	0A	A10	2A
B09	0B	A9	2B
B08	0C	A8	2C
B07	0D	A7	2D
B06	0E	A6	2E
B05	0F	A5	2F
B04	NC	A4	P
B03	NC	A3	P
B02	IN_COM	A2	OUT_COM
B01		A1	

Terminal layout

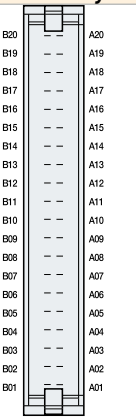

Performance specifications (XBC/XEC "U")

Item		Performance Specifications
Count Input Signal	Signal	Phase A, Phase B
	Input Type	Voltage input (open collector)
	Signal Level	DC 24 V
Max. Counting Speed		100 kpps
No. of Channels	1-phase	100 kpps, 8 channels
	2-phase	50 kpps, 4 channels
Counting Range		Signed 32-bit (–2,147,483,648 to 2,147,483,647)
Count Mode (Program Setting)		Linear count (when the 32-bit range is exceeded, carry/borrow occurs and the maximum/minimum count value is displayed)
		Ring count (repeated counting within the specified range)
Input Mode (Program Setting)		1-phase input
		2-phase input
		CW/CCW input
Signal Type		Voltage
Up/Down Count Selection	1-phase Input	Up/down counting selected by the phase B input
		Up/down counting selected by the phase B input
	2-phase Input	Operation determined by the phase difference between rising and falling edges
	CW/CCW	Phase A input: Up counting
		Phase B input: Down counting
Count Multiplier	1-phase Input	×1
	2-phase Input	×4
	CW/CCW	×1
Control Input	Signal	Preset command input (P0008 to P000F)
	Signal Level	DC 24 V input type
	Signal Type	Voltage
External Output	No. of Output Points	2 points/channel: Uses the output points of the main unit
	Type	Single comparison (>, >=, =, =<, <) or range comparison output (inclusive or exclusive); selected by program setting
	Output Type	Transistor output
Count Enable		Set by the program (counting is performed only when enabled)
Preset Function		
Additional Functions (Program Setting)		Latch counter
		Frequency measurement
		Counts per unit time (time setting range: 1 to 60,000 ms)
		Count hold

Terminal assignments

Item		Name		Description	
XBC	XEC	1-phase	2-phase	1-phase	2-phase
P000	%IX0.0.0	Ch0 counter input	Ch0 phase A input	Counter input terminal	Phase A input terminal
P001	%IX0.0.1	Ch1 counter input	Ch0 phase B input	Counter input terminal	Phase B input terminal
P002	%IX0.0.2	Ch2 counter input	Ch2 phase A input	Counter input terminal	Phase A input terminal
P003	%IX0.0.3	Ch3 counter input	Ch2 phase B input	Counter input terminal	Phase B input terminal
P004	%IX0.0.4	Ch4 counter input	Ch4 phase A input	Counter input terminal	Phase A input terminal
P005	%IX0.0.5	Ch5 counter input	Ch4 phase B input	Counter input terminal	Phase B input terminal
P006	%IX0.0.6	Ch6 counter input	Ch6 phase A input	Counter input terminal	Phase A input terminal
P007	%IX0.0.7	Ch7 counter input	Ch6 phase B input	Counter input terminal	Phase B input terminal
P008	%IX0.0.8	Ch0 preset 24 V	Ch0 preset 24 V	Preset input terminal	Preset input terminal
P009	%IX0.0.9	Ch1 preset 24 V	-	Preset input terminal	Not used
P00A	%IX0.0.10	Ch2 preset 24 V	Ch2 preset 24 V	Preset input terminal	Preset input terminal
P00B	%IX0.0.11	Ch3 preset 24 V	-	Preset input terminal	Not used
P00C	%IX0.0.12	Ch4 preset 24 V	Ch4 preset 24 V	Preset input terminal	Preset input terminal
P00D	%IX0.0.13	Ch5 preset 24 V	-	Preset input terminal	Not used
P00E	%IX0.0.14	Ch6 preset 24 V	Ch6 preset 24 V	Preset input terminal	Preset input terminal
P00F	%IX0.0.15	Ch7 preset 24 V	-	Preset input terminal	Not used
COMO		Input common	Input common	Common terminal	Common terminal

High-speed counter (XBC/XEC "H" "SU")

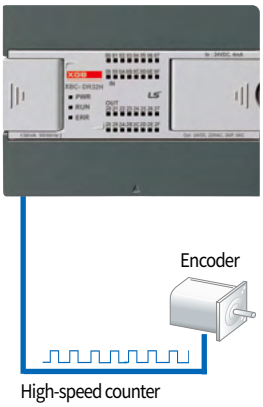

High-speed Counter Terminals

Terminal No.		1-phase		2-phase	
XBC	XEC	Name	Description	Name	Description
P000	%I×0.0.0	Ch0 counter input	Counter input terminal	Ch0 A-phase input	A-phase input terminal
P001	%I×0.0.1	Ch1 counter input	Counter input terminal	Ch0 B-phase input	B-phase input terminal
P002	%I×0.0.2	Ch2 counter input	Counter input terminal	Ch2 A-phase input	A-phase input terminal
P003	%I×0.0.3	Ch3 counter input	Counter input terminal	Ch2 B-phase input	B-phase input terminal
P004	%I×0.0.4	Ch4 counter input	Counter input terminal	Ch4 A-phase input	A-phase input terminal
P005	%I×0.0.5	Ch5 counter input	Counter input terminal	Ch4 B-phase input	B-phase input terminal
P006	%I×0.0.6	Ch6 counter input	Counter input terminal	Ch6 A-phase input	A-phase input terminal
P007	%I×0.0.7	Ch7 counter input	Counter input terminal	Ch6 B-phase input	B-phase input terminal
P008	%I×0.0.8	Ch0 preset 24 V	Preset input terminal	Ch0 preset 24 V	Preset input terminal
P009	%I×0.0.9	Ch1 preset 24 V	Preset input terminal	-	Not used
P00A	%I×0.1.0	Ch2 preset 24 V	Preset input terminal	Ch2 preset 24 V	Preset input terminal
P00B	%I×0.0.11	Ch4 preset 24 V	Preset input terminal	-	Not used
P00C	%I×0.0.12	Ch5 preset 24 V	Preset input terminal	Ch4 preset 24 V	Preset input terminal
P00D	%I×0.0.13	Ch6 preset 24 V	Preset input terminal	-	Not used
P00E	%I×0.0.14	Ch7 preset 24 V	Preset input terminal	Ch6 preset 24 V	Preset input terminal
P00F	%I×0.0.15	Ch8 preset 24 V	Preset input terminal	-	Not used
COMO		Input common	Common terminal	Input common	Common terminal

Performance specifications

Item		XBC/XEC "SU"	XBC/XEC "H"
Max. counting speed		100 kpps	
No. of channels	1-phase	100 kpps: 2 CH / 20 kpps: 6 CH	100 kpps: 4 CH / 20 kpps: 4 CH
	2-phase	50 kpps: 1 CH / 8 kpps: 3 CH	50 kpps: 2 CH / 10 kpps: 2 CH (×2)
			50 kpps: 2 CH / 8 kpps: 2 CH (×4)
Counting range		32-bit (–2,147,483,648 to 2,147,483,647)	
Input mode		1-phase input, 2-phase input, CW/CCW input	
Control input		Preset command input / DC 24 V / Voltage	
External output	Output points	2 points/channel (uses the output points of the main unit)	
	Type	Single comparison (>, ≥, =, ≤, <) or range comparison output	
	Output type	Relay, open collector output (Sink/Source)	
Additional functions		Latch counter; counts per unit time (time setting range: 1–60,000 ms)	

High-speed counter (XBM, BC/XEC "E" Type)

This function counts high-speed pulses from an encoder or pulse generator that cannot be processed by normal digital inputs.

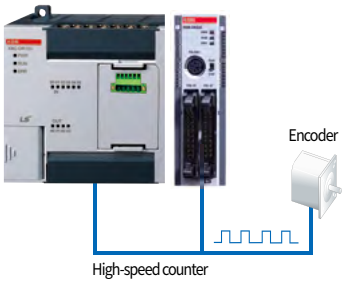

High-speed Counter Terminals

Contact No.	1-phase		2-phase	
	Name	Description	Name	Description
P000	Ch0 counter input	Counter input terminal	Ch0 A-phase input	A-phase input terminal
P001	Ch1 counter input	Counter input terminal	Ch0 B-phase input	B-phase input terminal
P002	Ch2 counter input	Counter input terminal	Ch2 A-phase input	A-phase input terminal
P003	Ch3 counter input	Counter input terminal	Ch2 B-phase input	B-phase input terminal
P004	Ch0 preset 24 V	Preset input terminal	Ch0 preset 24 V	Preset input terminal
P005	Ch1 preset 24 V	Preset input terminal	-	-
P006	Ch2 preset 24 V	Preset input terminal	Ch2 preset 24 V	Preset input terminal
P007	Ch3 preset 24 V	Preset input terminal	-	-
COM0	Input common	Common terminal	Input common	Common terminal

Performance specifications

Item		XBM		XBC/XEC "E"	
Max. counting speed		20 kpps		4 kpps	
No. of channels	1-phase	4 (20 kpps 4 CH)		4 (4kpps 4 CH)	
	2-phase	2	×2: 10 kpps ×4: 8 kpps	2	2kpps 2CH
Counting range		32-bit (−2,147,483,648 to 2,147,483,647)			
Input mode		1-phase input, 2-phase input, CW/CCW input			
Control input		Preset command input / DC 24 V / Voltage			
External output	Output points	1 point/channel (uses the output points of the main unit)			
	Type	Single comparison (>, ≥, =, ≤, <) or range comparison output			
	Output type	Relay, open collector output (Sink/Source)			
Additional functions		Latch counter; counts per unit time (time setting range: 1–60,000 ms)			

Electrical Specifications (Counter and Preset Inputs)

Item	Specifications
Input voltage	DC 24 V (20.4–28.8 V)
Input current	4 mA
ON voltage (min.)	DC 20.4 V
OFF voltage (max.)	DC 6 V

Encoder Wiring

Voltage Output Encoder Connection Example

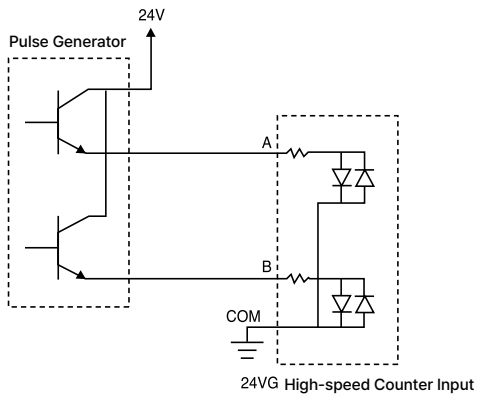

Open Collector Encoder Connection Example

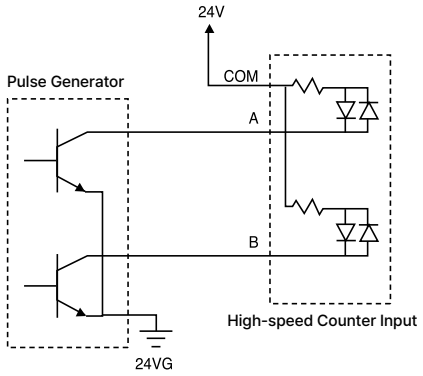

APPLICATION

Performance specifications (XBC/XEC-DN32UP, XBC/XEC-DR28UP, XBC/XEC-DP32UP)

The positioning function controls servo or stepping motors by sending high-speed pulse signals from the PLC output terminals to the corresponding motor drives.
This function is built into transistor-output main units of the XGB PLC series.

<table>
<tr><th colspan="2">Item</th><th>Performance Specifications</th></tr>
<tr><td colspan="2">No. of Control Axes</td><td>4 axes (non-isolated between channels)</td></tr>
<tr><td colspan="2" rowspan="3">Interpolation</td><td>2/3/4-axis linear interpolation</td></tr>
<tr><td>2-axis circular/elliptical interpolation</td></tr>
<tr><td>3-axis helical interpolation</td></tr>
<tr><td colspan="2">Control Method</td><td>Position control, Speed control, Speed/Position control, Position/Speed control, Feed control</td></tr>
<tr><td colspan="2">Control Unit</td><td>pulse, mm, inch, degree</td></tr>
<tr><td colspan="2" rowspan="2">Positioning Data</td><td>400 data entries per axis (operation step Nos. 1–400)</td></tr>
<tr><td></td></tr>
<tr><td rowspan="3">XG-PM</td><td>Connection</td><td>USB</td></tr>
<tr><td>Setting Data</td><td>Common, Basic, Extended, Manual operation, Homing, I/O signal parameters,
Operation data, Cam data, Command information</td></tr>
<tr><td>Monitor</td><td>Operation information, Trace input terminal information, Error information</td></tr>
<tr><td colspan="2">Back-up</td><td>Parameters and operation data saved to flash memory (no battery required; max. 1,000,000 writes)</td></tr>
<tr><td rowspan="6">Positioning</td><td>Positioning Coordinates</td><td>Absolute / Incremental</td></tr>
<tr><td>Position Range</td><td>
<table>
<tr><th></th><th>Absolute</th><th>Incremental</th><th>Speed/Position and Position/
Speed Switching Control</th></tr>
<tr><td>mm</td><td>-214748364.8 to 214748364.7 (μm)</td><td>-214748364.8 to 214748364.7 (μm)</td><td>-214748364.8 to 214748364.7 (μm)</td></tr>
<tr><td>Inch</td><td>-21474.83648 to 21474.83647</td><td>-21474.83648 to 21474.83647</td><td>-21474.83648 to 21474.83647</td></tr>
<tr><td>degree</td><td>-21474.83648 to 21474.83647</td><td>-21474.83648 to 21474.83647</td><td>-21474.83648 to 21474.83647</td></tr>
<tr><td>pulse</td><td>-2147483648 to 2147483647</td><td>-2147483648 to 2147483647</td><td>-2147483648 to 2147483647</td></tr>
</table>
</td></tr>
<tr><td>Speed Range</td><td>
<table>
<tr><td>mm</td><td>0.01–21474836.47 mm/min</td></tr>
<tr><td>Inch</td><td>0.001–2147483.647 inch/min</td></tr>
<tr><td>degree</td><td>0.001–2147483.647 degree/min</td></tr>
<tr><td>pulse</td><td>1–2,000,000 pulses/s: Line driver</td></tr>
<tr><td>rpm</td><td>0.1–100000.0 RPM</td></tr>
</table>
* Note: Values in mm, inch and degree must not exceed 2,000,000 pulses/s when converted to pulse units.
</td></tr>
<tr><td>Acceleration/
Deceleration Profile</td><td>Trapezoidal, S-curve</td></tr>
<tr><td rowspan="2">Acceleration/
Deceleration Time</td><td>0–2,147,483,647 ms</td></tr>
<tr><td>Selectable from 4 acceleration times and 4 deceleration times</td></tr>
<tr><td colspan="2">Manual Operation</td><td>JOG operation / MPG operation / Inching operation</td></tr>
<tr><td colspan="2">Homing Method</td><td>Near-point + home (OFF), Near-point + home (ON), Upper/lower limit + home, Near-point,
High-speed home, Upper/lower limit, Home</td></tr>
<tr><td colspan="2">Speed Change</td><td></td></tr>
<tr><td rowspan="4">External
Encoder
Input</td><td>No. of Channels</td><td>1 channel</td></tr>
<tr><td>Max. Input Frequency</td><td>Max. 200 kpps (Low-active, negative logic)</td></tr>
<tr><td>Input Method</td><td>Line driver input (RS-422A IEC specification)</td></tr>
<tr><td>Input Type</td><td>CW/CCW (×1), PULSE/DIR (×1), Phase A/B (×4)</td></tr>
<tr><td colspan="2">Control Cycle</td><td>1 ms (5 ms when continuous operation is enabled)</td></tr>
<tr><td colspan="2">Max. Output Speed</td><td>2 Mpps (500 kpps for PHASE)</td></tr>
<tr><td colspan="2">Max. Connection Distance</td><td>10 m</td></tr>
<tr><td colspan="2">Error Indication</td><td>LED indication</td></tr>
<tr><td colspan="2">Connection Connector</td><td>80-pin connector (two 40-pin connectors)</td></tr>
<tr><td colspan="2">Wire Size</td><td>24 AWG</td></tr>
<tr><td colspan="2">Current Consumption</td><td>Approx. 800 mA max.</td></tr>
<tr><td colspan="2">Weight</td><td>660g</td></tr>
</table>

Connector pin assignment

Pin Arrangement	Pin No. AX4	AX3	AX2	AX1	Signal Name		Signal Direction Positioning ↔ External	Operating Condition
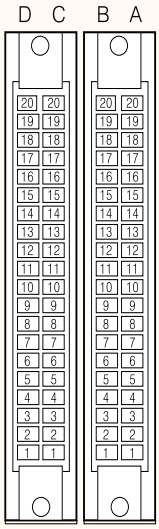 4 axe [Module Front View]	20A				MPG A+	Manual pulse generator / Encoder A+ input	←	
	20B				MPG A-	Manual pulse generator / Encoder A- input	←	
	19A				MPG B+	Manual pulse generator / Encoder B+ input	←	
	19B				MPG B-	Manual pulse generator / Encoder B- input	←	
	20C, 19C, 20D, 19D				NC	Not used		
	18D	18C	18B	18A	FP+	Pulse output (differential +)	→	
	17D	17C	17B	17A	FP-	Pulse output (differential -)	→	
	16D	16C	16B	16A	RP+	Pulse sign (differential +)	→	
	15D	15C	15B	15A	RP-	Pulse sign (differential -)	→	
	14D	14C	14B	14A	OV+	Upper limit	←	
	13D	13C	13B	13A	OV-	Lower limit	←	
	12D	12C	12B	12A	DOG	Near-point	←	
	11D	11C	11B	11A	EMG	Emergency stop	←	
					STOP	Deceleration stop signal		
	10D	10C	10B	10A	COM1	Common (OV+, OV-, DOG, EMG/STOP)	⇔	
	9D	9C	9B	9A	DR	Drive ready signal	←	
	8D	8C	8B	8A	DR_COM	Drive ready COM	⇔	
	7D	7C	7B	7A	SVON	Servo ON output	→	
	6D	6C	6B	6A	ARMRST	Servo alarm reset output	→	
	5D	5C	5B	5A	SVON/ RST_COM (COM2)	Servo ON / Servo alarm reset COM	⇔	
	4D	4C	4B	4A	HOME+5V	Home signal (+5 V)	←	
	3D	3C	3B	3A	HOME COM	Home signal (+5 V) common	⇔	
	1-2A, 1-2B, 1-2C, 1-2D				NC	Not used		

XBC/XEC “H”, XBC/XEC “SU”, XBM “S”

Specification \ Model		Performance Specifications		
		XBC-DN□□H/XEC-DN/DP□□H	XBC/XEC-DN/DP□□SU	XBM-DN □□S
No. of Control Axes / Interpolation		2 axes / 2-axis linear interpolation		
Pulse Output Method		Open collector (DC 24 V)		
Pulse Output Type		• Pulse + direction output • CW/CCW output	Pulse + direction output	
Control Method		Position control, speed control, speed/position switching control, position/speed switching control		
Control Unit		Pulse		
Positioning Data	No. of Data	80 data entries per axis(Operation step Nos. 1–80)		30 data entries per axis(Operation step Nos. 1–30)
	Setting Method	• Set using built-in positioning parameters • Set in the dedicated monitoring window • Set using the K area dedicated to positioning		
Positioning Monitor		• Special module monitoring in XG5000 • Monitoring via the K area		
Backup		Parameters and operation data → Flash memory K area → RAM (supercapacitor backup; battery backup for H type) Data can be saved to flash memory using the WRT application instruction.		
Positioning	Positioning Method	Absolute / Incremental		
	Position Address Range	–2,147,483,648 to 2,147,483,647 pulses		
	Speed Range	1–100,000 pps (1 pps increments)		
	Acceleration/Deceleration	Trapezoidal		
	Acceleration/Deceleration Time	0–10,000 ms (selectable from four acceleration/deceleration patterns)		
Max. Pulse Output Speed		100 kpps		
Max. Connection Distance		2 m		

XBM “S”

Connector pin assignment

Pin Arrangement	Type	Pin No. X-axis	Pin No. Y-axis	Signal Name		Signal Direction Positioning ↔ External	Rated Input / Rated Load
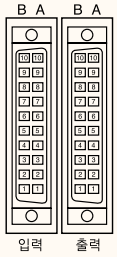	Input	B10(P0000)	B8(P0002)	Limit L	Lower limit	←	7 mA / 24 V
		B9(P0001)	B7(P0003)	Limit H	Upper limit	←	
		B6(P0004)	B4(P0006)	DOG	Near-point dog	←	4 mA / 24 V
		B5(P0005)	B3(P0007)	Origin	Home signal (+24 V)	←	
		B2/B1:COM, A2/A1:COM		Input COM	Input common terminal	←	
	Output	B10(P0020)	B9(P0021)	Pulse	Pulse output (open collector)	→	DC 5–24 V
		B8(P0022)	B7(P0023)	Direction	Direction output (open collector)	→	
		B2/B1:12/24V		DC 24 V	External power supply	→	
		A2/A1:COM		Output COM	Output common terminal	→	

XBC/XEC “H”, XBC/XEC “SU”

Terminal block pin assignment

Pin Arrangement *Note1)	Type	Pin No. X-axis *Note 1)	Pin No. Y-axis *Note 1)	Signal Name		Signal Direction Positioning ↔ External	Rated Input / Rated Load
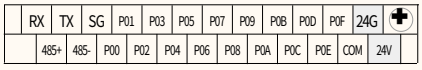	Input	P0008	P000A	Limit L	Lower limit	←	7.4 mA / 24 V
		P0009	P000B	Limit H	Upper limit	←	
		P000C	P000E	DOG	Near-point dog	←	
		P000D	P000F	Origin	Home signal (24 V)	←	
		COM		Input COM	Input common terminal	←	
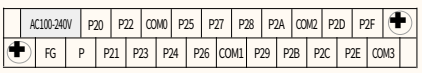	Output	P0020	P0021	Pulse	Pulse/CW output (open collector)	→	DC 5-24 V
		P0022	P0023	Direction	Direction/CCW output (open collector)	→	
		P		DC 24 V	External power supply	→	
		COM0		Output COM	Output common terminal	→	

*Note 1) XBC inputs (P00–P0F) and outputs (P20–P2F) correspond to XEC inputs (%IX0.0.0–%IX0.0.15) and outputs (%QX0.0.0–%QX0.0.15), respectively.

Wiring method

Wiring Using DC 5 V

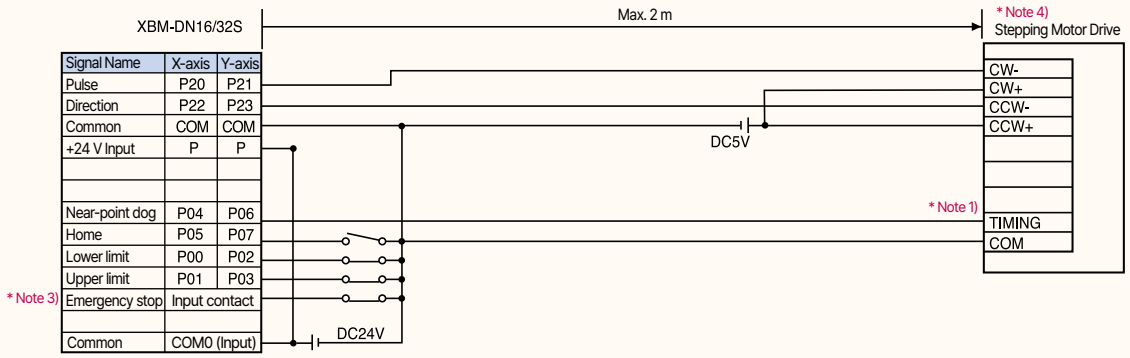

Wiring Using DC 24 V

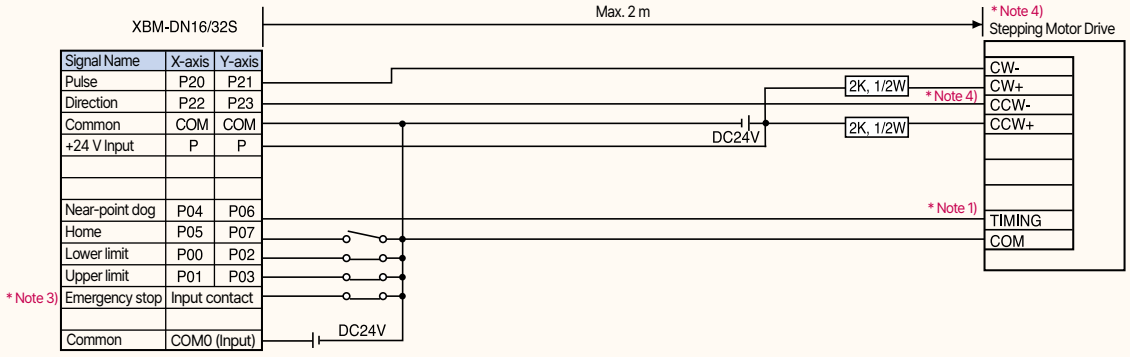

*Note 1) For accurate homing, combine the timing output and the home sensor signal using an AND circuit. Depending on the system, homing may instead be performed using the DOG signal or the home sensor signal without using the timing output. (The XGB home input voltage is DC 24 V.)
Example: For the VEXTA RKD series, the timing output turns ON each time the motor rotates 7.2°.
*Note 2) When using a DC 24 V power supply, connect a resistor suitable for the motor drive in series.
*Note 3) The home, near-point dog, and upper/lower limit signals are assigned to fixed input points. These points can be used as general-purpose inputs when the corresponding functions are not used. Emergency stop can be performed using the EMG instruction.
*Note 4) The XGB positioning function switches between forward and reverse rotation using the direction input, as shown in the diagram below. Be sure to set the stepping motor drive input mode to single-phase input.

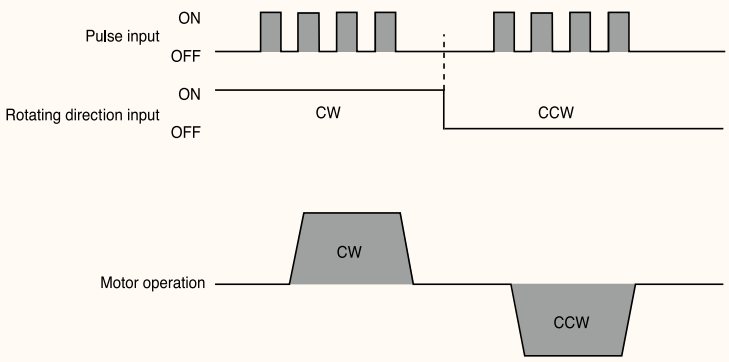

PID control features

- PID calculations are performed by the CPU, allowing control through PID parameters and the PLC program without a separate PID module.
- P, PI, PD, PID, and manual control modes can be easily selected to suit various control requirements.
- The control output can be converted to PWM (Pulse Width Modulation) and sent to a user-specified output point.
- Forward, reverse, and combined forward/reverse operation are supported.
- Cascade control improves the response to external disturbances.
- SV Ramp, PV Tracking, Delta MV, and various alarm functions support a wide range of PID control requirements.

Performance specifications

Item		Specifications
Number of Control Loops		16 independent control loops
Control Mode		P, PI, PD, PID control
Control Cycle		10–6,553.5 ms (setting unit: 0.1 ms)
PID Constant Setting Range	Proportional Constant (P)	Single-precision real (0–3.40282347e+38)
	Integral Constant (I)	Single-precision real (0–3.40282347e+38); unit: s
	Derivative Constant (D)	Single-precision real (0–3.40282347e+38); unit: s
SV Setting Range		INT (–32,768 to 32,767)
PV Input Range		INT (–32,768 to 32,767)
MV Range		INT (–32,768 to 32,767)
Manual MV Setting Range		INT (–32,768 to 32,767)
Additional Functions	Combined Forward/ Reverse Control	Automatically switches the control direction when the deviation from the SV exceeds the deadband.
	Cascade Control	Improves control accuracy by directly connecting the master and slave loops.
	SV Ramp	Sets the rate of change of the SV to prevent excessive load caused by sudden SV changes.
	Alarm Functions	Improves control stability with MV high/low limits, PV high/low limits, PV variation alarms, and other alarms.
	Auto-tuning	Provides auto-tuning using an enhanced auto-tuning algorithm.
	Other Functions	PWM output, PV Tracking, ΔMV, ΔPV, and other functions.

PID parameter area

Data configured in the PID parameters is stored in the K area.
PID operation can also be commanded by modifying the corresponding K-area data.

Loop	K Area *Note 1)	Symbol	Data Type	Default	Description
Common	K12000-F	_PID_MAN	Bit	Auto	PID output mode (0: Auto, 1: Manual)
	K12010-F	_PID_PAUSE	Bit	Run	PID pause (0: Run, 1: Pause)
	K12020-F	_PID_REW	Bit	Forward	Control direction (0: Forward, 1: Reverse)
	K12030-F	_PID_AW2D	Bit	Disabled	Dual anti-windup (0: Enabled, 1: Disabled)
	K12040-F	_PID_REM_RUN	Bit	Disabled	PID remote operation (0: Stop, 1: Run)
	K1205-K1207	Reserved	WORD	-	Reserved
	K12080-F	_PID_PWM_EN	Bit	Disabled	PWM output enable (0: Disabled, 1: Enabled)
	K12090-F	_PID_STD	Bit	-	PID operating status (0: Stopped, 1: Running)
	K12100-F	_PID_ALARM	Bit	-	PID alarm status (0: Normal, 1: Alarm)
	K12110-F	_PID_ERROR	Bit	-	PID error status (0: Normal, 1: Error)
	K1212-K1215	Reserved	WORD	-	Reserved
Loop 0	K1216	_PID00_SV	INT	0	PID set value (SV)
	K1217	_PID00_T_a	WORD	100	PID control cycle [0.1 ms]
	K1218	_PID00_K_p	REAL	1	PID proportional constant
	K1220	_PID00_T_i	REAL	0	PID integral time [s]
	K1222	_PID00_T_d	REAL	0	PID derivative time [s]
	K1224	_PID00_d_PV_max	WORD	0	PID PV variation limit
	K1225	_PID00_d_MV_max	WORD	0	PID MV variation limit
	K1226	_PID00_MV_max	INT	4000	PID MV upper limit
	K1227	_PID00_MV_min	INT	0	PID MV lower limit
	K1228	_PID00_MV_man	INT	0	PID manual output
	K1229	_PID00_PV	INT	-	PID process value (PV)
	K1230	_PID00_PV_old	INT	-	PID PV from the previous cycle
	K1231	_PID00_MV	INT	0	PID manipulated value (MV)
	K1232	_PID00_ERR	DINT	-	PID control error
	K1234	_PID00_MV_p	REAL	0	Proportional component of PID MV
	K1236	_PID00_Mv_i	REAL	0	Integral component of PID MV
	K1238	_PID00_MV_d	REAL	0	Derivative component of PID MV
	K1240	_PID00_DB_W	WORD	0	PID deadband setting
	K1241	_PID00_Td_lag	WORD	0	PID derivative filter coefficient
	K1242	_PID00_PWM	WORD	H' 20	PID PWM output point setting
	K1243	_PID00_PWM_Prd	WORD	100	PID PWM output cycle
	K1244	_PID00_SV_RAMP	WORD	0	PID SV ramp setting
	K1245	_PID00_PV_Track	INT	0	PID PV tracking setting
	K1246	_PID00_PV_MIN	INT	0	PID PV input lower limit
	K1247	_PID00_PV_MAX	Word	4000	PID PV input upper limit
	K1248	_PID00_ALM_CODE	Word	0	PID alarm code
	K1249	_PID00_ERR_CODE	INT	0	PID error code
	K1250	_PID00_CUR_SV	WORD	0	PID SV for the current cycle
	K1251-1255	Reserved	-	-	Reserved
Loop 1	K1256-1295	-	-	-	PID Loop 1 control parameters
	...				
Loop 15	K1816-K1855	-	-	-	PID Loop 16 control parameters

*Note 1) For the XEC special area (%K), refer to the XGB Analog User's Manual.

Performance specifications (XBF-AD04A)

Item			Performance Specifications	
No. of Channels			4 channels	
Analog Input Range	Type		Voltage	Current
	Range		DC 0–10 V (Input resistance: 1 MΩ min.)	DC 4–20 mA / DC 0–20 mA (Input resistance: 250 Ω)
Digital Output	Type		12-bit binary data	
	Range	Unsigned Integer	0–4000	
		Signed Integer	-2000 to 2000	
		Precise Value	0–1000	4000–2000 / 0–2000
		Percentage Value	0–1000	
Max. Resolution			2.5 mV (1/4000)	5 μA (1/4000)
Accuracy			±0.5% or less	
Max. Conversion Speed			1.5 ms/channel	
Absolute Max. Input			DC ±15V	±25mA
No. of Output Channels			4 channels	
Insulation Method			Photo coupler insulation between output terminals and PLC power supply (no isolation between channels)	
Connection Terminal			11-point terminal block	
Occupied I/O Points			64 points	
Max. No. of Modules	XBC/XEC “U”		10 modules	
	XBC/XEC “H”		10 modules	
	XBC/XEC “SU”		7 modules	
	XBM “S”		7 modules	
Current Consumption	Internal (DC 5 V)		120mA	
	External (DC 24 V)		62mA	
Weight			64g	
Additional Functions			Filtering, averaging (time, count)	

Analog-to-digital conversion characteristics (XBF-AD04A)

	Precise Value			Percentage	Signed Value	Unsigned Value
	4–20 mA	0–20 mA	0–10 V		-2000 to 2000	0–4000
Digital Output	2023	2023	1011	1011	2047	4047
	2000	2000	1000	1000	2000	4000
	1600	1500	750	750	1000	3000
	1200	1000	500	500	0	2000
	800	500	250	250	-1000	1000
	400	0	0	0	-2000	0
	381 *Note 1)				-2048 *Note 1)	-48 *Note 1)
Analog Input	0–10 V					0 2.5 5 7.5 10
	0–20mA					0 5 10 15 20
	4–20 mA					4 8 12 16 20

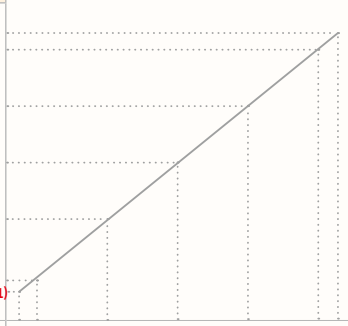

*Note 1) Supported only when the analog input range is 4–20 mA.

Performance specifications (XBF-AD08A)

Item			Performance Specifications	
No. of Channels			8 channels	
Analog Input Range	Type		Voltage	Current
	Range		DC 1–5V / DC 0–5 V DC 0–10 V (Input resistance: 1 MΩ)	DC 4–20 mA / DC 0–20 mA (Input resistance: 250 Ω)
			Set the input range for each channel in the user program or I/O parameters, then set the external voltage/current selector switch.	
Digital Output	Type		12-bit binary data	
	Range	Unsigned Integer	0–4000	
		Signed Integer	-2000 to 2000	
		Precise Value	100–500 (DC 1–5 V)	400–2000 (DC 4–20 mA)
			0–500 (DC 0–5 V), 0–1000 (DC 0–10 V)	0–2000 (DC 0–20 mA)
		Percentage Value	0–1000	
Max. Resolution			1/4000	
			1.25 mV (DC 1–5 V, 0–5 V) 2.5 mV (DC 0–10 V)	5 μA (DC 4–20 mA, 0–20 mA)
Accuracy			±0.5% or less	
Max. Conversion Speed			1.5 ms/channel	
Absolute Max. Input			DC ±15 V	DC ±25 mA
Additional Functions	Filter		Digital filter (4–64,000 ms)	
	Averaging		Time averaging (4–16,000 ms)	
			Count averaging (2–64,000 samples)	
			Moving average (2–100 samples)	
	Alarm		Wire-break detection (DC 1–5 V, DC 4–20 mA)	
Insulation Method			Photo coupler insulation between I/O terminals and PLC power supply (no isolation between channels)	
Input Terminal			11-point terminal block	
Occupied I/O Points			Fixed: 64 points	
Max. No. of Modules		XBC/XEC “U”	10 modules	
		XBC/XEC “H”	10 modules	
		XBC/XEC “SU”	7 modules	
		XBM “S”	7 modules	
Current Consumption		Internal (DC 5 V)	105 mA	
		External (DC 24 V)	85 mA	
Weight			81 g	
Module Power Supply			DC 20.4–28.8 V	

*Note 1) To use the 8-channel analog input module, a main unit with the version specified in the table below or later is required.

Analog-to-digital conversion characteristics (XBF-AD08A)

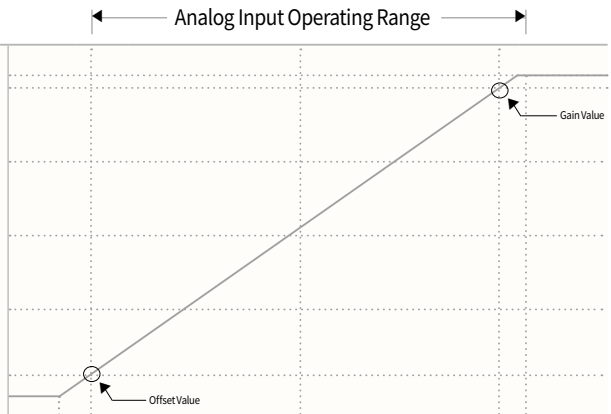

Digital Output	1011 1000	2047 2000	4047 4000				
	750	1000	3000				
	500	500	2000				
	250	-1000	1000				
	0 -12	-2000 -2048	0 -48				
Analog Input	DC 4–20 mA			3.81	4	12	12 20.16
	DC 0–20 mA			-0.24	0	10	10 20.23
	DC 1–5 V			0.96	1	3	3 5.04
	DC 0–5 V			-0.06	0	2.5	2.5 5.05
	DC 0–10 V			-0.12	0	5	5 10.11

APPLICATION

Performance specifications (XBF-AD04C)

Item			Performance Specifications	
No. of Channels			4 channels	
Analog Input Range	Type		Voltage	Current
	Range		DC 1–5 V, DC 0–5 VDC 0–10 V, DC –10–10 V (Input resistance: 1 MΩ)	DC 4–20 mA DC 0–20 mA (Input resistance: 250 Ω)
			Set the input range for each channel using the user program or I/O parameters, then wire for voltage/current input. For voltage input, use the channel's V+ and COM terminals. For current input, connect V+ and I+ together and use COM.	
Digital Output	Type		16-bit binary value (14-bit data)	
	Range	Unsigned Integer	0–16,000	
		Signed Integer	–8,000–8,000	
		Scaled Value	1,000–5,000 (1–5 V) 0–5,000 (0–5 V) 0–10,000 (0–10 V) –10,000–10,000 (±10 V)	4,000–20,000 (4–20 mA) 0–20,000 (0–20 mA)
		Percentage Value	0–10,000	
Max. Resolution			1/16,000	
			0.250 mV (1–5 V) 0.625 mV (0–10 V) 0.3125 mV (0–5 V) 1.250 mV (±10 V)	1.0 µA (4–20 mA) 1.25 µA (0–20 mA)
Accuracy			±0.2% or less (ambient temperature: 25°C) ±0.3% or less (ambient temperature: 0–55°C)	
Max. Conversion Speed			1 ms/channel	
Absolute Max. Input			DC ±15V	DC ±30mA
Additional Functions	Filter		Digital filter (4–64,000 ms)	
	Averaging		Time averaging (4–16,000 ms)	
			Count averaging (2–64,000 samples)	
	Alarm		Open-wire detection (DC 1–5 V, DC 4–20 mA)	
	Valid Conversion Value Hold		Select whether to hold the converted value when the valid input range is exceeded.	
	Warning		High/low warning flags are generated when the valid input range is exceeded.	
Insulation Method			Photo coupler isolation between I/O terminals and PLC power supply (no isolation between channels)	
Input Terminal			15-point terminal block	
Occupied I/O Points			Fixed: 64 points	
Max. No. of Modules	XBC/XEC "U"		10 modules	
	XBC/XEC "H"		10 modules	
	XBC/XEC "SU"		7 modules	
	XBM "S"		7 modules	
Current Consumption	External (DC 24 V)		105 mA	
	Internal (DC 5 V)		100 mA	
Weight			72 g	
Module Power Supply			20.4–28.8 V	

Main Unit Type / Software	Model	Supported Version
XGB Modular Standard Main Unit (XBMS)	XBM-DxxS	Ver. 3.30 or later
XGB Compact Standard Main Unit (XBCS)	XBC-DxxS	Ver. 1.20 or later
	XBC-DxxSU	Ver. 1.30 or later
XGB Compact High-performance Main Unit (XBCH)	XBC-DxxH	Ver. 2.20 or later
XGB IEC High-performance Main Unit (XECH)	XEC-DxxH	Ver. 1.50 or later
XGB IEC Standard Main Unit (XECS) PADT	XEC-DxxSU XG5000	Ver. 1.10 or later Ver. 3.64 or later

Performance specifications (XBF-DV04A, DC04A)

Item			Performance Specifications	
			XBF-DV04A	XBF-DC04A
No. of Output Channels			4 channels	
Analog Output	Type		Voltage	Current
	Range		DC 0–10 V (Load resistance: 2 kΩ or more)	DC 4–20 mA, DC 0–20 mA (Load resistance: 510 Ω or less)
Digital Input	Type		12-bit binary data	
	Range	Unsigned Integer	0–4,000	0–4,000
		Signed Integer	–2,000 to 2,000	–2,000 to 2,000
		Scaled Value	0–1,000	400–2,000 / 0–2,000
		Percentage Value	0–1,000	0–1,000
Max. Resolution			2.5 mV (1/4,000)	5 μA (1/4,000)
Accuracy			±0.5% or less	
Max. Conversion Speed			1 ms/channel	
Absolute Max. Output			DC ±15V	DC +25mA
Insulation Method			Photo coupler isolation between output terminals and PLC power supply (no isolation between channels)	
Output Terminal			11-point terminal block	
Occupied I/O Points			Fixed: 64 points	
Max. No. of Modules	XBC/XEC “U”		10 modules	
	XBC/XEC “H”		10 modules	
	XBC/XEC “SU”		7 modules	
	XBM “S”		7 modules	
Current Consumption	Internal (DC 5 V)		110mA	110mA
	External (DC 24 V)		70mA	120mA
Weight			64g	70g

Analog-to-digital conversion characteristics

	XBF-DC04A		XBF-DV04A
	0–20 mA	4–20 mA	0–10 V
Analog Output	20 mA	20 mA	10 V
	15 mA	16 mA	7.5 V
	10 mA	12 mA	5 V
	5 mA	8 mA	2.5 V
	0 mA	4 mA	0 V

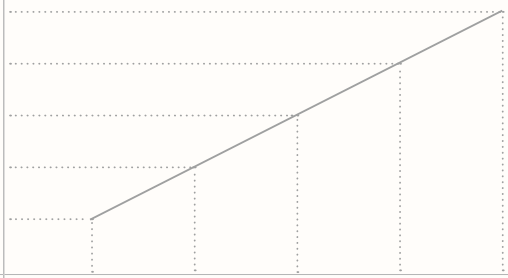

Digital Input	Unsigned Integer	0–4000		0	1000	2000	3000	4000
	Signed Integer	-2000 to 2000		-2000	-1000	0	1000	2000
	Percentage Value	0–1000		0	250	500	750	1000
	Scaled Value	0–10 V	0–1000	0	250	500	750	1000
		4–20 mA	400–2000	400	800	1200	1600	2000
		0–20 mA	0–2000	0	500	1000	1500	2000
		0–1.2 mA	0–1200	0	300	600	900	1200

Performance specifications (XBF-DV04C, DC04C)

Item			Specifications	
			XBF-DV04C	XBF-DC04C
Output channels			4 channels	
Analog output	Type		Voltage	Current
	Range		DC 1–5 V, DC 0–5 V DC 0–10 V, DC -10–10 V (Load resistance: 1 kΩ min.)	DC 4–20 mA DC 0–20 mA (Load resistance: 600 Ω min.)
	Analog range selection		The output range for each channel is set by the user program or I/O parameter.	
Digital input	Data format		16-bit binary data (Data: 14 bits)	
	Range	Unsigned value	0–16,000	
		Signed value	-8,000 to 8,000	
		Precise value	1,000–5,000 (1–5 V) 0–5,000 (0–5 V) 0–10,000 (0–10 V) -10,000–10,000 (±10 V)	4,000–20,000 (4–20 mA) 0–20,000 (0–20 mA)
		Percentile value	0–10,000	
Max. resolution			1/16,000	
			0.250 mV (1–5V) 0.3125 mV (0–5V)	0.625 mV (0–10V) 1.250 mV (±10V)	1.0 µA (4–20 mA) 1.25 µA (0–20 mA)
Accuracy			±0.2% or less (ambient temperature: 25°C) ±0.3% or less (ambient temperature: 0–55°C)	
Max. conversion speed			1 ms/channel	
Additional functions			Channel output status setting function (selectable output: previous, minimum, midpoint, maximum)	
			Interpolation method setting (linear interpolation, S-curve interpolation)	
Insulation method			Insulation between output terminal and PLC power; no insulation between channels	
Connection terminal			11-point terminal block	
Power supply			External DC 24 V	
Occupied I/O points			Fixed type: 64 points	
Max. number of modules			7 modules (when using XBM(C)-DxxxS type)	
			10 modules (when using XBC(E)C-DxxxH type)	
Weight			68g	69g
Current consumption	Internal (DC 5 V)		70 mA	
	External (DC 24 V)		160 mA	

Analog Input/Output XBF-AH04A

Performance specifications (XBF-AH04A)

Item			Specifications				
Input	Number of channels		2 channels				
	Analog input	Range	DC 1–5 V	DC 0–5 V	DC 0–10 V	DC 4–20 mA	DC 0–20 mA
		Input resistance	1 MΩ			250 Ω	
		Range selection	Selected using XG5000 I/O parameters or a user program				
		Voltage/Current selection	External voltage/current selection switch				
	Digital output	Unsigned value	0–4,000			0–4,000	
		Signed value	-2,000 to 2,000			-2,000 to 2,000	
		Percentile value	0–1,000			0–1,000	
		Precise value	100–500	0–500	0–1,000	400–2,000	0–2,000
		Resolution (1/4,000)	1.25 mV		2.5 mV	5.0 uA	
		Range selection	Selected by XG5000 I/O parameter or user program				
	Accuracy		±0.5% or less				
	Max. absolute output		DC ±15 V			DC ±25 mA	
	Max. conversion speed		1 ms/channel				
Output	Number of channels		2 channels				
	Analog output	Range	DC 1–5 V	DC 0–5 V	DC 0–10 V	DC 4–20 mA	DC 0–20 mA
		Load resistance	2 kΩ min.			510 Ω max.	
		Range selection	Selected by XG5000 I/O parameter or user program				
		Voltage/Current selection	External voltage/current selection switch				
	Digital input	Unsigned value	0–4,000			0–4,000	
		Signed value	-2,000 to 2,000			-2,000 to 2,000	
		Percentile value	0–1,000			0–1,000	
		Precise value	100–500	0–500	0–1,000	400–2,000	
		Resolution (1/4,000)	1.25 mV		2.5 mV	5.0 uA	
		Range selection	Selected by XG5000 I/O parameter or user program				
	Accuracy		±0.5% or less				
	Max. absolute output		DC ±15 V			DC ±25 mA	
	Max. conversion speed		1 ms/channel				
Insulation method			Photocoupler insulation between I/O terminal and PLC power, no insulation between channels				
Connection terminal			11-point terminal block				
Occupied I/O points (XBM/XBC)			64 points (fixed type)				
Current consumption	DC 5 V (internal input)		120 mA				
	DC 24 V (external input)		130 mA				

*Note 1) Supported versions: XBM O/S V2.4, XBC O/S V1.7, XEC O/S V1.0, XG5000 V3.0 or later.

Part names and functions

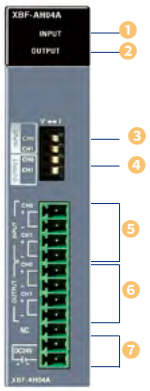

NO.	Name	Description
1	INPUT LED	Indicates input operation status • Green: Normal operation • Red: Error (1 s flickering) • Off: Power off or module malfunction
2	OUTPUT LED	Indicates output operation status • Green: Normal operation • Red: Error (1 s flickering) • Off: Power off or module malfunction
3	Input voltage/current selection switch	Voltage/current selection switch for input
4	Output voltage/current selection switch	Voltage/current selection switch for output
5	Input terminal block	Terminal for connection to an external input device
6	Output terminal block	Terminal for connection to an external output device
7	External power supply terminal	Terminal for external DC 24 V power supply

Analog Area

Device	Description	Size	R/W
U0x.00.0	Module error	Bit	R
U0x.00.1	Module ready	Bit	
U0x.01.0	Input channel 0 operation status	Bit	
U0x.01.1	Input channel 1 operation status	Bit	
U0x.01.2	Output channel 0 operation status	Bit	
U0x.01.3	Output channel 1 operation status	Bit	
U0x.01.4	Input channel 0 disconnection detected	Bit	
U0x.01.5	Input channel 1 disconnection detected	Bit	
U0x.01.8	Input channel 0 error	Bit	
U0x.01.9	Input channel 1 error	Bit	
U0x.01.A	Output channel 0 error	Bit	
U0x.01.B	Output channel 1 error	Bit	
U0x.04	Input channel 0 digital output	Word	
U0x.05	Input channel 1 digital output	Word	
U0x.06.0	Output channel 0 status setting	Bit	R/W
U0x.06.1	Output channel 1 status setting	Bit	
U0x.07	Output channel 0 digital input	Word	
U0x.08	Output channel 1 digital input	Word	

*Note) For the XEC special area (%U), refer to the XGB Analog User's Manual.

Conversion characteristics

	Precise value					Percentile value	Signed value	Unsigned value
	0–5 V	1–5 V	0–10 V	4–20 mA	0–20 mA			
Digital output (Digital input)	500	500	1,000	2,000	2,000	1,000	2,000	4,000
	375	400	750	1,600	1,500	750	1,000	3,000
	250	300	500	1,200	1,000	500	0	2,000
	125	200	250	800	500	250	-1,000	1,000
	0	100	0	400	0	0	-2,000	0

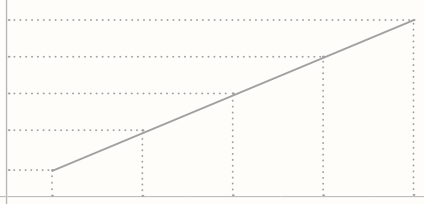

Analog input (Analog output)	0–10 V	0	2.5	5	7.5	10
	1–5 V	1	2	3	4	5
	0–5 V	0	1.25	2.5	3.75	5
	0–20 mA	0	5	10	15	20
	4–20 mA	4	8	12	16	20

APPLICATION

Performance specifications (XBF-RD04A, RD01A)

Item		Specifications	
		XBF-RD04A	XBF-RD01A
Number of input channels		4 channels	1 channel
Input sensor type	PT100	JIS C1604-1997	
	JPT100	JIS C1604 - 1981, KS C1603 - 1991	
Input temperature range	PT100	-200 to 600°C	
	JPT100	-200 to 600°C	
Digital output	PT100	-2,000 to 6,000	
	JPT100	-2,000 to 6,000	
	Scaling	0 to 4,000	
Accuracy	Normal temperature (25°C)	±0.3% or less	
	Full range (0~55°C)	±0.5% or less	
Conversion speed		40 ms/channel	
Insulation method	Between channels	Non-insulated	
	Terminal-PLC power	Photocoupler insulation	
Terminal		15-point terminal block	
Occupied I/O points (XBM/XBC)		Fixed type: 64 points	
Sensor wiring method		3-wire	
Current consumption	Internal DC 5 V	100 mA	
	External DC 24 V	100 mA	

Part names and functions

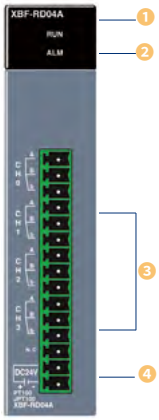

NO.	Name	Description
1	RUN LED	Displays module operation status • Green: Normal operation • Red: Error (0.2 s flickering) • Off: Power off or module malfunction
2	ALM LED	Displays module disconnection status (alarm LED) • Red: Line disconnection error (1 s flickering) • Off: Normal operation
3	Terminal block	Wiring terminal block for connecting the temperature sensor from an external measuring device
4	External power supply terminal	Terminal for external DC 24 V power supply

Temperature conversion characteristics

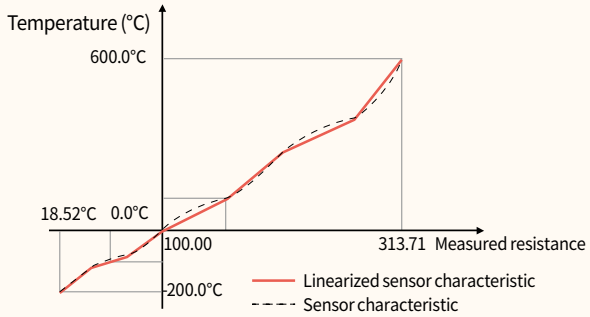

PT100(JIS1604-1997)

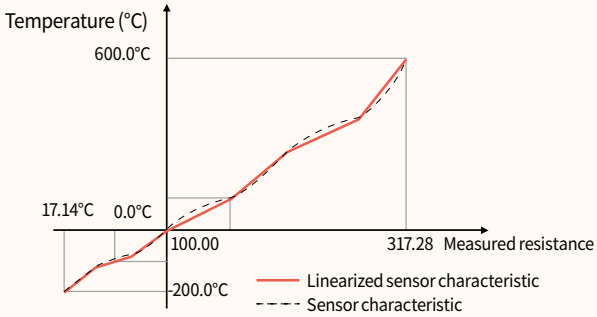

JPT100(JIS1604-1981, KSC1603-1991)

RTD sensor connection

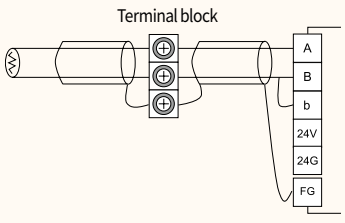

2-wire wiring

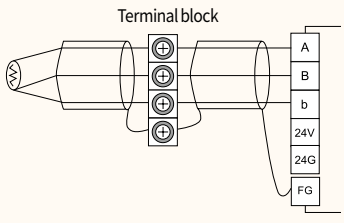

3-wire wiring

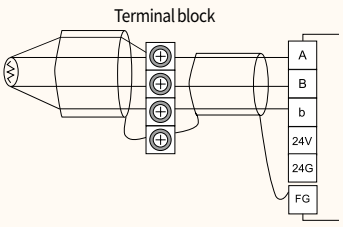

4-wire wiring

Performance specifications (XBF-TC04S)

Item		Specifications
Number of input channels		4 channels
Input sensor type		Thermocouple K/J/T/R, JIS C1602-1995
Temperature input range	K	-200.0°C to 1300.0°C
	J	-200.0°C to 1200.0°C
	T	-200.0°C to 400.0°C
	R	0.0°C to 1700.0°C
Digital output	Temperature display unit	Display down to one decimal place K, J, T: 0.1°C; R: 0.5°C
	Scaling display (Defined by user)	Unsigned scaling (0–65,535)
		Signed scaling (-32,768 to 32,767)
Accuracy	Normal temperature (25°C)	±0.2% or less
	Temperature coefficient	±100 ppm/°C
Conversion speed		50 ms/channel
Insulation	Terminal–internal circuit	Photocoupler insulation
	Terminal–drive power	DC/DC converter insulation
	Between channels	PhotoMOS relay insulation
Dielectric withstand voltage		400 V AC, 50/60 Hz, 1 minute, leakage current 10 mA or less
Insulation resistance		500 V DC, 10 MΩ or more
Reference junction compensation	Compensation method	Automatic compensation by RJC sensor (thermistor)
	Compensation accuracy	±1.0°C
Current consumption	Internal DC 5 V	100 mA
	External DC 24 V	100 mA

Part names and functions

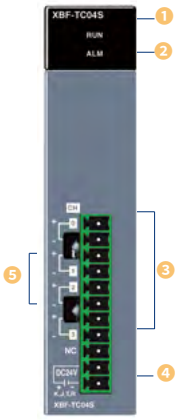

NO.	Name	Description
1	RUN LED	Displays module operation status • Green: Normal operation • Red: Error (0.2 s flickering) • Off: Power off or module malfunction
2	ALM LED	Displays module disconnection status (alarm LED) • Red: Line disconnection error (1 s flickering) • Off: Normal operation
3	Terminal block	Wiring terminal block for connecting thermocouple sensors (K, J, T, R) from external measuring devices
4	External power supply terminal	Terminal for external DC 24 V power supply
5	RJC	Device for reference junction compensation (RJC)

*Note 1) XBM can be used with the base unit O/S version V1.8 or later. (XBC is supported by default.) XG5000 V2.2 or later is required.

Accuracy and conversion performance

Sensor Type	Measurement Temperature Range	Displayed Temperature Range	Accuracy		Resolution
			Normal Temperature (25°C)	Operating Temperature (0–55°C)	
K	-200.0°C to 1300.0°C	-270.0°C to -200.0°C		* Note 1)	
		-200.0°C to 0.0°C	±3.0°C	±7.5°C	0.2°C
		0.0°C to 1300.0°C	±3.0°C	±7.5°C	0.1°C
		1300.0°C to 1372.0°C		* Note 1)	
J	-200.0°C to 1200.0°C	-210.0°C to -200.0°C		* Note 1)	
		-200.0°C to -100.0°C	±2.8°C	±7.0°C	0.2°C
		-100.0°C to 1200.0°C	±2.8°C	±7.0°C	0.1°C
T	-200.0°C to 400.0°C	-270.0°C to -200.0°C		* Note 1)	
		-200.0°C to -40.0°C	±1.2°C	±3.0°C	0.1°C
R	0.0°C to 1700.0°C	-50.0°C to 0.0°C		* Note 1)	
		0.0°C to 1700.0°C	±3.5°C	±8.5°C	0.5°C
		1700.0°C to 1768.0°C		* Note 1)	

*Note 1) Temperature measurement is available, but accuracy and resolution are not guaranteed in this range.

Thermocouple sensor connection

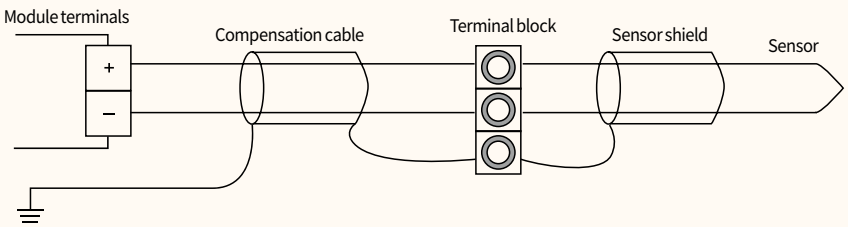

APPLICATION

Performance specifications (XBF-TC04TT)



Item	Specifications			
Control loop	4 loop			
Thermocouple type and input range	K	-200.0 to 1300.0°C		
		0.0 to 500.0°C		
	J	-200.0 to 1200.0°C		
		0.0 to 500.0°C		
	T	-200.0 to 800.0°C		
Input Accuracy	±0.2% (at 25°C) Temperature Coefficient: ±100 ppm/°C (0.01%/°C) Exception: ±2.0°C for Type T in the range of −200 to −100°C.			
	Temperature coefficient	±100 ppm/°C (0.01%/°C)		
Cold junction compensation	Compensation method	Automatic compensation by RJC sensing		
	Compensation degree	±2.0°C		
Sampling period	500 ms / 4 loops			
Control method	PID CONTROL, ON/OFF CONTROL			
Control parameter	Target value (SV)	Setting within range according to input type (temperature unit setting)		
	Proportional gain	0: ON/OFF CONTROL, REAL		
	Integral time	0: Except integral control, REAL		
	Derivative time	0: Except derivative control, REAL		
Output	Output point	4		
	Transistor output: Rated load voltage	DC 24 V		
	Transistor output: Max. load current	0.1 A / Output point		
	Transistor output: Max. voltage drop when on	DC 1.2 V or less		
	Transistor output: Leakage current when off	0.1 mA or less		
	Transistor output: Response time	ON ⇒ OFF	1 ms or less	
		OFF ⇒ ON	1 ms or less	
	Transistor output: Control output cycle	0.5 to 120.0 sec (Setting unit: 0.5 sec.)		
	Transistor output: Time proportional resolution	Larger one of either 10 ms or 0.05% of the full-scale		
Insulation	**Insulation item**	**Insulation method**	**Dielectric strength**	**Insulation resistance**
	Between input channels	Photo relay	400 V AC, 50/60 Hz, 1 min, leakage current 10 mA or less	500 V DC, 10 MΩ or more
	Input terminal−PLC power	Photocoupler		
	Output terminal−PLC power	Non-insulation		
	Between output channels			
Averaging function	Weighted average	0 to 99% (setting range)		
	Moving average	0 to 99 times (setting range)		
Warm-up	20 minutes or above			
Maximum rate of ambient temperature change Note)	0.5°C/min (30°C/hour) or less			
Access terminal	16-point terminal (10-point terminal 1 ea, 6-point terminal 1 ea)			
I/O occupation point	Fixed: 64 points			
Max. no. of installations	XBC/XEC “U”	10 ea		
	XBC/XEC “H”	10 ea		
	XBC/XEC “SU”	7 ea		
	XBM “S”	7 ea		
Current consumed	Internal DC 5 V: 120 mA, External DC 24 V: 100 mA			
Power supply	5 V, DC 24 V			

Note) If the ambient temperature variation rate exceeds this criterion, the specified reference junction compensation error cannot be guaranteed.

Thermocouple wiring

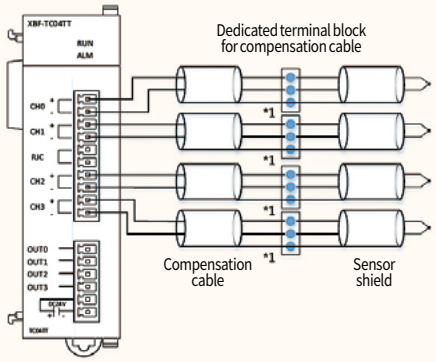

Performance specifications (XBF-TC04RT)



Item	Performance Specifications					
Control loop	4 loop					
RTD type and input range	RTD	Pt100	-200.0 to 850.0°C (-328.0°F to 1562.0°F)			
		JPt100	-200.0 to 600.0°C (-328.0°F to 1112.0°F)			
Precision	±0.2% (25°C) Temperature coefficient: ±100 ppm/°C (0.01%/°C)					
Sampling period	500 ms / 4 loops					
Control method	PID control, ON/OFF control					
Control parameter	Target value (SV)	Set within the range according to the input type (temperature unit setting)				
	Proportional gain	0: ON/OFF control	Set within the floating-point range (REAL, 0.000 to 10000.000)			
	Integral time	0: Integral control disabled				
	Derivative time	0: Derivative control disabled				
Output	Output points	4				
	Transistor output	Rated load voltage	DC 24V			
		Max. load current	0.1 A / output point			
		Max. voltage drop when ON	DC 1.2 V or less			
		Leakage current when OFF	0.1 mA or less			
		Response time	ON ⇒ OFF	1 ms or less		
			OFF ⇒ ON	1 ms or less		
		Control output cycle	0.5 to 120.0 s (setting resolution: 0.5 s)			
		Time proportional resolution	The greater of 10 ms or 0.05% of Full-Scale			
Insulation	Insulation item		Insulation method	Dielectric strength	Insulation resistance	
	Between input channels		Photo relay	400 V AC, 50/60 Hz 1 min, leakage current 10 mA or less	500 V DC, 10 MΩ or more	
	Input terminal–internal circuit		Photocoupler			
	Between output channels		Non-insulated			
	External power supply–output terminal					
Averaging function	0 to 99% (setting range)					
	0 to 99 times (setting range)					
Connection terminal	18-point terminal (1 × 12-point terminal, 1 × 6-point terminal)					
Occupied I/O points	Fixed type: 64 points					
Max. number of modules	XBC/XEC “U”	10				
	XBC/XEC “H”	10				
	XBC/XEC “SU”	7				
	XBM “S”	7				
Current consumption	Internal DC 5 V: 120 mA, External DC 24 V: 100 mA					
Power supply	5 V, DC 24 V					

Thermocouple wiring

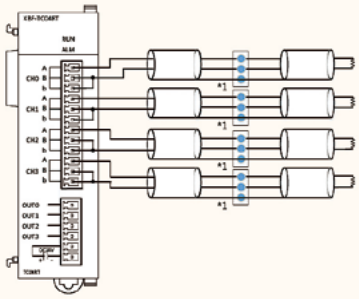

2-wire wiring

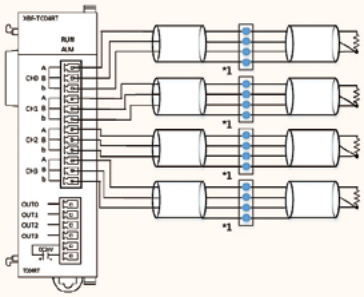

3-wire wiring

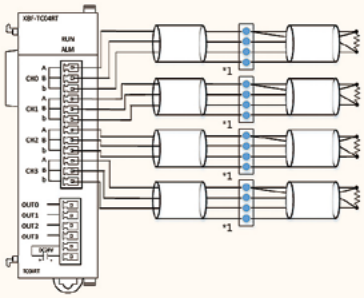

4-wire wiring

APPLICATION

Performance specifications (XBF-LD02S)



Item		Specifications			
Input channels		2 channels (insulation between channels)			
Load cell input voltage		5 VDC ±5% (up to eight 350 Ω load cells per channel)			
Load cell type		4-wire or 6-wire			
Resolution		1/40,000			
Load cell output sensitivity		1.0 mV/V to 6.0 mV/V			
Analog input range		0 to 30 mV			
Input accuracy		±0.01% or less (nonlinearity accuracy, 25°C) Zero drift: ±0.25 μV/°C, Gain drift: ±5 ppm/°C			
Sampling period (per channel)		10 ms			
Insulation		Classification	Insulation method	Dielectric strength (internal test specification)	Insulation resistance
		Input terminal–internal circuit	Isolator	AC 550 V, 50/60 Hz, 1 min Leakage current: 10 mA or less	DC 500 V, 10 MΩ or more
		Between input channels	Transformer		
		External power supply–internal circuit	DC/DC converter		
Connection terminal block		18-point terminal block (1 × 8-point terminal block, 1 × 10-point terminal block)			
Occupied I/O points		Fixed type: 64 points			
Max. number of modules		XBC/XEC “U”	10		
		XBC/XEC “H”	10		
		XBC/XEC “SU”	7		
		XBM “S”	7		
Power supply		DC 5 V (internal), DC 24 V (external)			
Current consumption	Internal (DC 5 V)	110 mA			
	External (DC 24 V)	280 mA			

Load cell wiring

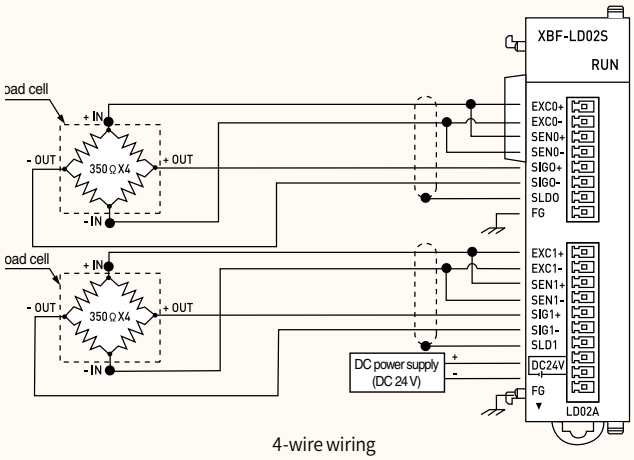

4-wire wiring

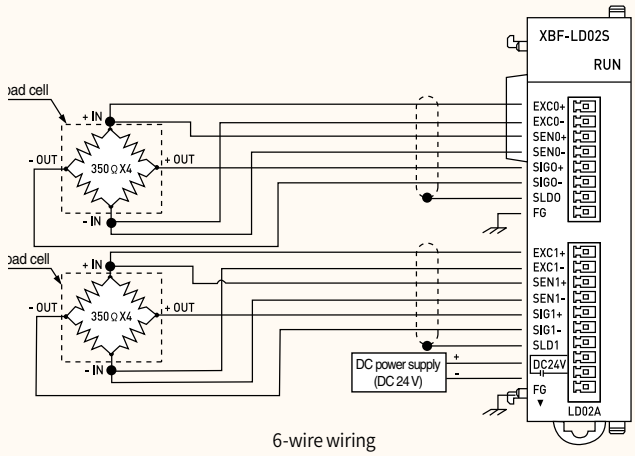

6-wire wiring

Part names and functions

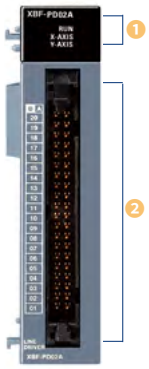

NO.	Name	Description
❶	Operation indicator LED	1. RUN: Indicates that power is supplied. 2. X_AXIS, Y_AXIS • Green: Operating • Red: Corresponding-axis error
❷	External wiring connector Note 1)	Connector for connecting the drive, sensor, manual pulse generator, etc.

* Note 1) The wiring connector is not provided. Please wire it using LS ELECTRIC Smart Link.

Performance specifications (XBF-PD02A)

Item		Specifications
No. of control axes		2 axes
Pulse output type		Line drive
Max. pulse output		2 Mpps
Max. connection length		10 m
Control method		Position control, speed control, speed/position switching, position/speed switching
Interpolation		Linear interpolation, circular interpolation
Positioning data		150 operation data for each axis (Set in the internal parameter or program of XG5000)
Configuration tool		XG5000 I/O parameter
Backup		Flash memory
Positioning	Coordinate system	Absolute / Incremental
	Unit	pulse
	Positioning range	-2,147,483,648 to 2,147,483,647
	Speed range	1 to 2,000,000 pulse/s
	Acceleration/deceleration type	Trapezoidal
	Acceleration/deceleration time	0 to 65,535 ms, asymmetric acceleration/deceleration
Max. encoder input		200 kpps (line drive)
Error / operation indication		Indicated by LED
Control I/O signals		Upper limit, lower limit, near-point, home, in-position, deviation counter clear
Occupied I/O points (XBC)		Fixed type: 64 points
Connection terminal		40-pin
Current consumption		500 mA

*Note 1) Supported versions: XBC O/S V1.8, XEC O/S V1.2, XBM O/S V3.0, XG5000 V3.1 or later.
*Note 2) For detailed operating instructions, refer to the XGB Positioning Module User's Manual.

Pin arrangement	Pin No. AX4	Pin No. AX1	Signal name	Description	Signal direction Positioning ↔ External	Operating condition
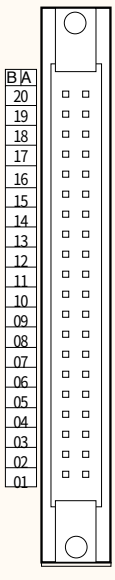	B20		MPG A+	Manual pulse generator / Encoder A+ input	←	
	A20		MPG A-	Manual pulse generator / Encoder A- input	←	
	B19		MPG B+	Manual pulse generator / Encoder B+ input	←	
	A19		MPG B-	Manual pulse generator / Encoder B- input	←	
	B18	A18	FP+	Forward pulse +	→	
	B17	A17	FP-	Forward pulse -	→	
	B16	A16	RP+	Reverse pulse +	→	
	B15	A15	RP-	Reverse pulse -	→	
	B14	A14	OV+	Upper limit	←	
	B13	A13	OV-	Lower limit	←	
	B12	A12	DOG	Near-point	←	
	B11	A11	NC	Not used	-	
	B10	A10				
	B9	A9	COM	Common terminal (OV+, OV-, DOG)	-	
	B8	A8	NC	Not used	-	
	B7	A7	INP	In-position signal	←	
	B6	A6	INP COM	Common terminal (INP)	-	
	B5	A5	CLR	Deviation counter clear	→	
	B4	A4	CLR COM	Common terminal (CLR)	-	
	B3	A3	HOME	Home signal (+5 V)	←	
	B2	A2	COM HOME	Common terminal (Home)	-	
	B1	A1	NC	Not used	-	

XBF-PD02A (Line Driver)

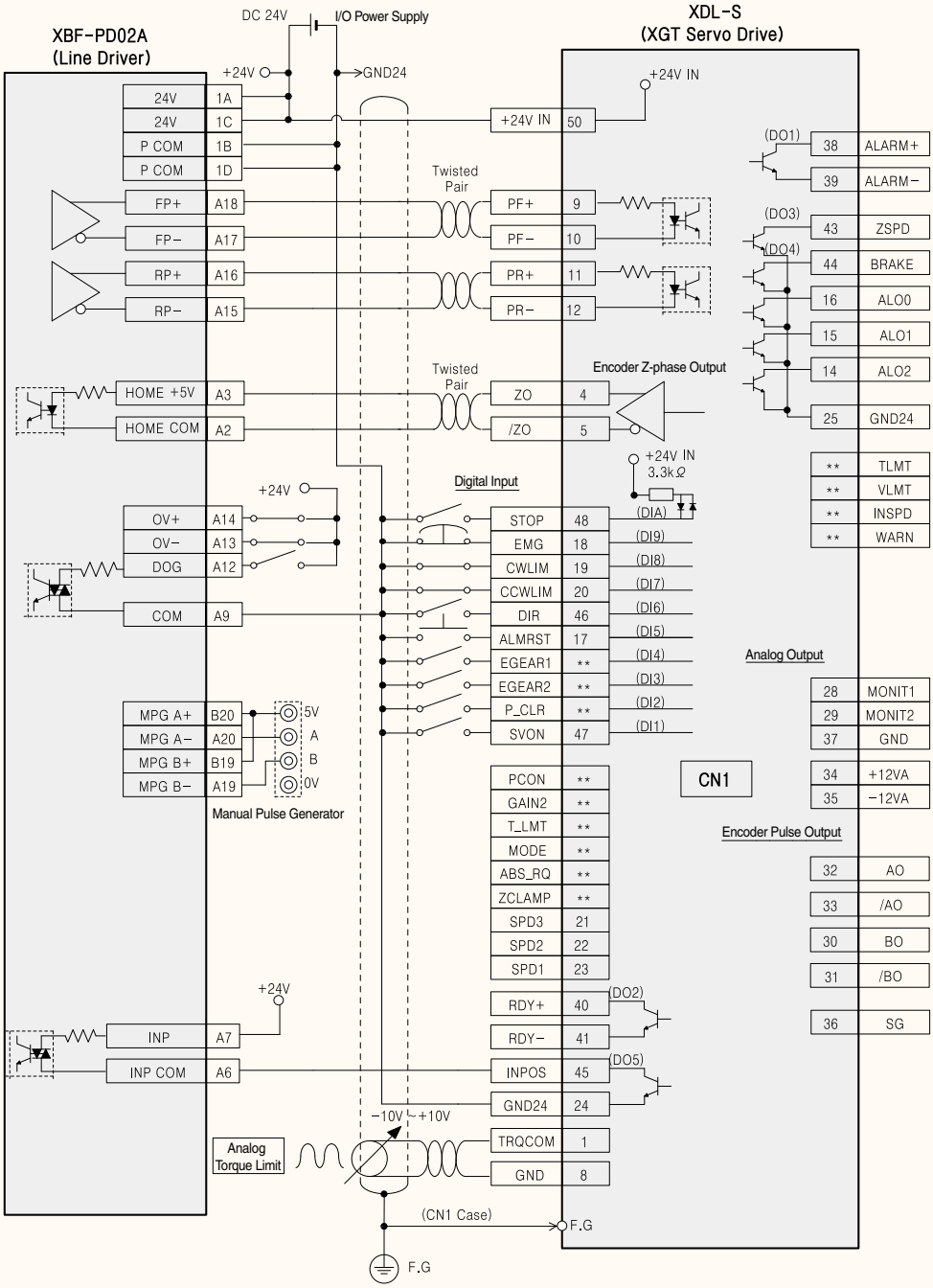

* This wiring diagram is an example based on Axis 1.
For Axis 2 wiring, refer to the pin arrangement of the positioning module.

XBM-DN**S (Open Collector)

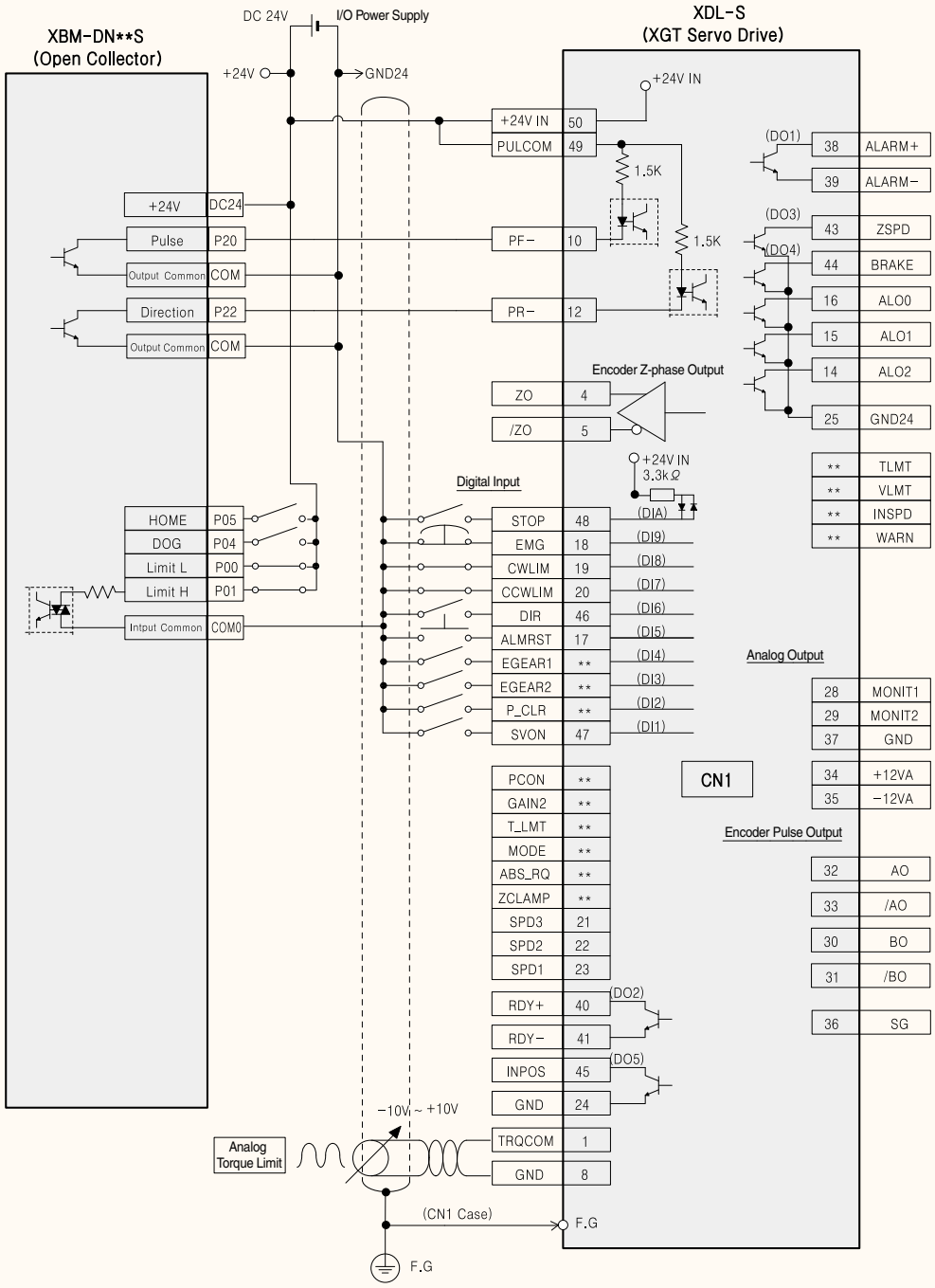

* This wiring diagram is an example based on Axis 1For Axis 2 wiring, refer to the pin arrangement of the positioning module.

XBC/XEC-DN**H (Open Collector)

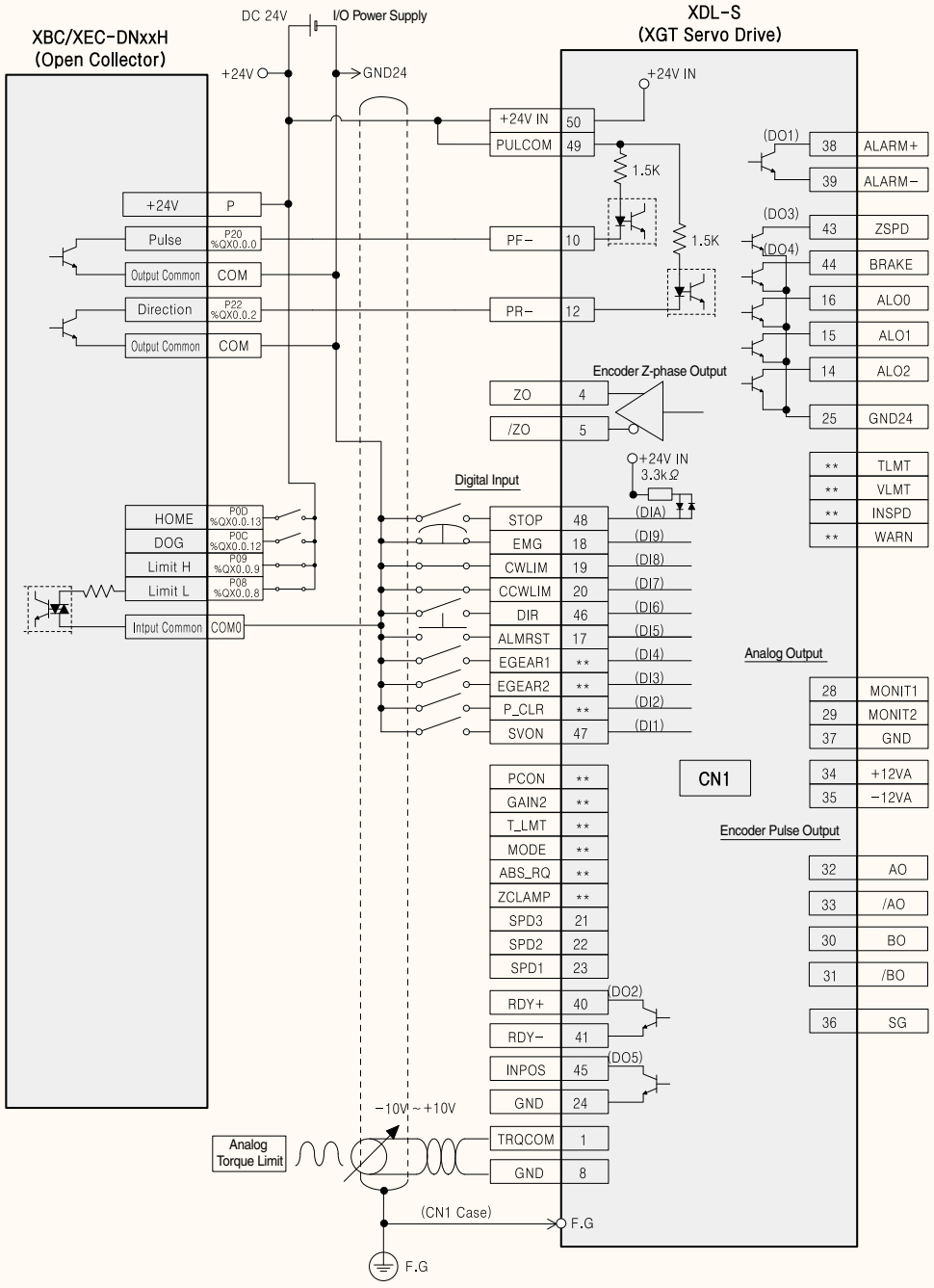

* This wiring diagram is an example based on Axis 1For Axis 2 wiring, refer to the pin arrangement of the positioning module.

Performance specifications (XBF-PN08B, XBF-PN04B)



Item		XBF-PN08B	XBF-PN04B
No. of control axes		8 axes	4 axes
Interpolation function		2–8 axes linear interpolation, 2 axes circular interpolation, 3 axes helical interpolation	
Control method		Position control, Speed control, Speed/Position control, Position/Speed control, Position/Torque control, Feed control	
Control unit		pulse, ㎜, inch, degree	
Positioning data		Each axis can have up to 400 operation data (Operation step number: 1–400) Available to set with XG-PM or program	
XG-PM	Connection	RS-232C port of CPU module or USB	
	Setting data	Common, Basic, Extended, Manual operation, Servo parameter, Operation data, Cam data, Command information	
	Monitor	Operation information, Trace, Input terminal information, Error information	
Back-up		Save parameters and operation data in MRAM (No battery required)	
Positioning	Positioning method	Absolute / Incremental	
	Position address range		Absolute / Incremental / Speed/Position switching control
		㎜	-214748364.8 to 214748364.7 (㎛) / -214748364.8 to 214748364.7 (㎛) / -214748364.8 to 214748364.7 (㎛)
		Inch	-21474.83648 to 21474.83647 / -21474.83648 to 21474.83647 / -21474.83648 to 21474.83647
		degree	-21474.83648 to 21474.83647 / -21474.83648 to 21474.83647 / -21474.83648 to 21474.83647
		pulse	-2147483648 to 2147483647 / -2147483648 to 2147483647 / -2147483648 to 2147483647
	Speed range	㎜	0.01 to 20000000.00 mm/min
		Inch	0.001 to 2000000.000 inch/min
		degree	0.001 to 2000000.000 degree/min
		pulse	1 to 20,000,000 pulse/sec
		rpm	0.1 to 100000.0 RPM
	Acc./Dec. process	Trapezoid type, S-type	
	Acc./Dec. time	1 to 2,147,483,647 ms Selectable from 4 acceleration patterns and 4 deceleration patterns	
Manual Operation		Jog Operation / MPG Operation / Inching Operation	
Homing method		Refer to the method supported by the servo driver	
Speed change function		Speed change (Absolute/Percent)	
Torque unit		Rated torque % designation	
Absolute position system			
External Encoder input	Channel	1 channel	
	Max. Input	Max. 200 kpps	
	Input form	Line drive input (RS-422A IEC specification), open collector output type encoder connectable (5 V, 24 V)	
	Input type	CW/CCW, Pulse/Dir, Phase A/B	
	Connection connector	9-point connector	
Communication Period		1 ms	
Max. transmission distance		100 m	
Communication cable		CAT.5 or higher STP (Shielded Twisted-pair) cable	
Error indication		Indicated by LED	
Communication status indication		Indicated by LED	
Occupied I/O points		Variable type: 16 points, Fixed type: 64 points	
Current consumption		510 mA	
Weight		115 g	

XBF-PN08B (EtherCAT)

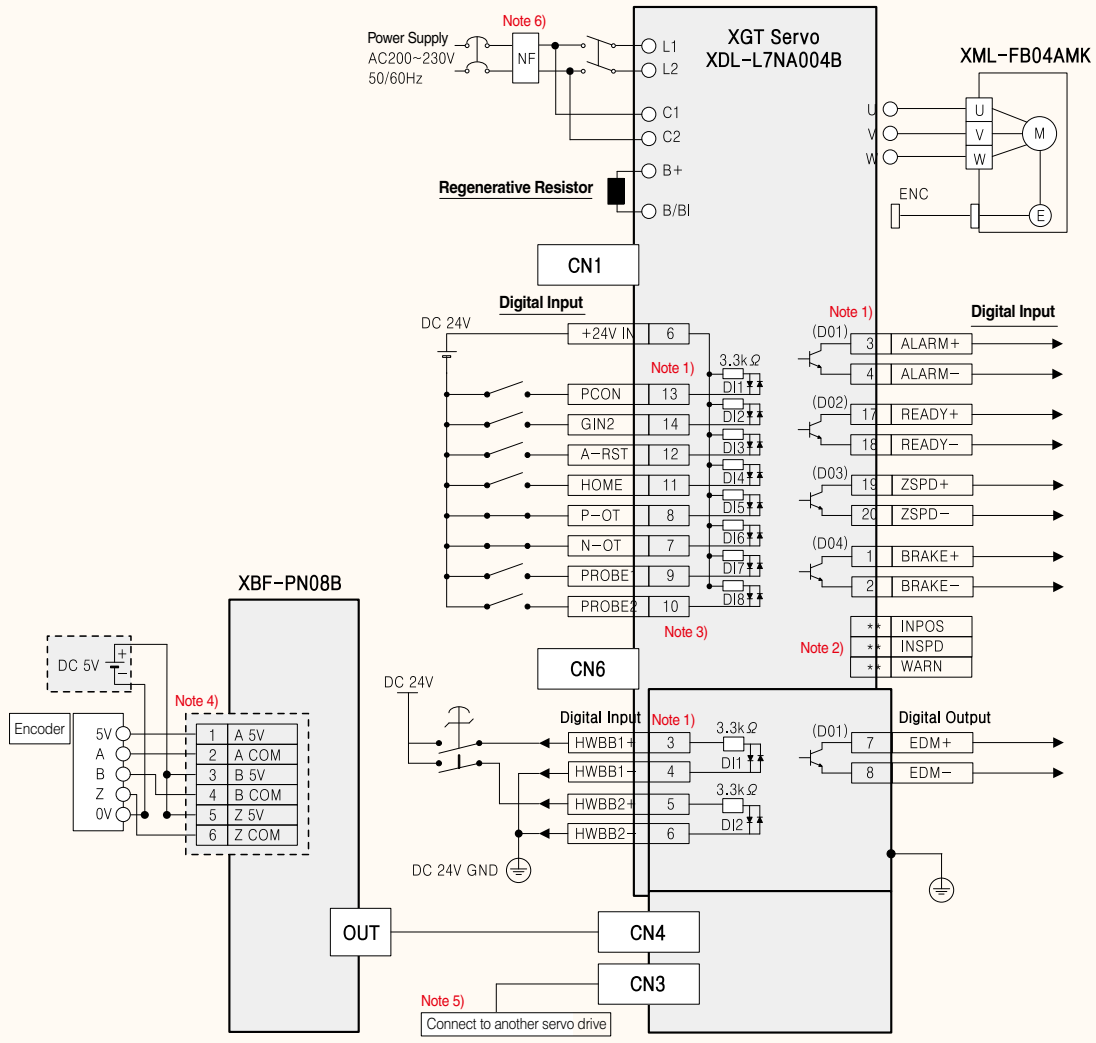

Note 1) Input signals DI1 to DI8 and output signals DO1 to DO4 are the default signals assigned at factory shipment
Note 2) These are unassigned signals. The assigned output signals can be changed through the output signal assignment setting. For details, refer to the servo drive user manual
Note 3) When using inputs D17 and D18, be sure to assign the corresponding input signals to PROBE1 and PROBE2, respectively
Note 4) The encoder wiring example is for a 5 V voltage-output (open-collector) type
Note 5) When connecting two or more servo drives, connect OUT of the first servo drive to IN of the next positioning module, and then connect the remaining servo drives in sequence by connecting OUT of the preceding servo drive to IN of the next servo drive. The OUT terminal of the last servo drive does not need to be connected. The connection order is not critical
Note 6) Be sure to use an NF (Noise Filter) to prevent noise interference from external sources.

Performance specifications (XBF-HO02A, HD02A)

Item		Performance Specifications	
		XBF-HO02A	XBF-HD02A
Number of channels		2 channels	
Pulse input	Signal	A-phase, B-phase	
	Method	Open collector (voltage)	Line driver (4-wire)
	Level	DC 5/12/24 V (selectable by terminal)	RS-422A line driver (5 V level) / HTL line driver (24 V level)
Max. count speed		200 kpps	500 kpps (HTL input: 250 kpps)
Count range		-2,147,483,648 to 2,147,483,647	
Count type		Linear count (when the range is exceeded, carry or borrow occurs and counting stops) Ring count (repeated counting within the configured range)	
Input pulse type	1-phase input	1-phase input	
	2-phase input	2-phase input	
	CW/CCW	CW/CCW input	
Up/Down count setting	1-phase input	Up/down counting by B-phase input,	
	2-phase input	or up/down counting set by program	
	CW/CCW	Automatic up/down counting by phase difference	
Multiplier setting	1-phase input	A-phase input: up count, B-phase input: down count	
	2-phase input	1x, 2x, 4x	
	CW/CCW	1x	
Control input	Signal	Preset, Auxiliary function (Gate)	
	Level	DC 5/12/24 V (selectable by terminal)	
	Type	Voltage	
Comparison output	Points	2 points / channel	
	Type	Single comparison (>, ≥, =, ≤, <) or section comparison (≤ ≤, ≥ ≥, ≥ ≤)	
	Form	Open collector (sink type)	
Operation status display	Input signal	A-phase, B-phase, Preset, Auxiliary function	
	Output signal	Comparison output 0, Comparison output 1	
	Operating status	Module LED	
Count enable		Set by program (counts only in enabled state)	
Preset function		Set by terminal or program	
Auxiliary function (specified by internal/ external input)		Count clear, Count latch, Measurement of input frequency (measured for each input mode) Counts per hour (time setting range: 0–60,000 ms), Rotation count measurement Section (time setting range: 0–60,000 ms), Count prohibited	
Connection terminal		40-pin connector	
Occupied I/O points		Fixed type: 64 points	
Internal current consumption		200 mA	260 mA
Weight		90 g	

Connector pin assignment

XBF-HO02A

Pin Arrangement	B	A	Signal Name	
	CH1	CH0		
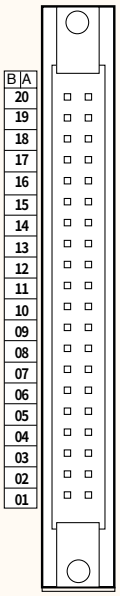	B20	A20	A24V	A-phase Pulse Input 24V
	B19	A19	A12V	A-phase Pulse Input 12V
	B18	A18	A5V	A-phase Pulse Input 5V
	B17	A17	ACOM	A-phase Pulse Input Common
	B16	A16	B24V	B-phase Pulse Input 24V
	B15	A15	B12V	B-phase Pulse Input 12V
	B14	A14	B5V	B-phase Pulse Input 5V
	B13	A13	BCOM	B-phase Pulse Input Common
	B12	A12	P24V	Preset Input 24V
	B11	A11	P12V	Preset Input 12V
	B10	A10	P5V	Preset Input 5V
	B09	A09	PCOM	Preset Input Common
	B08	A08	G24V	Auxiliary Function Input 24V
	B07	A07	G12V	Auxiliary Function Input 12V
	B06	A06	G5V	Auxiliary Function Input 5V
	B05	A05	GCOM	Auxiliary Function Common
	B04	A04	OUT0	Comparison Output 0
	B03	A03	OUT1	Comparison Output 1
	B02	A02	24V	External Power Input 24V
	B01	A01	24G	External Power Input GND

XBF-HD02A

Pin Arrangement	B	A	Signal Name	
	CH1	CH0		
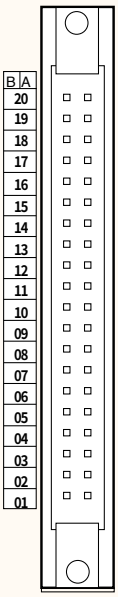	B20	A20	AI+	A-phase Differential Input +
	B19	A19	AI-	A-phase Differential Input -
	B18	A18	AII+	A-phase Differential Input +
	B17	A17	AII-	A-phase Differential Input -
	B16	A16	BI+	B-phase Differential Input +
	B15	A15	BI-	B-phase Differential Input -
	B14	A14	BII+	B-phase Differential Input +
	B13	A13	BII-	B-phase Differential Input -
	B12	A12	P24V	Preset Input 24V
	B11	A11	P12V	Preset Input 12V
	B10	A10	P5V	Preset Input 5V
	B09	A09	PCOM	Preset Input Common
	B08	A08	G24V	Auxiliary Function Input 24V
	B07	A07	G12V	Auxiliary Function Input 12V
	B06	A06	G5V	Auxiliary Function Input 5V
	B05	A05	GCOM	Auxiliary Function Common
	B04	A04	OUT0	Comparison Output 0
	B03	A03	OUT1	Comparison Output 1
	B02	A02	24V	External Power Input 24V
	B01	A01	24G	External Power Input GND

Option module

Various option modules can be installed, enabling functional expansion and cost reduction.

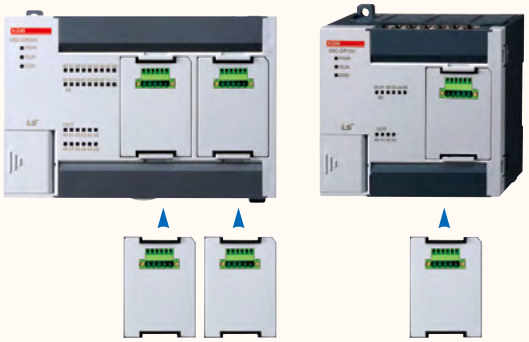

Up to 2 modules can be installed　　Up to 1 module can be installed

Part names

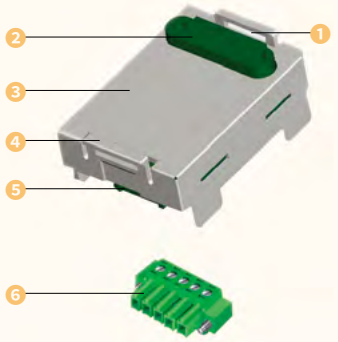

NO.	Name	Description
1 4	Mounting Hook	Mounting hooks for attaching the option module to the base unit
2	Terminal Block	Wiring terminal block for connection to external devices (analog input)
3	Cover	Option module cover
5	Option Module Connector	Connector for connecting the option module to the base unit
6	I/O Connector	Wiring connector for connection to external devices

Base Unit / Software	Version Information
XBC/XEC “E” type	V1.1 or later
XGB “SU” type	V1.0 or later
XG5000	V3.61 or later

*Note 1) The analog input option module requires the main unit versions listed in the table below or later.

RTC option module

Since the RTC (clock) function is not built into the Economic type (XBC/XEC-DxxxE) and Standard type (XBC/XEC-DxxxSU), installing the RTC option module enables time management for the system and fault history. The RTC continues clock operation even when the power is OFF or during a momentary power failure. The current RTC time is updated every scan through the system operating-status information flag.

* Can be installed only in Slot 9

Part names

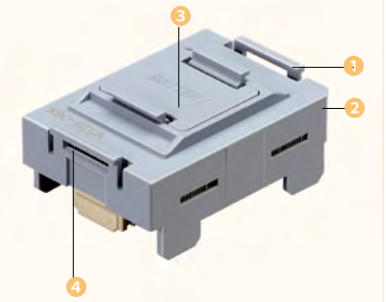

NO.	Name	Description
1 4	Mounting Hook	Mounting hooks for attaching the option module to the base unit
2	Option Module Cover	Option module cover
3	Battery Cover	Battery cover

Special relay area; monitorable in program

Special Relay Area	Data	Description
F053	H0710	Year 10 / Month 07
F054	h1729	Day 29 / Hour 17
F055	H1020	Hour 10 / Minute 20
F056	H2004	Year 2000 / Thursday

Modifying clock data by program

Area	Stored Information
M0000	Month / Year
M0001	Hour / Day
M0002	Second / Minute
M0003	Year / Day of Week

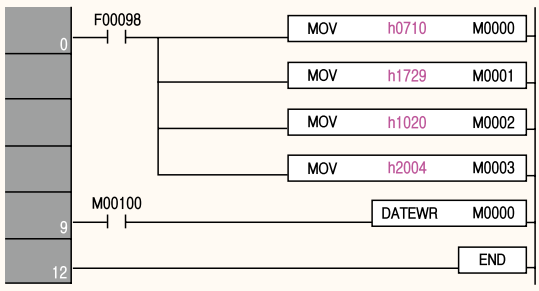

APPLICATION

Digital input module (Built-in High-Speed Counter Function)



Circuit configuration

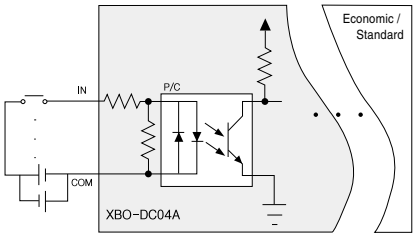

Item		DC Input Specifications	
		XBO-DC04A	Remarks
Input points		4 points (high-speed counter function available when installed in Standard type)	
Insulation method		Photocoupler insulation	
Rated input voltage		DC 24 V	
Rated input current		Approx. 10 mA	
Operating voltage range		DC 20.4 to 28.8 V (ripple: 5% or less)	
ON voltage / ON current		DC 19 V or higher / 3 mA or higher	
OFF voltage / OFF current		DC 6 V or lower / 1 mA or lower	
Input resistance		Approx. 2.7 kΩ	
Response time	Off → On	1/3/5/10/20/70/100 ms (Set in I/O parameters, default: 3 ms)	
	On → Off		
Common wiring		4 points / COM	
High-speed counter	High-speed counter performance	4 kpps, 4 channels (based on 1-phase input)	When installed in Standard type
	Counter mode	Linear count	

High-speed counter function of digital input module

The XGB input option module has a built-in high-speed counter function.

Item		Specifications
		XBO-DC04A
Counter input signal	Signal	A-phase, B-phase
	Input type	Voltage input (open collector)
	Signal level	DC 24 V
Max. counting speed		4 kpps
Number of channels	1-phase	4 kpps, 4 channels
	2-phase	2 kpps, 2 channels
Counting range		Signed 32 Bit (-2,147,483,648 to 2,147,483,647)
Count type (program setting)		Linear count (Carry/Borrow occurs when the 32-bit range is exceeded)
Input mode(program setting)		1-phase input / 2-phase input
Signal type		Voltage
Up/Down setting	1-phase input	Up/Down operation determined by B-phase input
		Up/Down operation determined by program
	2-phase input	Automatically determined by phase difference
Multiplication function	1-phase input	×1
	2-phase input	×2
Count Enable		Set by program (Counts only while Enable is active)
Preset function		Set by program

Counter input specifications

Item	Specifications
Input voltage	DC 24 V (20.4 to 28.8 V)
Input current	10 mA
Guaranteed ON voltage (min.)	20.4 V
Guaranteed OFF voltage (max.)	6 V

I/O signals

Terminal No.	Specifications	
	1-phase	2-phase
00	Ch0 counter input	Ch0 A-phase input
01	Ch1 counter input	Ch0 B-phase input
02	Ch2 counter input	Ch2 A-phase input
03	Ch3 counter input	Ch2 B-phase input
COM	Input common	Input common

Terminal No.	Purpose	
	1-phase	2-phase
00	Counter input terminal	A-phase input terminal
01	Counter input terminal	B-phase input terminal
02	Counter input terminal	A-phase input terminal
03	Counter input terminal	B-phase input terminal
COM	Common terminal	Common terminal

Transistor Output Option module (Built-in Positioning Function)



Circuit configuration

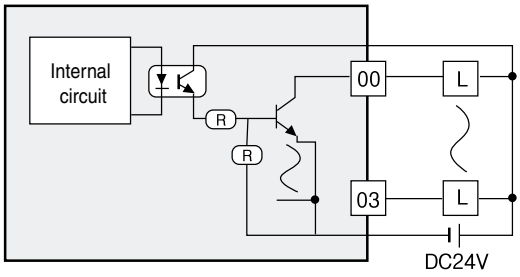

Item		DC Output Specifications	
		XBO-TN04A	Remarks
Output points		4 points (pulse output function available when installed in Standard type)	
Insulation method		Photocoupler insulation	
Rated load voltage		DC 24 V	
Max. load current		0.5 A/point, 2 A/COM	
Surge suppressor		Zener diode	
Leakage current at OFF		0.1 mA or less	
Voltage drop at ON		DC 1 V or less	
Inrush current		3 A, 10 ms or less	
Response time	Off → On	1 ms or less	
	On → Off	1 ms or less	
Operation indication		-	
Pulse output	No. of control axes	2 axes	When installed in Slot 9 of Standard type
	Output type	Open collector	
	Control unit	Pulse	
	Control speed	10 kpps (only one option module supported)	
	Setting method	Set using the DST instruction	

Circuit configuration

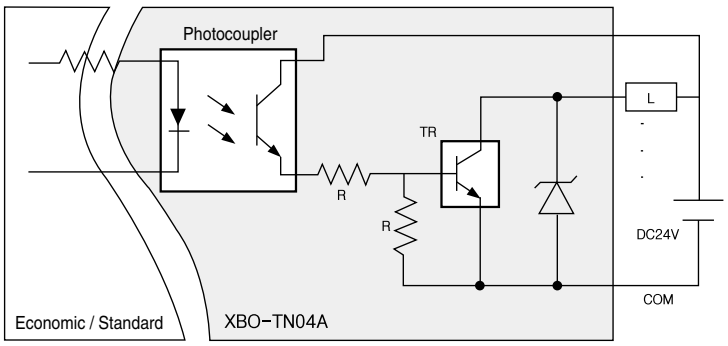

APPLICATION

Positioning function of transistor output (XBO-TN04A)

The XGB output option module has a built-in positioning function.

Item \ Function		Specifications
No. of control axes		2 axes
Control method		Position control, Speed control
Control unit		Pulse
Positioning	Positioning method	Incremental / Absolute
	Address range	-2,147,483,648 to 2,147,483,647 pulses
	Speed range	1 to 10,000 pps (1 pps unit)
Manual operation		Jog operation
Positioning method		Proximity method
Max. connection distance		2 m
Connection connector		6-pin connector

Positioning signals

Terminal No.	Output Point No.		Operation	Output Logic
Pulse output	X-axis	00	X-axis pulse output point for positioning	High Active
	Y-axis	01	Y-axis pulse output point for positioning	
Direction output	X-axis	02	X-axis direction output point for positioning	
	Y-axis	03	Y-axis direction output point for positioning	
External power supply	X/Y-axis	DC24 V	Terminal for supplying external power to drive the transistor	
Output common	X/Y-axis	COM	Output common terminal	

Output pulse level

Pulse Output Method	Output Signal	Output Signal Level	
		Forward	Reverse
Pulse + Direction Mode	Pulse	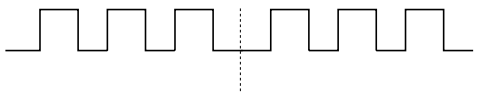	
	Direction	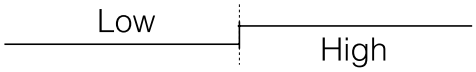	

XBO-AD02A

Item			Performance Specifications	
Number of channels			2 channels	
Analog input range	Type		Voltage	Current
	Range		DC 0 to 10 V (Input resistance: 1 MΩ or more)	DC 4 to 20 m ADC 0 to 20 mA (Input resistance: 250 Ω)
			The input range for each channel is set by the user program or I/O parameter.	
Digital output	Data format		12-bit binary data	
	Range	Unsigned value	0 to 4,000	
		Signed value	-2,000 to 2,000	
		Precise value	0 to 1,000 (DC 0 to 10 V)	400 to 2,000 (DC 4 to 20 mA) 0 to 2,000 (DC 0 to 20 mA)
		Percentile value	0 to 1,000	
Max. resolution			1/4,000 (DC 4 to 20 mA: 1/3,200)	
			2.5 mV (DC 0 to 10 V)	5 µA (DC 0 to 20 mA) 6.25 µA (DC 4 to 20 mA)
Accuracy			±1.0% or less	
Max. conversion speed			1 ms/channel + scan time	
Max. absolute input			DC +12 V / -10 V	DC ±25 mA
Additional functions	Averaging function		Count average (2 to 64,000 times)	
	Gain adjustment range		Gain adjustment (-40 to 40)	
Insulation method			No insulation between analog input channels / Photocoupler insulation between input terminal and PLC power	
Input terminal			5-point terminal block	
Occupied I/O points			Fixed type: 64 points	
Max. number of modules			1 module (when using XBC/XEC-DR10E/DR14E “E” type)	
			2 modules (when using XBC/XEC-DR20E/DR30E “E” type) 2 modules (when using XBC/XEC-DxxxS/SU type)	
Power supply			Internal DC 5 V	
Current consumption			50 mA	
Weight			20 g	

Analog-to-digital conversion characteristics

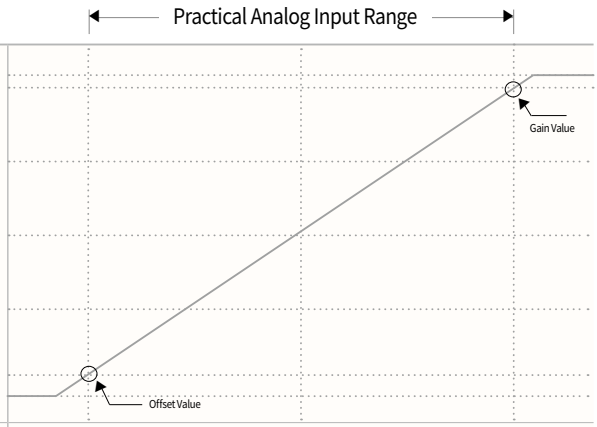

Digital Output Value	1011 1000	2047 2000	4047 4000			
	750	1000	3000			
	500	0	2000			
	250	-1000	1000			
	0 -12	-2000 -2048	0 -48			
Analog Input Value	DC 4–20 mA			4 mA	12 mA	20 mA
	DC 0–20 mA			0 mA	10 mA	20 mA
	DC 0–10 V			0 V	5 V	10 V

XBO-DA02A

Item			Performance Specifications	
Number of output channels			2 channels	
Analog output range	Type		Voltage	Current
	Range		DC 0 to 10 V (Load resistance: 2 kΩ or more)	DC 4 to 20 mA DC 0 to 20 mA (Load resistance: 450 Ω)
			The output range for each channel is set by the user program or I/O parameter.	
Digital input	Data format		12-bit binary data	
	Range	Unsigned value	0 to 4,000	
		Signed value	-2,000 to 2,000	
		Precise value	0 to 1,000 (DC 0 to 10 V)	400 to 2,000 (DC 4 to 20 mA) 0 to 2,000 (DC 0 to 20 mA)
		Percentile value	0 to 1,000	
Max. resolution			1/4,000 (DC 4 to 20 mA: 1/3,200)	
			2.5 mV (DC 0 to 10 V)	5 µA (DC 0 to 20 mA) 6.25 µA (DC 4 to 20 mA)
Accuracy			±1.0% or less	
Max. conversion speed			1 ms/channel + scan time	
Additional functions			Channel output status setting (previous, minimum, midpoint, maximum selectable output), gain adjustment function	
Insulation method			No insulation between analog output channels / No insulation between output terminal and PLC main unit	
Output terminal			5-point terminal block	
Power supply			Internal 5 V	
Occupied I/O points			Fixed type: 64 points	
Current consumption	Internal (DC 5 V)		150 mA	
Weight			20 g	

Analog-to-digital conversion characteristics

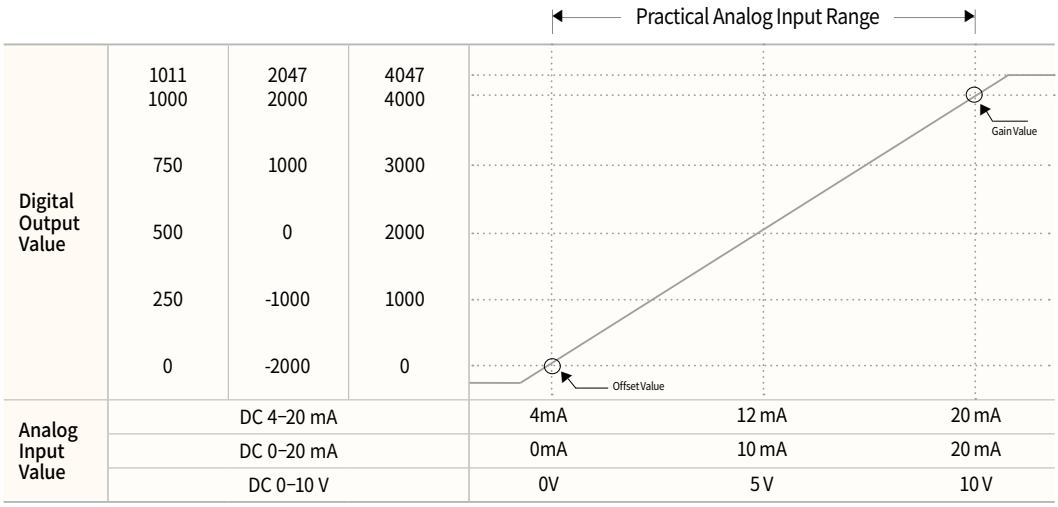

Digital Output Value	1011 1000	2047 2000	4047 4000			
	750	1000	3000			
	500	0	2000			
	250	-1000	1000			
	0	-2000	0			
Analog Input Value	DC 4–20 mA			4mA	12 mA	20 mA
	DC 0–20 mA			0mA	10 mA	20 mA
	DC 0–10 V			0V	5 V	10 V

XBO-AH02A

Item			Input Performance Specifications	
Number of channels			1 channel	
Analog output range	Type		Voltage	Current
	Range		DC 0 to 10 V (Input resistance: 1 MΩ or more)	DC 4 to 20 mA DC 0 to 20 mA (Input resistance: 250 Ω)
			The input range for each channel is set by the user program or I/O parameter.	
Digital input	Data format		12-bit binary data	
	Range	Unsigned value	0 to 4,000	
		Signed value	-2,000 to 2,000	
		Precise value	0 to 1,000 (DC 0 to 10 V)	400 to 2,000 (DC 4 to 20 mA) 0 to 2,000 (DC 0 to 20 mA)
		Percentile value	0 to 1,000	
Resolution			1/4,000 (DC 4 to 20 mA: 1/3,200)	
			2.5 mV (DC 0 to 10 V)	5 μA (DC 0 to 20 mA) 6.25 μA (DC 4 to 20 mA)
Accuracy			±1.0% or less	
Max. conversion speed			1 ms/channel + scan time	
Max. absolute input			DC +12 V / -10 V	DC ±25 mA
Additional functions	Averaging function		Count average (2 to 64,000 times)	
	Gain adjustment function		Gain adjustment (-40 to 40)	

Item			Output Performance Specifications	
Number of output channels			1 channel	
Analog output range	Type		Voltage	Current
	Range		DC 0 to 10 V (Load resistance: 2 kΩ or more)	DC 4 to 20 mA DC 0 to 20 mA (Load resistance: 450 Ω)
			The output range for each channel is set by the user program or I/O parameter.	
Digital input	Data format		12-bit binary data	
	Range	Unsigned value	0 to 4,000	
		Signed value	-2,000 to 2,000	
		Precise value	0 to 1,000 (DC 0 to 10 V)	400 to 2,000 (DC 4 to 20 mA) 0 to 2,000 (DC 0 to 20 mA)
		Percentile value	0 to 1,000	
Max. resolution			1/4,000 (DC 4 to 20 mA: 1/3,200)	
			2.5 mV (DC 0 to 10 V)	5 μA (DC 0 to 20 mA) 6.25 μA (DC 4 to 20 mA)
Accuracy			±1.0% or less	
Max. conversion speed			1 ms/channel + scan time	
Additional functions			Channel output status setting (previous, minimum, midpoint, maximum selectable output), gain adjustment function	

Item		Common I/O Performance Specifications
Insulation method		No insulation between analog I/O channels No insulation between I/O terminal and PLC main unit
I/O terminal		Plug-in terminal block
Occupied I/O points		Fixed type: 64 points
Max. number of modules		1 module (when using XBC/XEC-DR10E/DR14E “E” type) 2 modules (when using XBC/XEC-DR20E/DR30E “E” type) 2 modules (when using XBC/XEC-DxxxS/SU “S” type)
Current consumption	Internal (DC 5 V)	150 mA
Weight		20 g

Input characteristics

Digital Output Value	1011 1000	2047 2000	4047 4000		
	750	1000	3000		
	500	0	2000		
	250	-1000	1000		
	0 -12	-2000 -2048	0 -48		
Analog Input Value	DC 4–20 mA			4mA	12mA	20mA
	DC 0–20 mA			0mA	10mA	20mA
	DC 0–10 V			0V	5V	10V

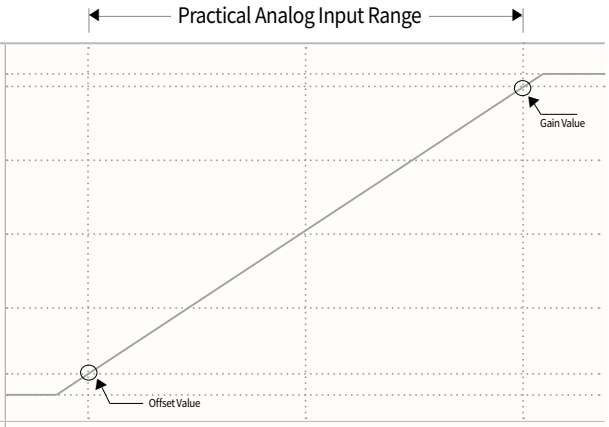

Output characteristics

Digital Output Value	1011 1000	2047 2000	4047 4000		
	750	1000	3000		
	500	0	2000		
	250	-1000	1000		
	0	-2000	0		
Analog Input Value	DC 4–20 mA			4mA	12mA	20mA
	DC 0–20 mA			0mA	10mA	20mA
	DC 0–10 V			0V	5V	10V

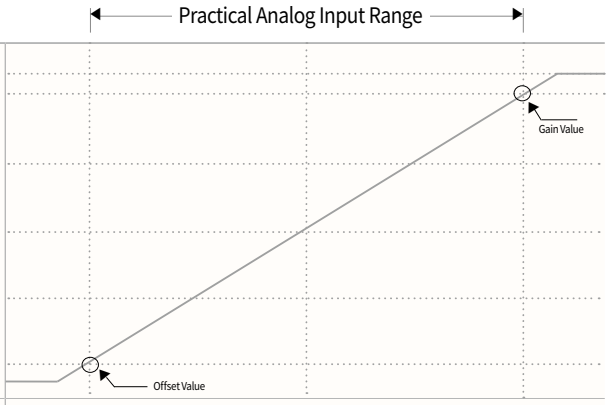

*Note 1) A Dead Band exists around the 0 V voltage output and 0 mA current output regions.
(a) Digital input reference: 0 to 10 range
(b) Analog output reference: Voltage (approx. 0 to 25 mV), Current (approx. 0 to 50 μA)
*Note 2) Within the Dead Band region, the digital input value and analog output value may not match. (Within the accuracy range.)

XBO-RD01A

Item		Performance Specifications
		XBO-RD01A
Number of input channels		1 channel
Input sensor type	PT100	JIS C1604-1997
	JPT100	JIS C1604-1981, KS C1603-1991
Input temperature range	PT100	-200 to 600°C
	JPT100	-200 to 600°C
Digital output	PT100	-2,000 to 6,000
	JPT100	-2,000 to 6,000
Accuracy		±1.0% or less
Conversion speed		25 ms / channel
Insulation method		No insulation between input terminal and PLC main unit
Terminal block		5-point terminal block
Occupied I/O points		Fixed type: 64 points
Max. number of modules		1 module (when using XBC/XEC-DR10E/DR14E “E” type) 2 modules (when using XBC/XEC-DR20E/DR30E “E” type), XBCS(U)
Sensor wiring method		3-wire
Additional functions	Averaging function	Count averaging function
	Alarm function	Disconnection detection
Current consumption	Internal DC 5 V	30 mA
Weight		20 g

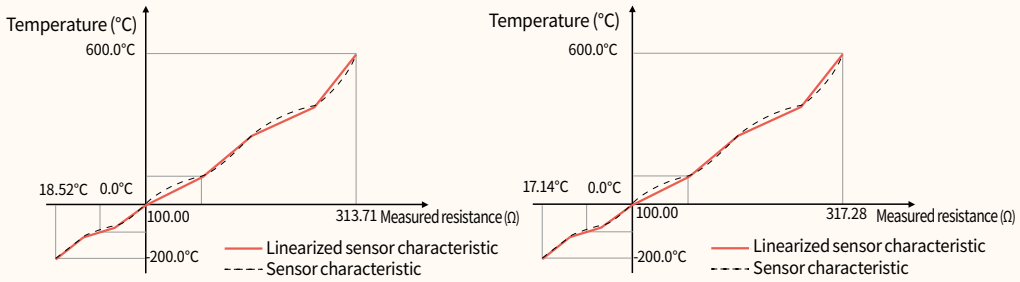

Thermocouple characteristics

The resistance-temperature characteristics of an RTD sensor are provided in tabular form.
The PT100 (JIS C1604-1997) characteristic table shows the sensor resistance corresponding to each temperature and the change in resistance for each 1°C change in temperature.
The resistance does not increase by a constant amount for every 1°C change; instead, the amount of change varies depending on the temperature range.
This is referred to as a nonlinear characteristic.

XBO-TC02A

Item		Specifications
Number of input channels		2 channels
Input sensor type		Thermocouple K / J (JIS C1602-1995)
Temperature measurement range	K-type sensor	-200.0°C to 1300.0°C
	J-type sensor	-200.0°C to 1200.0°C
Digital output	Temperature display unit (°C)	16-bit binary data, displayed to one decimal place (K, J: 0.1°C)
Accuracy		±1.0% or less
Conversion speed		50 ms / 2 channels *Note 1)
Reference junction compensation	Automatic compensation by RJC sensor (thermistor)	
	Compensation accuracy	±1.0°C
Additional functions	Additional processing function	Count averaging function
	Alarm function	Input disconnection detection
Warming-up time		15 minutes or more *Note 2)
Insulation method		No insulation between input channels / No insulation between input terminal and PLC main unit
I/O terminal		5-point terminal block
Power supply		Internal 5 V
Occupied I/O points		Fixed type: 64 points
Current consumption		50 mA
Weight		20 g

*Note 1) A channel scan delay may occur depending on the scan time of the XGB main unit.
*Note 2) After power is turned on, a warming-up time of at least 15 minutes is required to stabilize the measured temperature.

Temperature conversion characteristics

1) K (JIS C1602-1995):
-200°C(-5891 μV) to 1300°C (52410 μV)

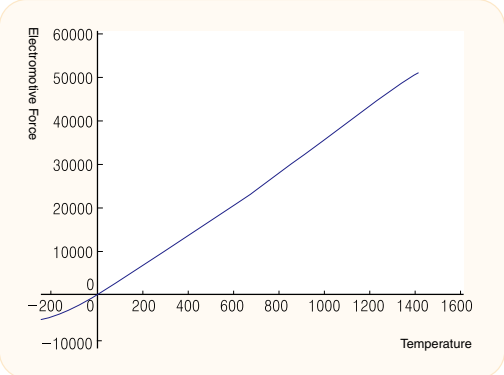

1) J (JIS C1602-1995):
-200°C(-7890μV) to 1200°C (69553 μV)

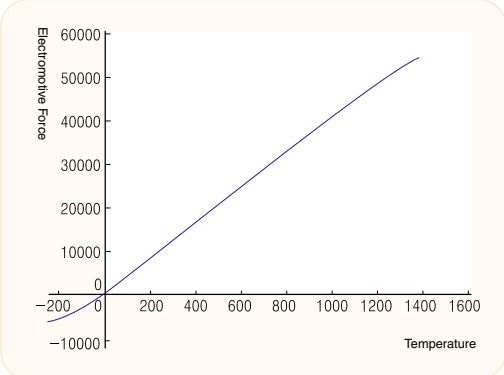

Thermocouple Type	Measurement Temperature Range	Displayed Temperature Range	Accuracy *Note 1)	Resolution
K	-200.0°C to 1300.0°C	-200.0°C to 0.0°C	±15.0°C	0.2°C
		0.0°C to 1300.0°C		0.1°C
J	-200.0°C to 1200.0°C	-200.0°C to -100.0°C	±14.0°C	0.2°C
		-100.0°C to 1200.0°C		0.1°C

Thermocouple characteristics

A thermocouple is a sensor made by joining two different metals.
When the temperature at the junction changes, a corresponding microvoltage (thermoelectric electromotive force) is generated, and this is used to measure temperature.
Thermocouple temperature-to-EMF specifications generally provide the measured electromotive force when the sensor measurement point is at 0°C.
Therefore, when measuring temperature with a thermocouple, cold-junction compensation (reference-junction compensation, RJC) is performed. (Built-in function of the thermocouple input module)

Cnet features

- Up to two modules can be installed on one main unit, allowing up to five channels to be used, including the loader port.
- Up to 32 stations can be connected, and XG5000 can access the system through the network.
- Communication programs can be easily created using various protocol editing and communication parameter settings in XG5000.
- Various communication speeds can be selected (1,200 to 115,200 bps).
- Long-distance communication systems can be configured using a leased-line MODEM (expansion RS-232C communication module).
- Remote access over long distances is supported using a dial-up MODEM (expansion RS-232C communication module).
- Full-duplex and half-duplex communication are supported (expansion RS-422 communication module).
- P2P function: User-defined communication and XGT/Modbus-RTU/ASCII communication client functions.
- XGT dedicated and Modbus-RTU/ASCII drivers are provided for HMI connection.
- XG5000 provides various diagnostic functions (I/O information, CPU status, link status, and status by service), simultaneous monitoring of transmitted/received frames, and confirmation of frame-processing results.
- Communication service information can be checked, including dedicated service and P2P service information.

Communication system configuration using Cnet

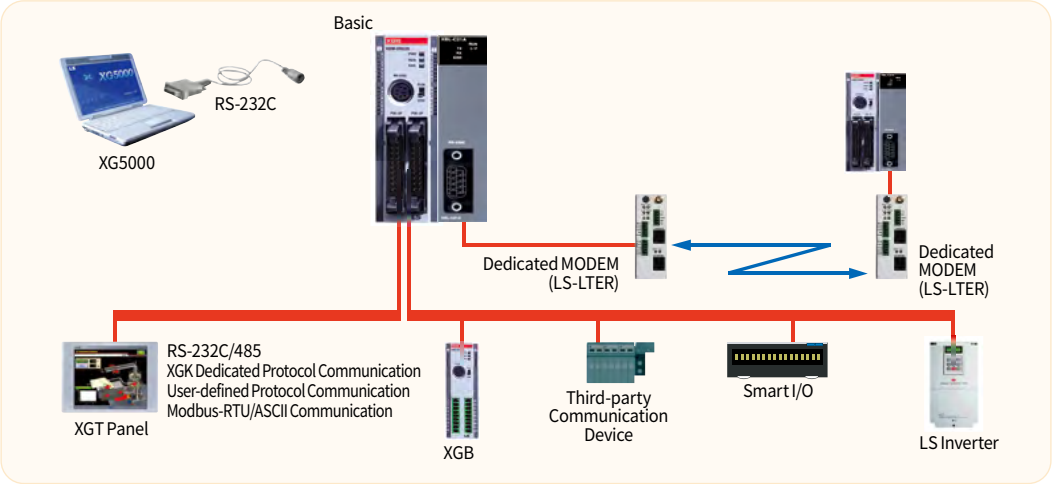

Performance specifications

Item		Specifications			
		Built-in RS-232C	XBL-C21A	Built-in RS-485	XBL-C41A
Interface		RS-232C, 1 channel	RS-232C, 1 channel	RS-485, 1 channel	RS-422/485, 1 channel
MODEM connection function		Long-distance communication with external devices via a public telephone network by connecting an external MODEM to the XBL-C21A module			
Communication mode	Dedicated mode	Supports 1:1 or 1:N communication using the dedicated protocol			
	XG5000 mode	Program download, upload, and remote control via remote access			
	P2P mode	Communication using a protocol created with XG5000 (interfaces with third-party devices available)			
Operation mode	Server (slave)	XGT/Modbus master communication			
	Master	Operates as an XGT/Modbus Server; remote access is available simultaneously; user-defined communication			
Data format	Start Bit	XGT/Modbus P2P client function; user-defined communication			
	Data Bit	7 or 8			
	Stop Bit	1 or 2			
	Parity	Even / Odd / None			
	Setting	Set as a basic parameter using XG5000			
Synchronization		Asynchronous			
Transmission speed (bps)		Selectable from 1,200 / 2,400 / 4,800 / 9,600 / 19,200 / 38,400 / 57,600 / 115,200 bps			
Station number setting		Set for each port using XG5000. Station numbers 0 to 31 can be set, up to 32 stations.			
Transmission distance		RS-232C: Max. 15 m (extendable when using a MODEM), RS-422: Max. 500 m			
MODEM communication			Supported	Not supported	Not supported
Network configuration		1:1	1:N		
iagnostic function *Note 1)		Can be checked using LEDs and the XG5000 diagnostic service			
Max. number of installation *Note 2)		Built into main unit	Max. 2 modules	Built into main unit	Max. 2 modules

*Note 1) The built-in RS-232C and RS-485 channels cannot be checked using the LED diagnostic service.
*Note 2) Up to two communication modules can be installed in total, including FEnet, Cnet, RAPIEnet, EtherNet/IP, etc.

Expansion Communication Modules >> Fast Ethernet

Fast Ethernet features

- Industrial high-speed Ethernet supporting 10/100BASE-TX (IEEE 802.3 compliant)
- Dedicated services for HMI connection (using XGT dedicated / Modbus TCP/IP protocols)
- Connection to upper-level LS ELECTRIC PLCs is supported through the high-speed link service (XGT/MASTER-K/GLOFA-GM).
- XG5000 remote service supports remote programming, remote monitoring, and PLC control.
- Network security can be implemented by restricting connections using the Host Table function.
- XG5000 enables simple network system configuration and comprehensive self-diagnostics/monitoring.
  - Module checking within the network (PING function).
  - Provides service-specific information (high-speed link, P2P, dedicated service, media status).
- Communication with third-party Ethernet devices is supported using user-protocol editing and P2P services.

Ethernet network system configuration

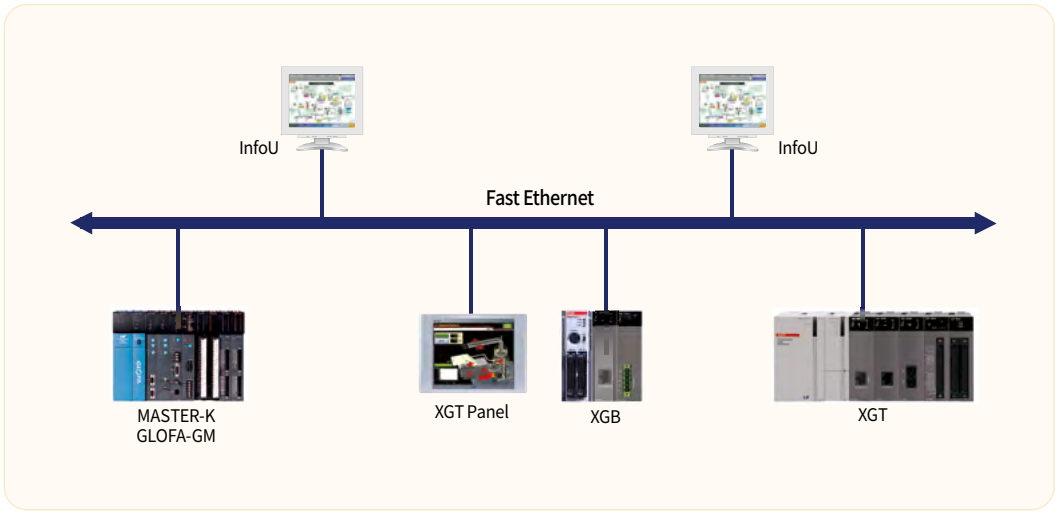

Performance specifications

Category		XBL-EMTA
Communication specification		10/100BASE-TX
Supported protocols		TCP/IP, UDP/IP
Service	LS ELECTRIC PLC connection	High-speed link, P2P service
	Third-party connection	P2P service
	Application	XGT Server/Client, Modbus TCP/IP Server/Client, user-defined communication, remote connection to XG5000
High-speed link Tx/Rx data		200 words/block (max. 64 blocks)
No. of upper-level connections		4 channels
Application		High-speed communication between PC (HMI) / external devices and LS ELECTRIC PLCs
Media		UTP/STP Category 5
Diagnostic function		Can be checked using LEDs and the XG5000 diagnostic service
Max. number of installations *Note 1)		2 modules
Current consumption (mA)		300

*Note 1) Up to two communication modules can be installed in total, including FEnet, Cnet, RAPIEnet, EtherNet/IP, etc.

RAPIEnet features

- Supports IEEE 802.3 and high-speed link for high-speed data communication (up to 64 transmit blocks, up to 128 receive blocks, minimum high-speed-link cycle: 5 ms).
- Provides 100BASE-TX and 100BASE-FX media and supports 100 Mbps full-duplex communication.
- Supports large-capacity data transmission/reception (maximum high-speed-link communication capacity: 12,800 × 2 = 25,600 words).
- Ring and line (daisy-chain) topologies are supported, enabling field-optimized network configurations; redundancy is supported when a ring topology is used.
- The built-in switch function eliminates the need for a separate switch or hub, reducing wiring and improving installation flexibility.
- Auto Cross Over is supported for easier cabling.
- Provides various diagnostic functions and module/network status information, including station-number conflict, CPU-module status, communication-module status, communication-service status, auto scan, packet type, and load diagnostics.
- No IP address setting is required; the module can be configured simply by setting the station number.

Part names

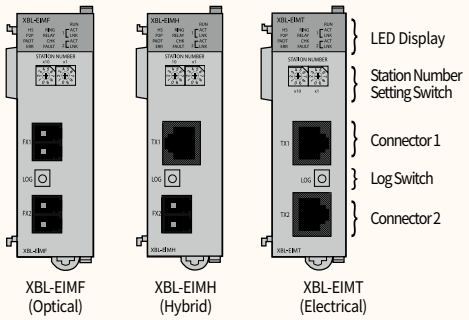

Performance specifications

Item			XBL-EMTA	
			100BASE-FX	100BASE-TX
Transmission Specifications	Transmission speed		100 Mbps	100 Mbps
	Transmission method		Baseband	
	Max. extension distance between nodes		2 Km	100 m
	Max. number of nodes		64	
	Max. protocol size		1,516 bytes	
	Access method		CSMA/CD	
	Frame error check		CRC 32=$X^{32} + X^{26} + X^{23} + \ldots + X^2 + X + 1$	
	Max. number of installations	For PLC	2 modules	
	Normal communication guarantee		Max. 1,200 packets/sec *Note 1)	
Basic Specifications	Dimensions (mm)	For PLC	90(H) × 27(W) × 63(D)	
	Current consumption (mA)	For PLC	Electrical: 280, Optical: 670, Hybrid: 480	
	Weight (g)	For PLC	Electrical: 78, Optical: 98, Hybrid: 95	

*Note 1) For XGB, the data size per second is limited to 10 Kbytes/s. If this limit is exceeded, transmission/reception may not be processed normally. Adjust the network load accordingly.
*Note 2) At initial communication startup, initialization may take up to 2 seconds to check the connected modules. Normal operation may not be available during initialization.

System configuration

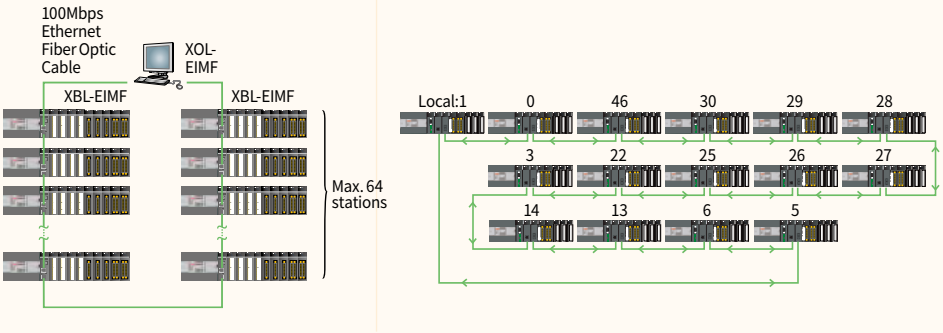

EtherNet/IP features

The XGB EtherNet/IP/F module has the following features.

- Communication: Extensive Client Messaging Support
  - Encapsulated Messages, UCMM Explicit Messaging
  - Class 3 Connected Explicit Messaging(Server Only)
  - Class 1 Connected Implicit(IO) Messaging(Cyclic I/O Service Only)
- Complies with EtherNet/IP Conformance Test Suite, Version 2.10.
- Provides 100BASE-TX media and supports 100 Mbps full-duplex communication.
- Up to two modules can be installed per main unit.
- The built-in switch function eliminates the need for a separate switch or hub, reducing wiring and improving installation flexibility.
- Auto Cross Over is supported for easier cabling.
- Provides various diagnostic functions and module/network status information.
  - Communication module status and communication service status (EIP, aperiodic server).
  - Auto Scan provides information on connected LS ELECTRIC and third-party modules in the network.
  - Displays packet types and data volume received by the communication module (network load can be estimated).
  - Provides communication-module diagnostics over the network.

Performance specifications

Item		Specification
Transmission speed		100 Mbps
Transmission method		Baseband
Max. extension distance between nodes		100 m
Access method		CSMA/CD
Frame error check		CRC 32 = $X^{32} + X^{26} + X^{23} + \cdots\cdots + X^2 + X + 1$
Communication medium		UTP/STP Category 5 or higher
Diagnostic function		Module information, service status, media information, Auto Scan, Ping Test
Service	Periodic client	Implicit I/O Client
	Aperiodic client	UCMM Client
	Periodic server	Implicit I/O Server
No. of connections (Client/Server)	TCP	16 / 32
	CIP (I/O communication)	32 / 64
No. of max. services (P2P)		2
Max. number of installations		2
Max. setting data size per block	Periodic client	500 bytes
	Aperiodic client	512 bytes
Media		UTP/STP Category 5
Basic specifications	Dimensions (mm)	90(H) × 27(W) × 60(D)
	Current consumption (mA)	290
	Weight (g)	102

LED names and descriptions

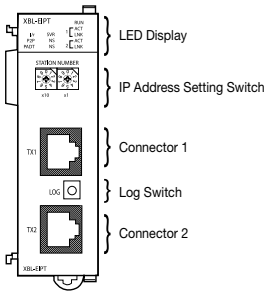

Module Front View

Silkscreen	LED Status	Description
RUN	ON	Power ON and program operating normally
	OFF	Power OFF or abnormal program operation
I/F	Flashing	Normal interface operation with CPU
	ON/OFF	Abnormal interface operation with CPU
P2P	ON	P2P service configured
	OFF	P2P service disabled
PADT	ON	XG5000 remote connection active
	OFF	XG5000 remote connection disconnected
SVR	ON	External client connected
	OFF	No external client connected
MS	Green ON	Normal operation
	Green flashing	Device configuration is not complete
	Red flashing	Invalid configuration or recoverable error
	Red ON	Unrecoverable error
	Red/Green flashing	Self-diagnosis in progress
NS	Green flashing	No device connection
	Green ON	At least one device connection exists
	Red flashing	One or more devices have timed out
	Red ON	Duplicate IP address detected
	Red/Green flashing	Self-diagnosis in progress
nACT	Flashing	Frame transmission/reception (n=1,2)
nLNK	ON	Network link established (n=1,2)
	OFF	Network link not established (n=1,2)

Profibus-DP (XBL-PMEC, XBL-PSEA)

Profibus-DP features

- Supports DP-V0.
- Uses VPC3+ (Profichip) Stack.
- Transmission speeds: 9.6/19.2/93.75/187.5/500k, 1.5/3/6/12M.
- Parameter setting and diagnostic functions are provided using XG5000 (Ver. 4.00 or later).
- Maximum communication data size: 244 bytes transmitted, 244 bytes received.
- Maximum number of modules per main unit: 2.
- Supported models: XBC-U, XBC-H, XBC-SU, XEC-H, XEC-SU, XBM.



System configuration

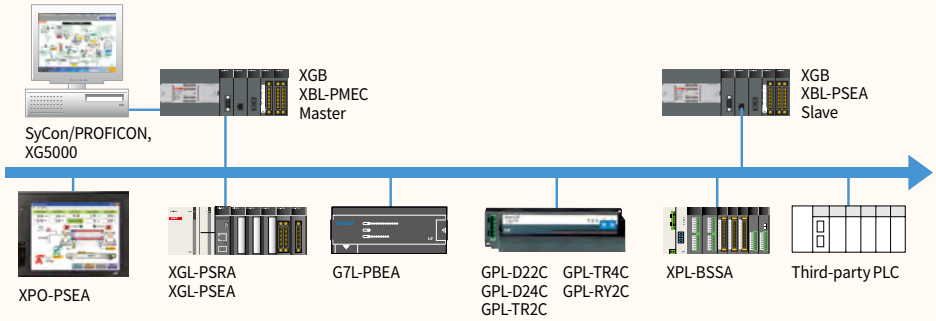

Performance specifications

		XBL-PMEC	XBL-PSEA
Module Type		Master	Slave
Network Type		Profibus-DP	
Interface		RS-485 (Electrical)	
Topology		Bus	
Modulation Type		NRZ (Non Return to Zero)	
Supported Protocol		Profibus DP-V0	
Max. Distance and Transmission Speed	Distance (m)	Transmission Speed (bps)	
	1,200	9.6k / 19.2k / 93.75k / 187.5k	
	400	500k	
	200	1.5M	
	100	3M / 6M / 12M	
Max. Stations per Segment		32 stations (including master and repeater)	
High-Speed Link Tx Cycle		10 / 20 / 50 / 100 / 200 / 500 ms, 1 / 5 / 10 s	
Max. Number of Modules per Main Unit		2 modules	
Internal Current Consumption (mA)		300	250
Weight (g)		86 (including connector: 122)	85 (including connector: 120)

Expansion Communication Modules >> Rnet (XBL-RMEA)

Rnet features

- LS ELECTRIC proprietary network
- Convenient parameter setting using the XG5000 integrated tool
- Reduced wiring and easy installation
- Rnet systems can be configured with Smart I/O
- Supports 1 Mbps communication
- One master can control up to 31 slave stations

System configuration

Configuration of XBL-RMEA with Smart I/O

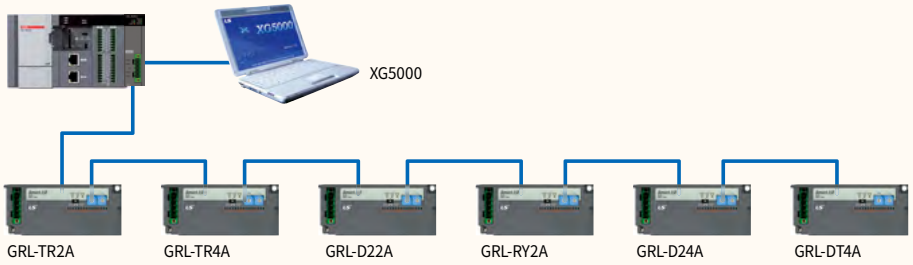

Mixed Configuration with XBL-RMEA

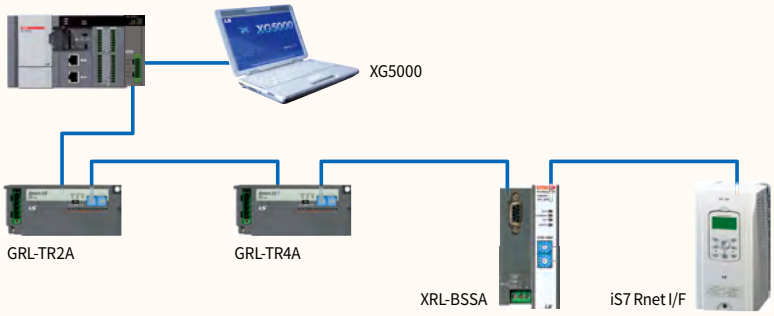

Performance specifications

Item		Specifications
Transmission speed		1 Mbps (common specification for all Rnet modules)
Max. transmission distance		Max. 750 m
Cable		Twisted Pair Shielded Cable
Max. number of stations	Network	Up to 32 stations can be connected in one network • 1 master station (station No. fixed to 0) • Up to 31 slave stations (station No. 1–63) * Only one master station is allowed in one network.
Diagnostic function		XG5000 (High-speed Link Monitoring)
Terminal resistance		110 Ω (±5%), 1/2 W
Master/Slave operation		Master
Communication information	Data processing unit	Byte
	Tx/Rx cycle	20 ms, 50 ms, 100 ms, 200 ms (default), 500 ms, 1 s, 5 s, 10 s
	Max. communication points	3,720 bytes = 31 stations × 120 bytes/station
	Max. number of blocks	64 blocks (block No. 0–63)
	Max. points per block	120 bytes
	Auto scan	Supported
Basic specifications	Max. number of modules	2 modules

Rnet Repeater (GOL-RR8T)

Rnet features

- LS ELECTRIC proprietary network
- Reduced wiring and easy installation
- Various system configurations through network segmentation
- Supports long-distance communication
- Supports communication with up to 64 stations, including the master



System configuration

Mixed Configuration of XBL-RMEA + 2 Repeaters + Rnet Slaves

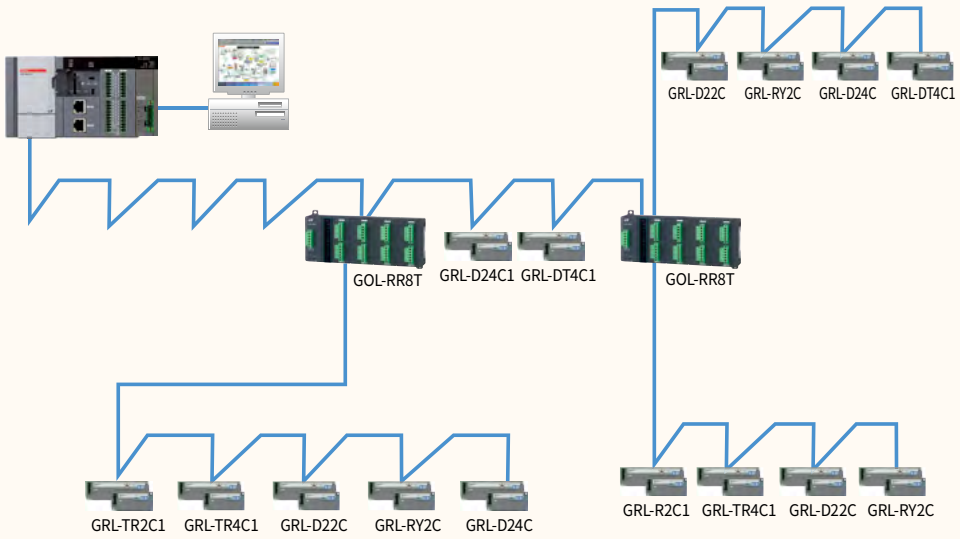

Performance specifications

Item		Specifications
Communication method		Rnet
Communication ports (Master : Slave)		1 : 8
Max. slave stations per repeater / total		32 stations
Max. repeaters per network (Repeaters can be connected only on branches)		2 repeaters
Transmission speed		1 Mbps
Max. transmission distance per repeater port	LIREV-AMESB 1P×22AWG (7/0.254), _LS cable	300 m
	CAN Bus Drag Chain, UL (1×2×0.34 mm²), _Helukabel	600 m
Max. master transmission distance (Master + Slave or Master + Repeater)		750 m
Max. network transmission distance (Master + Repeater + Slave)		LIREV-AMESB 1P×22AWG: 1.05 km CAN Bus Drag Chain: 1.35 km

Expansion Communication Modules >> DeviceNet (XBL-DSEA)

DeviceNet features

- Open network compatible with various third-party master modules
- Supports multi-drop and T-branch connections
- Station number (MAC ID) can be set from 0 to 63 using XG5000
- Communication speed can be set to 125, 250, or 500 kbps



System configuration

System Using LS ELECTRIC DeviceNet I/F Module

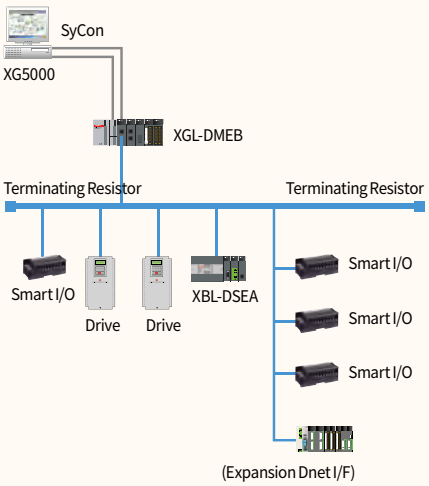

System Using LS ELECTRIC DeviceNet Master I/F Module with Mixed LS ELECTRIC / Third-party Slaves

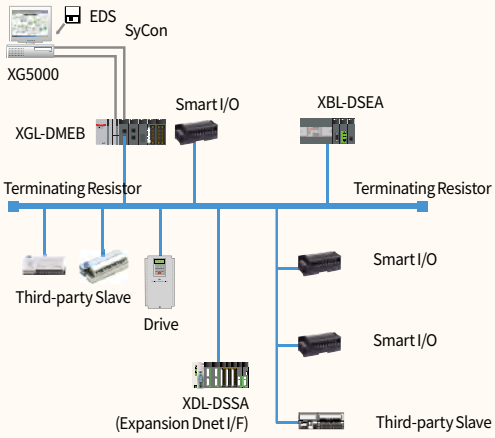

Performance specifications

Item			Specifications
Transmission Specifications	Transmission Speed (kbps)		125 / 250 / 500
	Transmission Type		Poll, Bit strobe, COS, Cyclic
	Communication Distance (m)	Thick Cable	500 (125 kbps) / 250 (250 kbps) / 100 (500 kbps)
		Thin Cable	100 (125 / 250 / 500 kbps)
	Terminal Resistance (Ω)		121 Ω (tolerance: ±1%, 1/4 W)
	Max. Drop Length (m)	125 kbps	6 (max. extended length: 156)
		250 kbps	6 (max. extended length: 78)
		500 kbps	6 (max. extended length: 39)
	Data Packet		0–8 Bytes
	Message Access Control		CSMA/NBA
	Network Structure		• Trunk / Drop Line • Power / signal cable in the same network cable
	Max. Number of Nodes		Up to 64 (including master), MAC IDs (MAC Identifier)
	System Features		Nodes can be inserted or removed while power is ON
Operating Voltage			DC 24 V
Diagnostic Function			Module: Checks duplicate station numbers / CRC errors XG5000: High-Speed Link Monitoring
Master/Slave Operation			Slave only
Parameter Setting			Set in XG5000 High-Speed Link (CPU RS-232C port or USB port)
XG5000 (High-Speed Link)	Data Processing Unit		Byte
	Tx/Rx Cycle		10 ms, 20 ms, 50 ms, 100 ms, 200 ms, 500 ms, 1 s, 5 s, 10 s
	Max. Communication Points		Tx 2,048 points, Rx 2,048 points, 256 bytes each
	Max. Number of Blocks		64 (setting range: 0–63)
	Max. Points per Block		1,024 points (64 words)
	Max. Number of Modules		2 modules
Basic Specifications	Internal Current Consumption (mA)		Module: 100 mA, 5-pin connector DC24V: 50 mA
	Weight (g)		110

CANopen features

- Open network for industrial control equipment, supported by CiA (CAN in Automation)
  - Transmission method: CSMA/BA (Carrier Sense Multiple Access/Bitwise Arbitration)
  - Complies with the CANopen (CiA DS301) specification
- Up to two modules can be installed per main unit
- Supports selectable communication speeds of 10, 20, 50, 100, 125, 250, 500, 800, and 1000 kbps
- Supports connection of up to 32 slaves and provides various diagnostic functions and status information
- Provides various diagnostic functions and module/network status information
  - Provides master/slave communication status through device diagnostics
  - Auto Scan provides information on LS ELECTRIC and third-party modules connected to the network
  - Displays the 10 most recent error records (XBL-CSEA)

System configuration

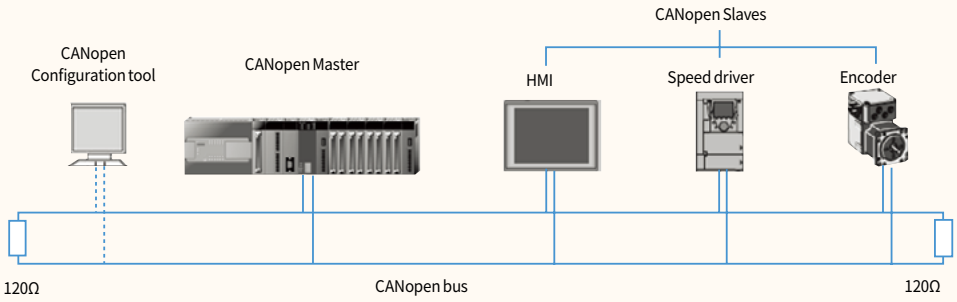

Performance specifications

Item		Performance Specifications	
		XBL-CMEA	XBL-CSEA
Transmission Speed		10, 20, 50, 100, 125, 250, 500, 800, 1000kbps	
Number of CANopen Ports		1	
Max. Number of Nodes		32	-
Supported PDOs	TPDO	Total 32	64
	RPDO		64
Max. Data Size per PDO		8 Byte	
PDO Transfer Type		Synchronous acyclic (0), synchronous cyclic (1–240), RTR (252–253),time-event trigger (254–255)	
Supported SDO		Client 127 / Server 1	Server 1
SDO Transfer Type		Expedited, Normal	
Access Method		CSMA/BA (Carrier Sense Multiple Access/Bitwise Arbitration)	
Topology		BUS	
SYNC Service		Producer support, cycle: 20–5000 ms	Consumer support
NMT Node Control		NMT Master support	NMT Slave support
Emergency		Stores up to the latest 5 events per slave	Stores the latest 10 events
NMT Error Control		Heartbeat, Life Guarding support	Heartbeat support
Network Scan		Supported	-
Dimensions (mm)		90(H) × 27(W) × 60(D)	
Current Consumption (mA)		211	202
Weight (g)		78	

XG5000 programming software

Programming S/W
XG5000

- Enhanced user convenience with customizable fonts, colors, shortcut keys, and toolbars.
- Enhanced editing functions including Undo, Redo, and Excel-style editing.
- Supports structured programs, including scan tasks and tasks such as initialization, periodic, external contact, and internal device tasks.
- Powerful monitoring functions including special module monitoring, trend monitoring, and user event monitoring.
- Parameter setting for all communication modules.
- Parameter setting for basic and high-speed links.
- System diagnostics and monitoring.
- Ping/Test functions. -Tx/Rx frame monitoring.
- Status and diagnostic information for each module.

- XGT PLC programming and debugging tool.
- Easy operation utilizing Windows-based functionality.
- Various monitoring and diagnostic functions.
- Manages multiple PLCs, multiple tasks, and multiple programs within a single project.
- Supported environment: Windows 2000, XP, Vista, Win7, Win8 (32/64-bit). Limited use is available on Windows 98 and ME.



Computer requirements

Item	Specifications
Operating Environment	Windows 2000, XP, Vista, Win7, Win8 (32/64-bit)(Limited use on Windows 98 and ME)
Supported PC	IBM-compatible PC with Pentium III or higher / 200 MHz or higher
Memory	System RAM: 128 MB or more
HDD	100 MB or more free space
Serial Port	1 communication port for program transfer (RS-232C, USB)
Printer Support	Printer supported in Windows 98 or later
Recommendation	1 mouse operable in Windows 98 or later

Programming environment

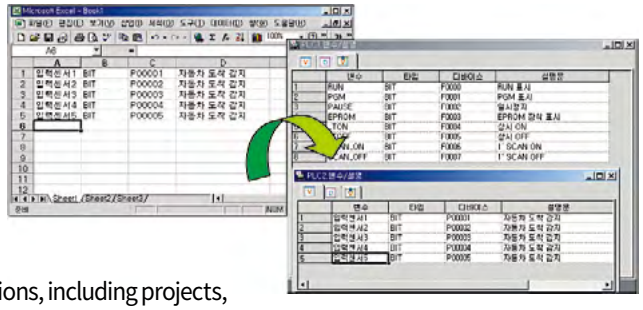

- Cell-type input window eliminates the need for a separate input window.
- Cell-based editing.
- Auto Fill function.
- Compatible with Microsoft Excel.
- Unlimited Redo and Undo.
- Split-screen editing.
- Supports Drag & Drop.
- Drag & Drop is supported in most functions, including projects, variables/descriptions, ladder editing, and variable monitoring.
- User-defined shortcut keys.
- Frequently used functions can be assigned to user-defined shortcut keys for easier editing.
- Remote connection via Cnet communication and Ethernet.
- Up to 32 main units can be accessed remotely using RS-485 communication.

Remote Connection via RS-485 Communication

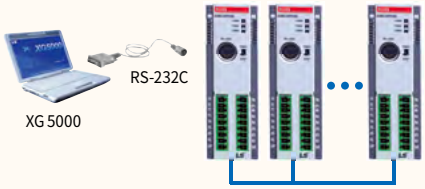

Remote Connection via Ethernet

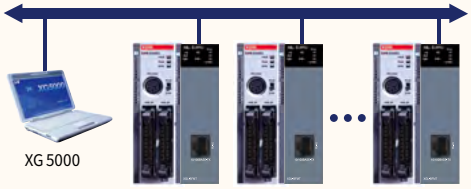

Enhanced monitoring functions

Special Module Monitor



By selecting the module to be monitored, you can view various types of special-module information, including settings and current values, and perform commissioning.

Trend Monitor

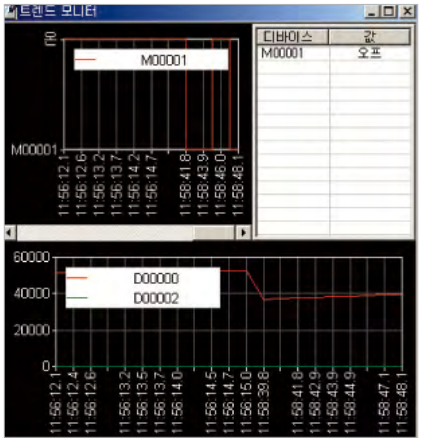

Real-time values of specific devices can be monitored and saved to a file.

Device Monitor

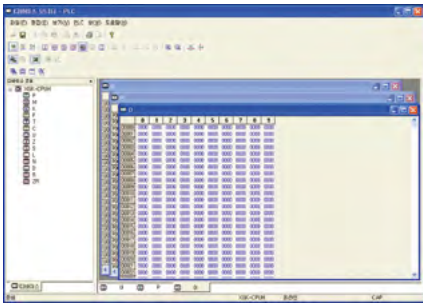

Variable Monitor

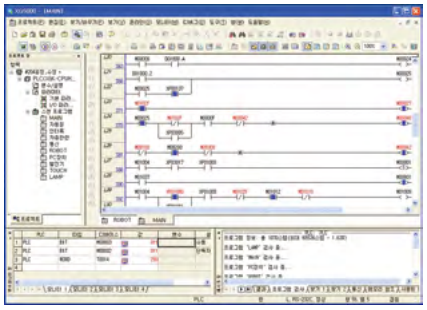

APPLICATION

Network environment

- Convenient network setup and diagnostics.
- Simple network configuration and user programming.
- Provides enhanced monitoring functions for network systems and communication modules.
- Fast interface with the CPU through efficient network management.
- Provides a unified command system through P2P service.
- Supports XGT protocol and Modbus-RTU/ASCII.
- Communication modules can be controlled using the software reset function.
- Provides various built-in diagnostic functions, including CPU status, link status, service status, and frame monitoring.

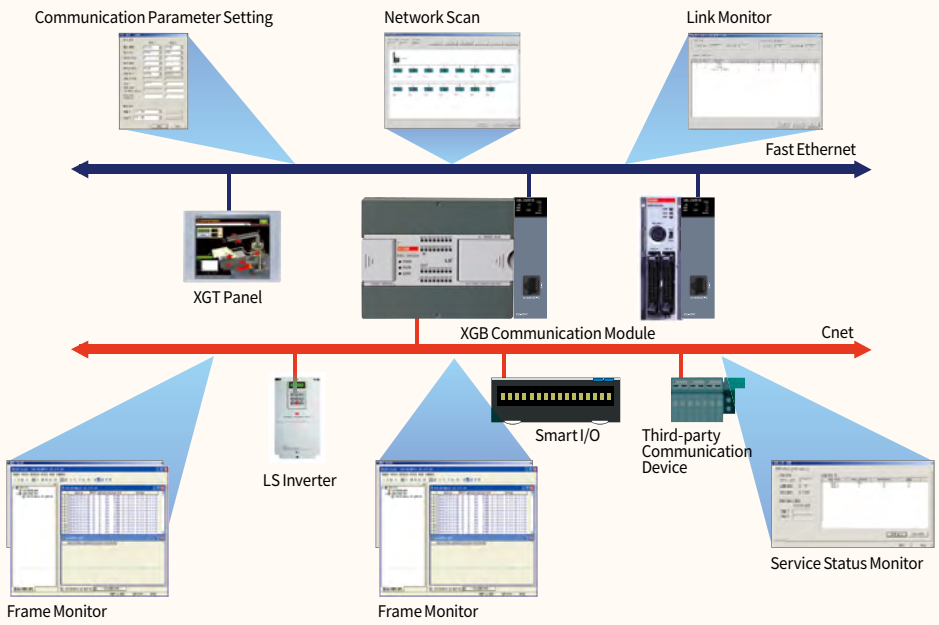

XGT Panel iXP2 Series

Features

- Aluminum body frame, responsive touch screen.
- Easy-to-use Multi-touch, gesture, dual screen, portrait mode.
- Multiple connections via two-channel Gigabit Ethernet between PCs and PLCs.
- Various interfaces : USB host /device, SD card, HDMI.
- High resolution : 1024 X 768
- IP66, UL type 4x, NEMA 4x standards
- Explosion proof. IECEx, ATEX, KCs



Performance specifications

Item		iXP2-0800A/D	iXP2-1000A/D	iXP2-1200A/D	iXP2-1500A/D
Display type		TFT Color LCD			
Screen size		8.4″	10.4″	12.1″	15″
Display resolution		800×600	1,024×768		
Color indication		24-bit color (16.7M colors)			
Backlight		LED method, automatic On / Off support			
Backlight lifetime		40,000 hours			
Touch panel		Capacitive Touch			
Audio output		Magnetic buzzer (85dB)			
Processor		1GHz, Dual core			
Memory	Drawing Memory	1GByte			
	Operating RAM	1GByte			
	Backup RAM	1Mbyte			
Backup Data		Date / Time data, Logging / Alarm / Recipe data, Non-volatile devices			
Battery Life		CR2032(3.0V/210mAh, About 3years/25°C)			
Video Out		1 × HDMI			
Ethernet		1 × 10Base-T/100Base-TX, 1 × 10Base-T/100Base-TX/1000Base-T			
USB host		3 x USB 2.0 (Front × 1, Rear x 2)			
USB device		1 × USB 2.0 (Send / Receive front, PC and project data etc.)			
RS-232C		1 × RS-232C (DSUB 9 / Male type)			
RS-422/485		1 × RS-422/485 (Terminal block)			
Multi-language		Can display 12 languages simultaneously			
Animation		GIF format support			
Recipe		Support			
Data logging		Support			
Script launcher		Support			
Standard certification		CE, KC, UL, IECEx, ATEX, KCs			
Protection standard		IP66, Conform to the UL type 4x, NEMA 4x standard			
Explosion proof		iXP2-xxxxA/D-EX : Ex nA IIC T5 Gc, Ex tc IIIC T100°C Dc IP64			
Dimensions (mm)		240×180×60	271×212×60	313×239×60	395×294×66
Panel cut (mm)		228.5×158.5	259.0×201.0	301.5×227.5	383.5×282.5
Power		iXP2-xxxxA : AC100 / 240V, iXP2-xxxxD : DC24V			
Power consumption (W)		25	25	30	30
Weight (Kg)		1.87	2.35	3.0	4.6

XGT Panel eXP2 Series

Features

Fully compatible with eXP

- Panel cut, interface, design, and drawing file are 100% compatible.

Superior Performance

- ARM Cortex A8 800MHz, eMMC 4G, DDR3

Enhanced product reliability

- LCD Backlight lifespan extended
- Non Battery Type NVRAM

Variety of interfaces and functions

- Various communication drivers and Micro SD I/F available



Performance specifications

Item		eXP2-04□*0D	eXP2-05□*0D	eXP2-05□*2D	eXP2-07□*0D	eXP2-07□*1D	eXP2-07□*2D	eXP2-10□*0D	eXP2-10□*1D
Display Type		TFT Color LCD							
Screen Size		10.9cm (4.3")	14.2cm (5.6")		17.8cm (7")			25.9cm (10.1")	
Display Resolution		480×272	640×480		800×480			1024×600	
Color Indication		24Bit Color (16.7M)	18Bit Color (262,144)		24Bit Color (16.7M)			24Bit Color (16.7M)	
Indication Degree		Left/Right : 60° Upper: 40° Lower: 50°	Left/Right : 60° Upper: 40° Lower: 60°		Left/Right : 70° Upper: 50° Lower: 70°			Left/Right : 70° Upper: 50° Lower: 70°	
Backlight		LED Type (Supports Backlight Auto-off Function)							
Backlight Duration		50,000 Hours	20,000 Hours		50,000 Hours			30,000 Hours	
Touch Panel		4-Wire Resistive, Analog							
Audio Output		Magnetic Buzzer (85dB)							
Process		800MHz							
Memory	Drawing Memory	64MB							
	Operating RAM	512MB							
	Backup RAM	128KB							
Backup Data		Date/Hour Data, Logging/Alarm/Recipe Data and Nonvolatile Device							
Battery Life		Approx. 3 years (at an ambient temperature of 50 °C)							
Ethernet		1 Channel, IEEE802.1a, 10Base-T/100Base-TX		-	1 Channel, IEEE802,1a, 10Base-T/100Base-TX		-	1 Channel, IEEE802.1a, 10Base-T/100Base-TX	
USB Host		1 Channel, USB 2.0 Host (Mouse, keyboard, printer, USB flash drive, etc.)							
USB Device		-	1 Channel, USB 2.0 Device (for Download and Upload Project)					1 Channel, USB 2.0 Device (for Download and Upload Project File)	
Micro SD Card		-	-		-	1 Channel SDHC Class10	-	-	1 Channel SDHC Class10
COM1		-	-		RS-485 (DSUB 9/Male type)			RS-485 (DSUB 9/Male type)	
COM2		RS-232C (DSUB 9/Male type)							
COM3		RS-422/485 (DSUB 9/Male type)	RS-422/485 (DSUB 9/Male type)		RS422/485 (Terminal block)			RS422/485 (Terminal block)	
Multi-language		Up to 12 Language Simultaneously							
Animation		GIF Format is Available							
Recipe		Available							
Data Logging		Available							
Script Executor		Available							
Certifications		CE, UL(cUL), UL Type 4X, KC		CE, UL(cUL), KC	CE, UL(cUL), UL Type 4X, KC		CE, UL(cUL), KC	CE, UL(cUL), UL Type 4X, KC	
Protection Standard		IP65 Note 1)	IP65 Note 1)		IP65 Note 1)			IP65 Note 1)	
Dimension (mm)		128×102×32.5	165×132.5×36.1		208×154×44.4			276×218×35.1	
Panel Cut (mm)		119×93	156×123.5		192×138			260×202	
Rated Voltage		DC24V	DC24V		DC24V			DC24V	
Power Consumption (W)		4	5.5	5.5	6			6	
Weight (kg)		0.27	0.43	0.43	0.59	0.59	0.58	1.0	1.0

□* : 0 (WinCE 7.0 Core), 1(WinCE 7.0 Pro)
Note 1) : IP66 for UL Type 4X models.

XGT Panel XP 10

Features



Enhanced user convenience

- Uses a 192 × 64-dot graphic LCD to improve screen-design flexibility.
- Uses O/S and font download methods for easier version upgrades.
- Provides various tag and drawing functions for user convenience.
- Provides 1,000 words of internal memory for convenient data processing.
- Supports user-defined function key settings for each screen (◀, ▶, ▲, ▼).
- Supports user-defined bitmap file input.
- Supports upload/download by memory area.
- Built-in RTC: B type.
- Large-capacity screen memory: 256K.

Flexible power supply

- 5 V power can be supplied through the loader port when connected to LS ELECTRIC PLCs or inverters.
- 24 V power can be supplied through the power input terminal.

Supports multiple languages

- Uses a font download method supporting English, Korean, and Chinese.

Performance specifications

Category	Specifications		Related Specifications
	XP10BKA / DC	XP10BKB / DC	
Input Power	5 VDC direct supply (RS-232C port), 24 V power supply (DC power input terminal)		For details on 5 VDC, refer to the manual.
Display	LED Back-Light (192 × 64 Dot)		
Communication Interface	RS-232C, RS-422/485		Can be used independently.
Screen Memory Capacity	256 Kbyte		
Supported Languages	English supported by default; Korean/Chinese selectable by download		
Built-in RTC	No	Yes	
Download Specification	115,200 bps; segmented download by memory area		
Key Configuration	12 keys (F1–F4, ESC, ALM, ▲, ▼, ◀, ▶, SET, ENT)		
Internal Data Area	User Area	000–899 (900 words)	For XP10BKB/DC, a latch area can be configured.
	System Flag	900–999 (100 words)	

Components

Category	Model	Specifications
Main Unit	XP10BKA /DC	4.1-inch, Mono, RS-232C, RS-422/485
	XP10BKB /DC	4.1-inch, Mono, RS-232C, RS-422/485, RTC

Category	Model	Application
Software	Panel-Editor	Screen editing software for XGT Panel

Product List

Product lineup

Item			Model	Specifications	Remark
Basic Unit	Compact Type	"U" Type	XBC/XEC-DN(P)32U	AC 110-220V, 16 points DC24V input, 16 points transistor sink(source) type output	Max. 10 expansion modules (including up to 2 high-speed expansion modules) Option module not supported
			XBC/XEC-DR28U	AC 110-220V, 16 points DC24V input, 12 points relay output	
			XBC/XEC-DN(P)32UP	AC 110-220V, 16 points DC24V input, 16 points transistor sink(source) type output, 4 axes built-in positioning	
			XBC/XEC-DR28UP	AC 110-220V, 16 points DC24V input, 12 points relay output, 4 axes built-in positioning	
			XBC/XEC-DN(P)32UA	AC 110-220V, 16 points DC24V input, 16 points transistor sink(source) type output, 8-channel built-in analog	
			XBC/XEC-DR28UA	AC 110-220V, 16 points DC24V input, 12 points relay output, 8-channel built-in analog	
			XBC/XEC-DN(P)32U/DC	DC 24V, 16 points DC24V input, 16 points transistor sink(source) type output	
			XBC/XEC-DR28U/DC	DC 24V, 16 points DC24V input, 12 points relay output	
			XBC/XEC-DN(P)32UP/DC	DC 24V, 16 points DC24V input, 16 points transistor sink(source) type output, 4 axes built-in positioning	
			XBC/XEC-DR28UP/DC	DC 24V, 16 points DC24V input, 12 points relay output, 4 axes built-in positioning	
			XBC/XEC-DN(P)32UA/DC	DC 24V, 16 points DC24V input, 16 points transistor sink(source) type output, 8-channel built-in analog	
			XBC/XEC-DR28UA/DC	DC 24V, 16 points DC24V input, 12 points relay output, 8-channel built-in analog	
		"H" Type	XBC/XEC-DR32H	AC 100-240V, 16 points DC24V input, 16 points relay output	Max. 10 expansion modules Option module not supported
			XBC/XEC-DR64H	AC 100-240V, 32 points DC24V input, 32 points relay output	
			XBC/XEC-DN32H	AC 100-240V, 16 points DC24V input, 16 points transistor output (Sink)	
			XBC/XEC-DN64H	AC 100-240V, 32 points DC24V input, 32 points transistor output (Sink)	
			XEC-DP32H	AC 100-240V, 16 points DC24V input, 16 points transistor output (Source)	
			XEC-DP64H	AC 100-240V, 32 points DC24V input, 32 points transistor output (Source)	
			XBC-DR32H/DC	DC 24V, 16 points DC24V input, 16 points relay output	
			XBC-DR64H/DC	DC 24V, 32 points DC24V input, 32 points relay output	
			XBC-DN32H/DC	DC 24V, 16 points DC24V input, 16 points transistor output (Sink)	
			XBC-DN64H/DC	DC 24V, 32 points DC24V input, 32 points transistor output (Sink)	
			XEC-DR32H/D1	DC 12/24V, 16 points DC12/24V input, 16 points relay output	
			XEC-DR64H/D1	DC 12/24V, 32 points DC12/24V input, 32 points relay output	
		"SU" Type	XBC/XEC-DR20SU	AC 100-240V, 12 points DC24V input, 8 points relay output	Max. 7 expansion modules Option module supported
			XBC/XEC-DR30SU	AC 100-240V, 18 points DC24V input, 12 points relay output	
			XBC/XEC-DR40SU	AC 100-240V, 24 points DC24V input, 16 points relay output	
			XBC/XEC-DR60SU	AC 100-240V, 36 points DC24V input, 24 points relay output	
			XBC/XEC-DN20SU	AC 100-240V, 12 points DC24V input, 8 points transistor output (Sink)	
			XBC/XEC-DN30SU	AC 100-240V, 18 points DC24V input, 12 points transistor output (Sink)	
			XBC/XEC-DN40SU	AC 100-240V, 24 points DC24V input, 16 points transistor output (Sink)	
			XBC/XEC-DN60SU	AC 100-240V, 36 points DC24V input, 24 points transistor output (Sink)	
			XBC/XEC-DP20SU	AC 100-240V, 12 points DC24V input, 8 points transistor output (Source)	
			XBC/XEC-DP30SU	AC 100-240V, 18 points DC24V input, 12 points transistor output (Source)	
			XBC/XEC-DP40SU	AC 100-240V, 24 points DC24V input, 16 points transistor output (Source)	
			XBC/XEC-DP60SU	AC 100-240V, 36 points DC24V input, 24 points transistor output (Source)	
		"E" Type	XBC/XEC-DR10E	AC 100-240V, 6 points DC24V input, 4 points relay output	Expansion not supported Option module supported
			XBC/XEC-DR14E	AC 100-240V, 8 points DC24V input, 6 points relay output	
			XBC/XEC-DR20E	AC 100-240V, 12 points DC24V input, 8 points relay output	
			XBC/XEC-DR30E	AC 100-240V, 18 points DC24V input, 12 points relay output	
			XBC/XEC-DN10E	AC 100-240V, 6 points DC24V input, 4 points transistor output (Sink)	
			XBC/XEC-DN14E	AC 100-240V, 8 points DC24V input, 6 points transistor output (Sink)	
			XBC/XEC-DN20E	AC 100-240V, 12 points DC24V input, 8 points transistor output (Sink)	
			XBC/XEC-DN30E	AC 100-240V, 18 points DC24V input, 12 points transistor output (Sink)	
			XBC/XEC-DP10E	AC 100-240V, 6 points DC24V input, 4 points transistor output (Source)	
			XBC/XEC-DP14E	AC 100-240V, 8 points DC24V input, 6 points transistor output (Source)	
			XBC/XEC-DP20E	AC 100-240V, 12 points DC24V input, 8 points transistor output (Source)	
			XBC/XEC-DP30E	AC 100-240V, 18 points DC24V input, 12 points transistor output (Source)	
	Modular Type		XBM/XEM-DN32H2	DC24V, 16 points DC24V input, 16 points transistor output, built-in positioning 2 axes (XPM)	Max. 7 expansion modules (including up to 2 high-speed expansion modules) Option module not supported
			XBM/XEM-DN32HP	DC24V, 16 points DC24V input, 16 points transistor output, built-in positioning 6 axes (XPM)	
			XBM/XEM-DP32H2	DC24V, 16 points DC24V input, 16 points transistor output (Source), built-in positioning 2 axes (XPM)	
			XBM/XEM-DP32HP	DC24V, 16 points DC24V input, 16 points transistor output (Source), built-in positioning 6 axes (XPM)	
			XBM-DN32H	DC24V, 16 points DC24V input, 16 points transistor output, built-in positioning 2 axes (APM)	
			XBM-DR16S	DC24V, 8 points DC24V input, 8 points relay output	Max. 7 expansion modules Option module not supported
			XBM-DN16S	DC24V, 8 points DC24V input, 8 points transistor output	
			XBM-DN32S	DC24V, 16 points DC24V input, 16 points transistor output	

Product lineup

Item		Model	Specifications	Remark
Expansion Unit	I/O Module	XBE-DC08/16*D/32A,DC16B	DC24V input 8/16/32 points, DC12/24V input 16 points	-
		XBE-RY08/16A*D, RY08B	Relay output 8/16 points, relay output 8 points (high-capacity)	-
		XBE-TN08/16*D/32A	Transistor (sink) output 8/16/32 points	-
		XBE-DR16A	DC24V input 8 points, relay output 8 points	-
		XBE-TP08/16*D/32A	Transistor (source) output 8/16/32 points	-
		XBE-DN32A	DC24V input 16 points, transistor output 16 points	-
	Special Module	XBF-AD04A*D	Current/voltage input 4 ch, voltage DC 0-10V, current 0-20mA, 4-20mA (0-4,000)	-
		XBF-AD04C	Analog current/voltage input 4 ch, resolution 1/16,000	-
		XBF-AD08A	Current/voltage input 8 ch, voltage DC 1-5V, 0-5V, 0-10V, current 0-20mA, 4-20mA (0-4,000)	-
		XBF-DC04A*D	Current output 4 ch, DC 4-20mA, 0-20mA (0-4,000)	-
		XBF-DC04C	Analog current output 4 ch, resolution 1/16,000	-
		XBF-DV04A	Voltage output 4 ch, DC 0-10V (0-4,000)	-
		XBF-DV04C	Analog voltage output 4 ch, resolution 1/16,000	-
		XBF-AH04A	Current/voltage input 2 ch, current/voltage output 2 ch, DC 1-5V, 0-5V, 0-10V, 4-20mA, 0-20mA (0-4,000)	-
		XBF-RD04A	RTD input 4 ch, Pt100, JPt100, -200 to 600°C	-
		XBF-RD01A	RTD input 1 ch, Pt100, JPt100, -200 to 600°C	-
		XBF-TC04S	Thermocouple input 4 ch, thermocouple K/J/T/R types (0-65,535)	-
		XBF-TC04TT	Temperature controller, thermocouple	-
		XBF-TC04RT	Temperature controller, RTD	-
		XBF-LD02S	Load cell input	-
		XBF-PD02A	Positioning module, 2 axes (line drive), max. output 2 Mbps, connection distance 10 m	-
		XBF-PN08B	EtherCAT positioning module, 8 axes	For XBC/XEC U and XBM/XEM H/H2/HP only
		XBF-PN04B	EtherCAT positioning module, 4 axes	
		XBF-HO02A	High-speed counter, open collector, 2 channels	-
		XBF-HD02A	High-speed counter, line drive, 2 channels	-
	Communication Module	XBL-C41A	Cnet (RS-422/485) I/F, 1 channel	-
		XBL-C21A	Cnet (RS-232C) I/F (module communication), 1 channel, max. 115,200 bps	-
		XBL-EMTA	Fast Ethernet I/F, TCP/IP, UDP/IP, high-speed link, P2P service	-
		XBL-EIPT	Fast EtherNet/IP I/F, max. station-to-station distance 100 m, 100 Mbps	-
		XBL-EIMT	RAPIEnet I/F (electrical/electrical), max. station-to-station distance 100 m (electrical 2 ch), 100 Mbps	-
		XBL-EIMF	RAPIEnet I/F (optical/optical), max. station-to-station distance 2 km (optical 2 ch), 100 Mbps	-
		XBL-EIMH	RAPIEnet I/F (electrical/optical), electrical 1 ch, optical 1 ch, 100 Mbps	
		XBL-PMEC	Profibus-DP, Master, RS-485	-
		XBL-PSEA	Profibus-DP, Slave, RS-485	-
		XBL-DSEA	DeviceNet, Slave	-
		XBL-RMEA	Rnet, Master	-
		GOL-RR8T	Rnet repeater hub module	-
		XBL-CMEA	CANopen Master, 1000 kbps, PDO: 32	-
		XBL-CSEA	CANopen Slave, 1000 kbps, PDO: 64	-
	Option Module	XBO-M2MB	Memory module (USB supported), 2 Mbyte, Flash Memory, Read/Write	-
		XBO-DC04A	DC input (high-speed counter function built in when installed on standard type), 4 points/COM, high-speed counter 2 kpps/2 channels	-
		XBO-TN04A	TR output (pulse output function provided when installed on standard type), 4 points/COM, positioning, 10 kpps/2 axes	-
		XBO-RTCA	RTC module (used on "E" and "S(U)" types without built-in battery backup function)	-
		XBO-AD02A	Analog current/voltage input 2 ch, DC 0-10V, 4-20mA, 0-20mA (0-4,000)	-
		XBO-DA02A	Analog current/voltage output 2 ch, DC 0-10V, 4-20mA, 0-20mA (0-4,000)	-
		XBO-AH02A	Current/voltage input 1 ch, current/voltage output 1 ch, voltage DC 0-10V, current 4-20mA, 0-20mA (0-4,000)	-
		XBO-RD01A	RTD input 1 ch, Pt100, JPt100, -200 to 600°C	
		XBO-TC02A	Thermocouple input 2 ch, thermocouple K/J types	-

*D: For D-type connector-change models (e.g., XBE-DC08D), refer to page 133 for external dimensions.

Loader Cable Wiring diagram

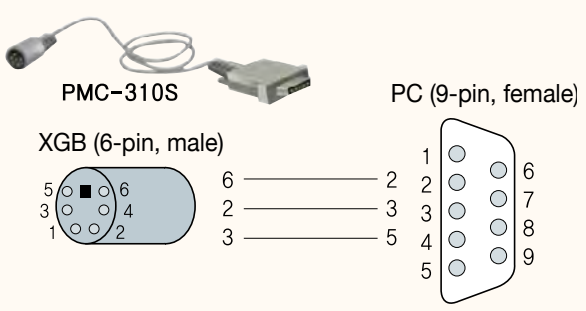

APPLICATION

Dimensions

XBC/XEC DN32U

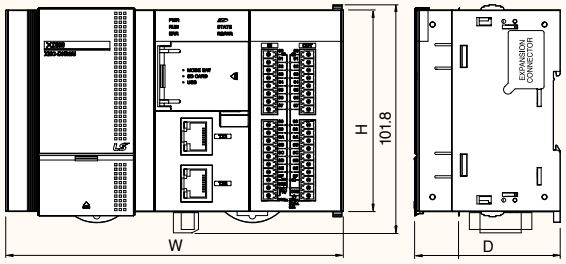

XBM H

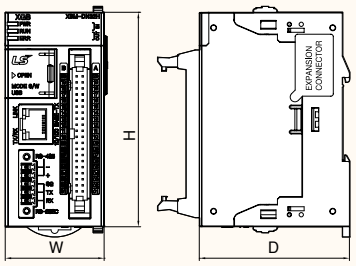

XBC/XEC DR32H

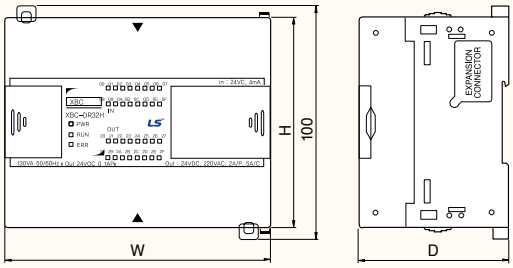

XBM DN16S

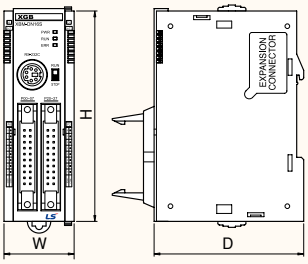

(Unit: mm)

Category	Type	Model	W	H	D
Basic Module	XBC/XEC “U”	DN, DR 32U	150	90	64
		DN, DR 32UP	185		
		DN, DR 32UA	185		
	XBC/XEC “H”	DR(N/P)32H	114		
		DR(N/P)64H	180	90(100)	64
	XBC/XEC “SU”	DR, DN, DP 20/30SU	135		
		DR, DN, DP 40SU	161		
		DR, DN, DP 60SU	210		
	XBC/XEC “E”	DR, DN, DP 10/14E	100		
		DR, DN, DP 20/30E	135		
	XBM H	DN32H, DN32HP2, DN32HP	41.5	90	
	XBM(Slim)	DR16S, DN16S, DN32S	30	90(100)	
Expansion Module	Expansion I/O	DC32A	20	90	63
		TN32A			
		TP32A			
		DC08A			
		DC16A(B)			
		DC08/16D, TN08/16D, TP08/16D, RY08/16D, AD04D, DC04D, DV04D	27	90	85.75
	Special Module	TN08A	20	90	63
		TN(P) 16A			
		Special Module			
	Expansion I/O (Relay Type)	DR16A / RY16A / RY08A(B)			
	Communication Module	EIPT / EIMT/F/H / EMTA C41A, C21A, CMEA, CSEA, PMEC	27	90	63

Smart Link

	XBF-PD02A	XBF-HO02A	XBF-HD02A	XBE-DC32A	XBE-TN32A	XBE-TP32A	XBM-DN16S	XBM-DN32S	XBM-DN32H	XBM/XEM-DN32HP(HP2)	XBB-UP	Cable length
R40H/20HH-05S-XBM3							●	●				0.5m
R40H/20HH-10S-XBM3							●	●				1m
C40HH-05SB-XBI	●	●	●	●	●	●			●	●	●	0.5m
C40HH-10SB-XBI	●	●	●	●	●	●			●	●	●	1m
C40HH-15SB-XBI	●	●	●	●	●	●			●	●	●	1.5m
C40HH-20SB-XBI	●	●	●	●	●	●			●	●	●	2m
C40HH-30SB-XBI	●	●	●	●	●	●			●	●	●	3m
C40HH-05SB-XBE					●	●						0.5m
C40HH-10SB-XBE					●	●						1m
C40HH-15SB-XBE					●	●						1.5m
C40HH-20SB-XBE					●	●						2m
C40HH-30SB-XBE					●	●						3m
C40HH-05SB-XBE					●							0.5m
C40HH-10SB-XBE					●							1m
C40HH-15SB-XBE					●							1.5m
C40HH-20SB-XBE					●							2m
C40HH-30SB-XBE					●							3m

SOLUTION SQUARE

EVERYTHING ABOUT **AUTOMATION ENGINEERING**



SOLUTION SQUARE provides technical information and training materials across a wide range of automation technologies.

SOLUTION SQUARE

Engineering Software-associated Services

Linked with Automation Software

Users can access graphic libraries and samples in the engineering software in a few clicks.



Simple Software Updates

Check the latest information and keep your software up-to-date .



Quick and Easy Search for Automation Technologies

Getting Effective Search Results

Quick and easy search for up-to-date content of products and technologies



Mobile Friendly

Optimized for web and mobile



Search SOLUTION SQUARE on Google. Visit at sol.ls-electric.com

Headquarter
127 LS-ro (Hogye-dong) Dongan-gu, Anyang-si, Gyeonggi-Do, 14119, Korea

Seoul Office
LS Yongsan Tower, 92, Hangang-daero, Yongsan-gu, Seoul, 04386, Korea
TEL: 82-2-2034-4916, 4684, 4429

C/Montcada 7, Pol. Ind. Les Pereres
08130 Santa Perpètua de Mogoda
Barcelona - Spain

Tel. +34 935 748 206
info@vectorenergy.com
www.vectorenergy.com

Specifications in this catalog are subject to change without notice due to continuous product development and improvement

©2006. 06 LS ELECTRIC Co., Ltd. All rights reserved. English (32) 2026. 10 HumanPower